TABLE 1		
P/N	MODEL NUMBER	"L1"
807607	MQDEC-STP-501SS	305[12]
807608	MQDEC-STP-503SS	910[35.83]
807609	MQDEC-STP-506SS	1830[72.05]
807610	MQDEC-STP-515SS	4580[180.31]

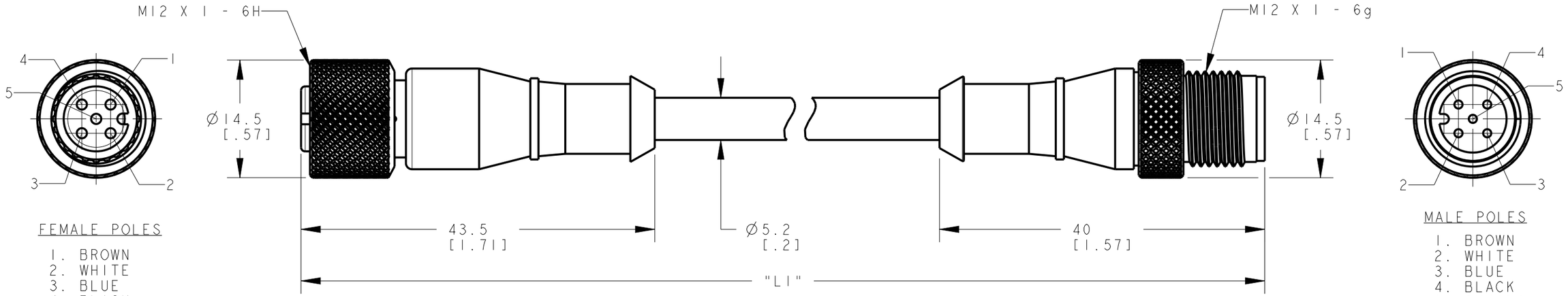

FEMALE POLES

1. BROWN
2. WHITE
3. BLUE
4. BLACK
5. SHIELD

MALE POLES

1. BROWN
2. WHITE
3. BLUE
4. BLACK
5. SHEILD

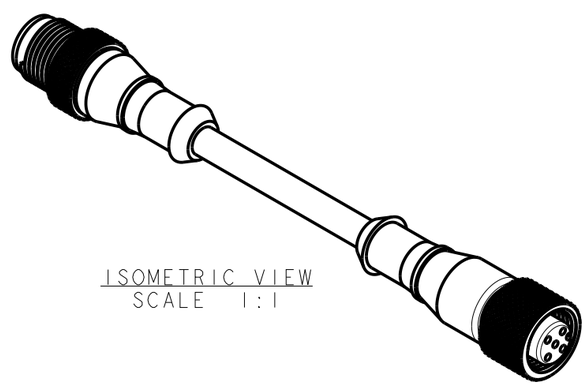

ISOMETRIC VIEW
SCALE 1:1

NOTES:
1. ALL DIMENSIONS ARE MILLIMETERS [INCHES] UNLESS OTHERWISE NOTED.
2. REFER TO "www.bannerengineering.com" FOR ADDITIONAL DATA AND SPECIFICATIONS.

This drawing is the property of BANNER ENGINEERING CORP. Any use or reproduction, in any form, without prior written permission of Banner is prohibited.
© 2015 Banner Engineering Corp.

THIRD ANGLE PROJECTION

BANNER ENGINEERING CORP.
www.bannerengineering.com

TITLE

MQDEC-STP

SIZE	DRAWING NO.	REV.
B	212608	A
SCALE 2:1	SHEET 1 OF 1	

CREO

ПРОМЭЛЕКТРОНИКА/ sales@prom-elec.com