# Features

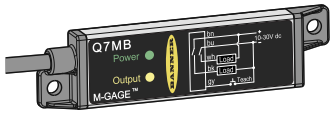


- Capable of detecting vehicles that have stopped within the sensor's sensing field
- 3-axis magnetoresistive-based technology; senses 3-dimensional changes to the Earth's magnetic field caused by the presence of ferrous objects
- Easy sensor installation
- Compact, robust one-piece, self-contained sensor package replaces inductive-loop sensing technology; no external controller is needed
- Designed to minimize the effects of temperature swings and destabilizing magnetic fields
- Sensor learns ambient background and stores settings and does not lose the configuration or range when power is cycled
- US Patent # 6,546,344 B1

**WARNING:**

- **Appropriate use for vehicle detection**—The mechanical opening, braking, and reversing systems of the door will not respond in sufficient time to prevent moving trucks, cars, or material handling vehicles, even those traveling at low speeds, from coming in contact with the door. In addition, the detection zone of the device may fluctuate due to changes in the local magnetic environment.
- Failure to follow these procedures may result in serious injury or death.
- All vehicles should approach doors at speeds that allow the operator to ensure the door is operating properly and in an open position.

**WARNING:**

- **Do not use this device for personnel protection**
- Using this device for personnel protection could result in serious injury or death.
- This device does not include the self-checking redundant circuitry necessary to allow its use in personnel safety applications. A device failure or malfunction can cause either an energized (on) or de-energized (off) output condition.

# Models

| Model | Cable[1] | Cable Type | Supply Voltage | Output Type | Range |
|---|---|---|---|---|---|
| **Q7MB** | 1.98 m (6.5 ft) cable | 26 gauge/5-wire shielded cable with 4 mm (0.160 in) diameter polyethylene jacket | 10 to 30 V DC | Bipolar NPN/ PNP[2] | Range varies depending on application and target being sensed.<br>See "Typical Target Excess Gain Curves" on page 6. |
| **Q7MB W/15** | 4.57 m (15 ft) cable | | | | |
| **Q7MB W/30** | 9.14 m (30 ft) cable | | | | |
| **Q7MB W/50** | 15.2 m (50 ft) cable | | | | |
| **Q7MB W/100** | 30.5 m (100 ft) cable | | | | |
| **Q7MBQ** | 150 mm (5.9 in) cable with a 5-pin M12 quick disconnect | 26 gauge/5-wire cable with PVC jacket | | | |

# Overview

The Q7M sensors implement a passive sensing technology to detect large ferrous objects. The sensor measures the change in the Earth's natural magnetic field (the ambient magnetic field) caused by the introduction of a ferromagnetic object.

The Q7M sensors provide an alternative to inductive loop systems.

**Mount the Q7M above-ground.**

**Theory of Operation**. The sensor uses three mutually perpendicular magnetoresistive transducers. Each transducer detects magnetic field changes along one axis. By incorporating three sensing elements, maximum sensor sensitivity is achieved.

[1] Other cable lengths are available - up to 61 m (200 ft); consult factory for more information. A model with a QD connector requires a mating cable; see "Cordsets" on page 8.
[2] Consult factory for other output options.

Original Instructions
17-Jan-25

© Banner Engineering Corp. All rights reserved.

117172
p/n: 117172 Rev. G

ПРОМЭЛЕКТРОНИКА/ sales@prom-elec.com

*Baseline magnetic field (A), with slight disturbances caused by permanent ferrous-metal objects within or near the sensor.*

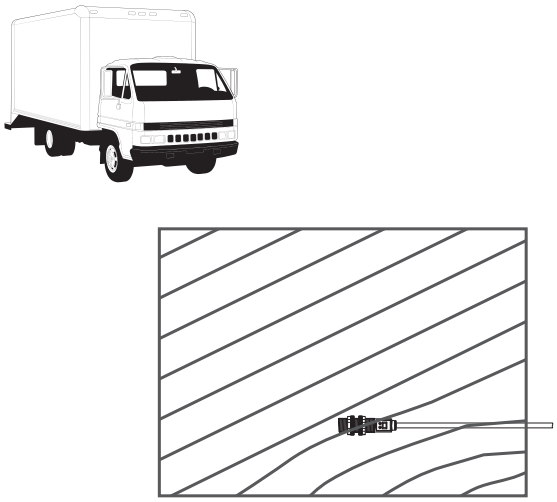

A ferrous object will alter the local (ambient) magnetic field surrounding the object. The magnitude of this magnetic field change is dependent both on the object (size, shape, orientation, and composition) and on the ambient magnetic field (strength and orientation).

During a simple programming procedure, the Q7M measures the ambient magnetic field. When a large ferrous object (for example, a truck, automobile, or rail car) alters that magnetic field, the sensor detects the magnetic field changes (anomalies). When the degree of magnetic field change reaches the sensor's threshold, the sensor's discrete outputs switch.

**Sensor Field of View and Range**. The Q7M can detect changes in the ambient magnetic field in all directions. As with other sensors, the range will depend on the target. The strong disturbance of a large ferrous object decreases as the distance from the sensor increases, and the magnitude and shape of the disturbance is dependent on the object's shape and content.

*Introduction of Large Steel Object (B)*

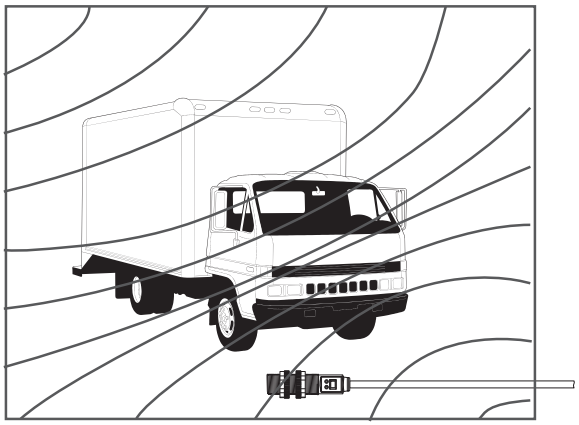

After a large steel target object is introduced, the sensor detects the differential (magnetic strength and orientation) between fields A and B. If the differential is greater than the sensitivity threshold, the sensor's outputs conduct.

The sensor can be programmed to react to magnetic field disturbances of greater or lesser intensity using two adjustments: background condition and sensitivity level. After the background condition and sensitivity level are set, the sensor is ready to detect the target object. Both settings are stored in non-volatile memory.

**NOTE:** The Q7M will continue to sense a vehicle in its sensing field, even when the vehicle is stopped.

**TIP:** Sensor may be mounted inside a non-ferrous architectural detail for cosmetic or security reasons. It is important that, wherever it is mounted, the sensor is securely attached during configuration and all later use. If the sensor moves after being taught, detection errors may occur and sensor must be re-taught. If a sensor appears to lose its taught settings, it may be a result of having shifted position after setup.


© Banner Engineering Corp. All rights reserved.

# Installation

The Q7M is non-directional, and can be mounted in any position. The sensor may be mounted inside a non-ferrous architectural detail for cosmetic or security reasons.

*Installation using the mounting holes in the sensor's end caps*



The end caps provide mounting holes at either end of the sensor. The sensor can be mounted to any desired surface (for example, cement or metal). Select a location as close as possible to the vehicle(s) to be detected.

In applications where the sensor is mounted to the side of the vehicle traffic lane (for example, in a kiosk, menu board, or gate control box), consideration must be made for movement of metallic objects within a few feet of the sensor on the opposite side of the traffic lane, even if the activity is not visible (for example, behind a wall or inside a building). Consult Banner Applications Engineer for further information.

When mounting a QD-cable model, it is recommended to route the cable through conduit for protection from environmental conditions. The integral cable does not need such protection.

Verify the sensor is securely attached during configuration and operation. If the sensor moves after being taught, detection errors may occur and the sensor must be re-taught. If a sensor appears to lose its taught settings, the sensor may have shifted position after configuration.

**Install the sensor above ground.**

> **NOTE:** The models listed in this datasheet are not intended to be installed below ground because of inherent installation and environmental variability. Contact Banner Engineering for models designed for below ground installations.

## Installation Placement Considerations

*Example good sensor placement*

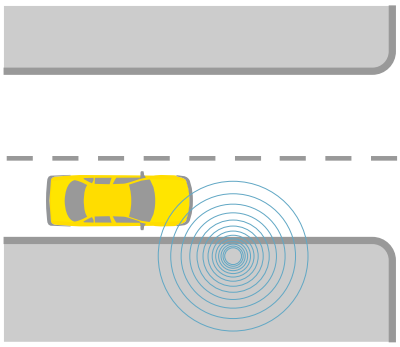

**Good Placement**— This installation shows an example of appropriate M-GAGE sensor placement for vehicle detection. The sensor is placed at the edge of a traffic lane to detect the vehicle in the nearest lane. This type of placement is often used for a kiosk, menu board, or gate control box.

Continued on page 4


© Banner Engineering Corp. All rights reserved.

Continued from page 3

*Example bad sensor placement*

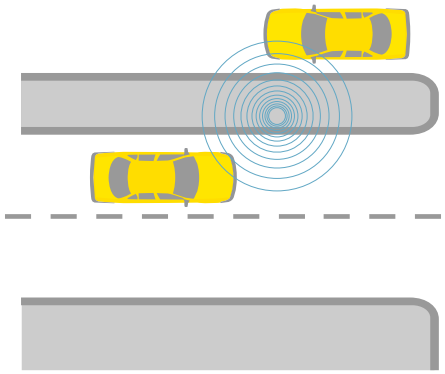

**Bad Placement**— This installation depicts a potential problem installation. While mounting the sensor at the side of a lane may be successful, this mounting location increases the potential for detection problems. To reliably detect a vehicle from the side, the sensor sensitivity must be increased to see objects further away in the lane of interest. Unfortunately, this enables the sensor to also detect another object operating behind the sensor or vehicles in adjacent lanes, which will cause false counts.

Place the M-GAGE sensor at the edge of a traffic lane only if there is no possibility of other objects being detected by the sensor. A good practice is to ensure that no vehicles will be within 3.05 m (10 ft) of the sensor on the non-traffic side.

# Sensor Configuration

The sensor is configured via its gray Remote wire. The gray wire is always active and the sensor may be re-configured at any time. **For optimum performance, secure the sensor so that it will not move either during or following the configuration.**

Programming pulses may be executed by connecting the sensor's gray wire to the sensor's blue (common) wire with a normally open mechanical button connected between them, or as a low (< 2 V DC) signal from a programmable logic controller (PLC), or using the model DPB1 Portable Programming Box, as shown. When a PLC is used for configuration, the pulses are acknowledged via the sensor output signal.

When the DPB1 is used, the pulses are accomplished by clicking the DPB1 **TEACH** push button (0.04 seconds ≤ click ≤ 0.8 seconds). The sensor's output status is reflected by the DPB1 Output indicator LED.

*Sensor features*

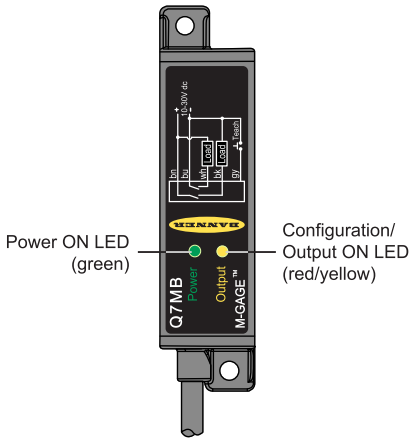


*Connecting to the model DPB1 Portable Programming Box*

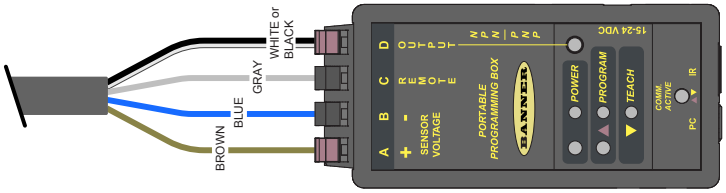


**Push the TEACH button to pulse the remote wire.**

# Configuration

**Set Background Condition (No Vehicle Present)**

Wire the M-GAGE™ sensor as directed. Remove all vehicles and all other metal objects that are temporarily in the sensing area before setting the background condition.



© Banner Engineering Corp. All rights reserved.

| Configuration (0.04 ≤ T ≤ 0.8 seconds) | | Result |
|---|---|---|
| **Set Background** | Single-pulse the remote wire.<br> | Sensor learns background.<br>Output indicator LED flashes approximately 12 times while the background is taught.<br><br>Sensor returns to Run mode. |

**Set Sensitivity Level**

Level 1 = least sensitive, Level 6 = most sensitive.

| Configuration (0.04 ≤ T ≤ 0.8 seconds) | | Result |
|---|---|---|
| **Access Sensitivity Mode** | Double-pulse the remote wire.<br> | Red output LED flashes every 2 seconds to indicate the current sensitivity level; the sensor always begins at sensitivity level 1. |
| **Adjust Sensitivity** | To increase the sensitivity incrementally, single-pulse the remote wire again; continue until the desired sensitivity level is reached.<br> | Output LED flashes from 1 to 6 times every 2 seconds to indicate the sensor's sensitivity level (for example, two flashes indicates level 2). |
| | Double-pulse the remote wire to save the setting.<br>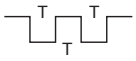 | Sensor returns to Run mode. |
| **Test Operation** | Drive a vehicle past the sensor to trip the output. Use a small/light vehicle to ensure larger vehicles will be detected later. | Verify Output LED comes On as expected. |
| | Adjust the sensitivity as needed. | |
| **Prepare for Operation** | Disconnect DPB1 or other temporary switch used for configuration and connect the sensor to a permanent power supply/output device (user-supplied). See "Wiring" on page 5. | |

# Wiring

| Cabled Model | Quick-Disconnect Model | Pinout |
|---|---|---|
| 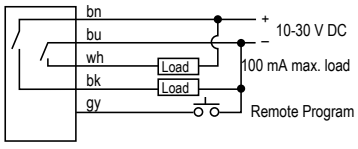 | 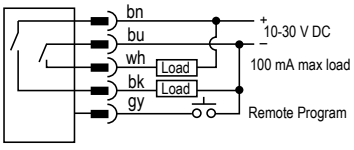 | 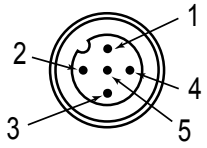<br>1 = Brown<br>2 = White<br>3 = Blue<br>4 = Black<br>5 = Gray |

# Specifications

**Supply Voltage**

10 V DC to 30 V DC (10% maximum ripple) at 43 mA, exclusive of load

Above +50° C (+122° F), supply voltage is 10 V DC to 24 V DC (10% maximum ripple)

**Sensing Range**

See "Typical Target Excess Gain Curves" on page 6

**Sensing Technology**

Passive three-axis magnetoresistive transducer

**Supply Protection Circuitry**

Protected against reverse polarity and transient voltages

**Output Configuration**

Two SPST solid-state outputs conduct when object is sensed; one NPN (current sinking) and one PNP (current sourcing)

**Output Protection**

Protected against short-circuit conditions

**Adjustments**

Configuration of Background Condition and Sensitivity Level may be set by pulsing the gray wire remotely via the portable programming box


© Banner Engineering Corp. All rights reserved.

**Indicators**

Two indicators
Power Indicator: Green
Configuration/Output Indicator: Red/Yellow

**Construction**

Lightpipes: Acrylic
Housing: Anodized aluminum
End Caps: Thermoplastic polyester

**Output Ratings**

100 mA maximum (each output)
NPN saturation: < 200 mV at 10 mA and < 600 mV at 100 mA
NPN OFF-state leakage current: < 200 microamps
PNP saturation: < 1.2 V at 10 mA and < 1.6 V at 100 mA
PNP OFF-state leakage current: < 5 microamps

**Output Response Time**

20 milliseconds

**Delay at Power-Up**

0.5 seconds

**Temperature Effect**

< 0.5 milligauss / ºC

**Remote TEACH Input**

Impedance 12K ohms (low ≤ 2 V DC)

**Connections**

Shielded 5-conductor (with drain) polyethylene jacketed attached cable or 5-pin M12 quick-disconnect PVC pigtail

**Patent**

U.S. Patent 6,546,344 B1

**Environmental Rating**

Leak proof design is rated IEC IP69K; NEMA 6P

**Vibration and Mechanical Shock**

All models meet Mil. Std. 202F requirements method 201A (vibration: 10 to 60 Hz maximum, double amplitude 0.06 inch, maximum acceleration 10G). Also meets IEC 947-5-2: 30G 11 ms duration, half sine wave.

**Operating Conditions**

–40 °C to +70 °C (–40 °F to +158 °F)
100% maximum relative humidity

**Certifications**

Banner Engineering BV
Park Lane, Culliganlaan 2F bus 3
1831 Diegem, BELGIUM

Turck Banner LTD Blenheim House
Blenheim Court
Wickford, Essex SS11 8YT
GREAT BRITAIN

**Required Overcurrent Protection**

**WARNING:** Electrical connections must be made by qualified personnel in accordance with local and national electrical codes and regulations.

Overcurrent protection is required to be provided by end product application per the supplied table.

Overcurrent protection may be provided with external fusing or via Current Limiting, Class 2 Power Supply.

Supply wiring leads < 24 AWG shall not be spliced.

For additional product support, go to www.bannerengineering.com.

| Supply Wiring (AWG) | Required Overcurrent Protection (A) | Supply Wiring (AWG) | Required Overcurrent Protection (A) |
|---|---|---|---|
| 20 | 5.0 | 26 | 1.0 |
| 22 | 3.0 | 28 | 0.8 |
| 24 | 1.0 | 30 | 0.5 |

## FCC Part 15 Class A for Unintentional Radiators

This equipment has been tested and found to comply with the limits for a Class A digital device, pursuant to Part 15 of the FCC Rules. These limits are designed to provide reasonable protection against harmful interference when the equipment is operated in a commercial environment. This equipment generates, uses, and can radiate radio frequency energy and, if not installed and used in accordance with the instruction manual, may cause harmful interference to radio communications. Operation of this equipment in a residential area is likely to cause harmful interference in which case the user will be required to correct the interference at his own expense.

(Part 15.21) Any changes or modifications not expressly approved by the party responsible for compliance could void the user's authority to operate this equipment.

## Industry Canada ICES-003(A)

This device complies with CAN ICES-3 (A)/NMB-3(A). Operation is subject to the following two conditions: 1) This device may not cause harmful interference; and 2) This device must accept any interference received, including interference that may cause undesired operation.

Cet appareil est conforme à la norme NMB-3(A). Le fonctionnement est soumis aux deux conditions suivantes : (1) ce dispositif ne peut pas occasionner d'interférences, et (2) il doit tolérer toute interférence, y compris celles susceptibles de provoquer un fonctionnement non souhaité du dispositif.

## Typical Target Excess Gain Curves

After the sensor has been securely mounted and configured, it is ready to operate. The following example application shows typical responses for the M-GAGE™ sensor.

This example depicts mounting the M-GAGE™ 1 meter (3.3 ft) above the ground to sense an automobile. The graph shows the excess gain for a typical car. Excess gain is a measure of the amount of extra signal detected by the sensor over and above the Level needed to detect the target. This example assumes a Level 5 sensitivity threshold.

The table at right compares the change in excess gain if the sensitivity Level changes. If the sensitivity is at Level 6, then the excess gain at a given distance would be 1.3 times larger than for a Level 5 sensitivity. Conversely, if the sensitivity threshold is Level 1, then the excess gain would be one-third as big as for Level 5.


© Banner Engineering Corp. All rights reserved.

*Excess Gain vs Sensitivity Level (Assumes Level 5)*

| Level | Excess Gain Multiplier |
|---|---|
| 1 | 0.33 |
| 2 | 0.4 |
| 3 | 0.5 |
| 4 | 0.66 |
| 5 | 1.0 (default) |
| 6 | 1.3 |

*Application example: Sensor mounted 1 meter (3.3 ft) above ground*

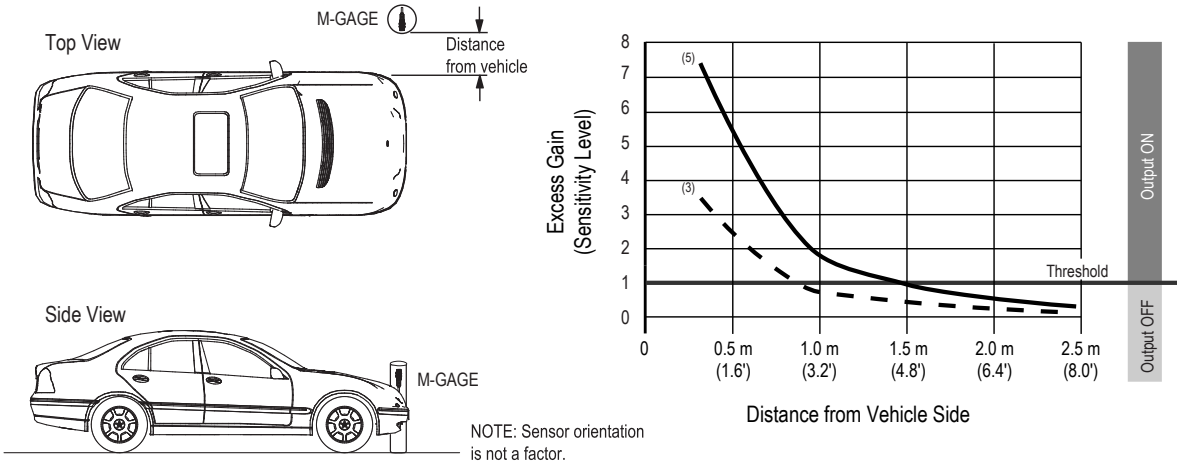


## Q7M Dimensions

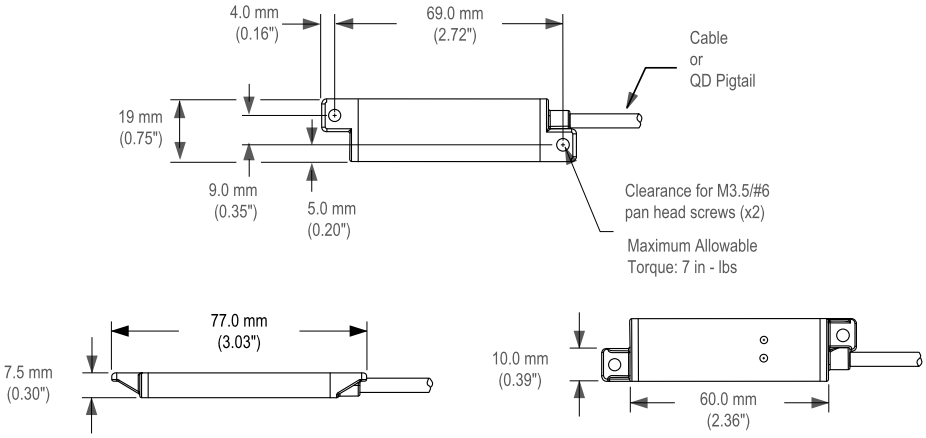


## Accessories

| Model | Description | |
|---|---|---|
| **DPB1** | Handheld Portable Programming Box, used for configuring sensor when the push button is not accessible | 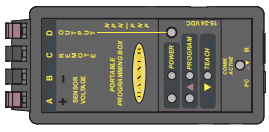 |
| **SP-DPB1** | Optional 115 V AC power supply for DPB1 Handheld Portable Programming Box | |


© Banner Engineering Corp. All rights reserved.

## Cordsets

Quick-disconnect cordsets are not suitable for buried applications.

| 5-Pin Single-Ended M12 Female Shielded Cordsets | | | | |
|---|---|---|---|---|
| **Model** | **Length** | **Style** | **Dimensions** | **Pinout (Female)** |
| **MQDEC2-506** | 2 m (6.56 ft) | Straight | 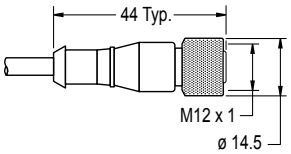 | 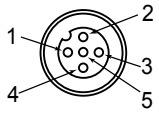<br>1 = Brown<br>2 = White<br>3 = Blue<br>4 = Black<br>5 = Gray |
| **MQDEC2-515** | 5 m (16.4 ft) | | | |
| **MQDEC2-530** | 9 m (29.5 ft) | | | |
| **MQDEC2-550** | 15 m (49.2 ft) | | | |
| **MQDEC2-575** | 23 m (75.44 ft) | | | |
| **MQDEC2-5100** | 30.5 m (100 ft) | | | |
| **MQDEC2-506RA** | 2 m (6.56 ft) | Right-Angle | 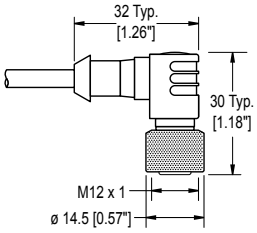 | |
| **MQDEC2-515RA** | 5 m (16.4 ft) | | | |
| **MQDEC2-530RA** | 9 m (29.5 ft) | | | |
| **MQDEC2-550RA** | 15 m (49.2 ft) | | | |
| **MQDEC2-575RA** | 23 m (75.44 ft) | | | |
| **MQDEC2-5100RA** | 31 m (101.68 ft) | | | |

# Banner Engineering Corp Limited Warranty

Banner Engineering Corp. warrants its products to be free from defects in material and workmanship for one year following the date of shipment. Banner Engineering Corp. will repair or replace, free of charge, any product of its manufacture which, at the time it is returned to the factory, is found to have been defective during the warranty period. This warranty does not cover damage or liability for misuse, abuse, or the improper application or installation of the Banner product.

**THIS LIMITED WARRANTY IS EXCLUSIVE AND IN LIEU OF ALL OTHER WARRANTIES WHETHER EXPRESS OR IMPLIED (INCLUDING, WITHOUT LIMITATION, ANY WARRANTY OF MERCHANTABILITY OR FITNESS FOR A PARTICULAR PURPOSE), AND WHETHER ARISING UNDER COURSE OF PERFORMANCE, COURSE OF DEALING OR TRADE USAGE.**

This Warranty is exclusive and limited to repair or, at the discretion of Banner Engineering Corp., replacement. **IN NO EVENT SHALL BANNER ENGINEERING CORP. BE LIABLE TO BUYER OR ANY OTHER PERSON OR ENTITY FOR ANY EXTRA COSTS, EXPENSES, LOSSES, LOSS OF PROFITS, OR ANY INCIDENTAL, CONSEQUENTIAL OR SPECIAL DAMAGES RESULTING FROM ANY PRODUCT DEFECT OR FROM THE USE OR INABILITY TO USE THE PRODUCT, WHETHER ARISING IN CONTRACT OR WARRANTY, STATUTE, TORT, STRICT LIABILITY, NEGLIGENCE, OR OTHERWISE.**

Banner Engineering Corp. reserves the right to change, modify or improve the design of the product without assuming any obligations or liabilities relating to any product previously manufactured by Banner Engineering Corp. Any misuse, abuse, or improper application or installation of this product or use of the product for personal protection applications when the product is identified as not intended for such purposes will void the product warranty. Any modifications to this product without prior express approval by Banner Engineering Corp will void the product warranties. All specifications published in this document are subject to change; Banner reserves the right to modify product specifications or update documentation at any time. Specifications and product information in English supersede that which is provided in any other language. For the most recent version of any documentation, refer to: www.bannerengineering.com.

For patent information, see www.bannerengineering.com/patents.


© Banner Engineering Corp. All rights reserved.