S4BA Q20-2 Mute Arm Sensor Kit

Datasheet

Use the S4BA Mute Arm Sensor Kit to create a mute system with a pair of S4B safety light curtains and a Banner Safety Controller.

The S4BA Mute Arm Sensor Kit is available in three configurations:

- L Configuration
- T Configuration
- X Configuration

L Configuration

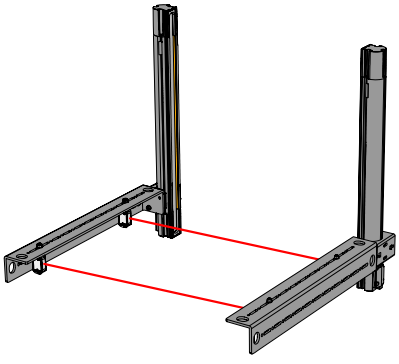

T Configuration

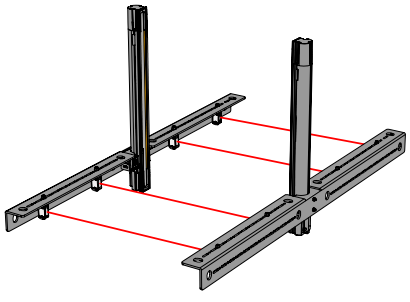

X Configuration

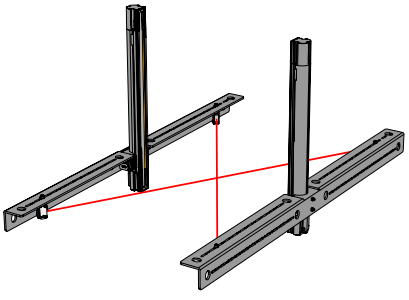

The S4B Mute Arm Sensor Kit can be directly mounted to a flat surface. The kit can also be mounted to the S4B Safety Light Curtain system's mounting brackets, S4BA-MBK-16 (or for the T and X system, directly to a stand). Connect the included Q20-2 sensors and the light curtains to the muting device. The use of an appropriate molded junction block, such as R95-6M125-M128-S4BM, can simplify wiring.

Standard Banner S4BA-Q20-2VPLP-Q5 sensors are installed on the Mute Arm Sensor Kit along with retroreflective targets (reflectors). S4BA-Q20-2VPLP-Q5 sensors are standard Q20-2 sensors, but with a 600 mm cable and quick disconnect. Refer to the Q20-2 datasheet (p/n 227993) for the specifications and more information.

Models

Model	Description	Sensor Arms	Reflector Arms	Q20-2 Sensors[1]	Reflectors[2]
S4BA-ML-LPQ20	S4BA L-Configuration Mute Arm Sensor Kit	1	1	2	2
S4BA-MT-LPQ20	S4BA T-Configuration Mute Arm Sensor Kit	2	2	4	4
S4BA-MX-LPQ20	S4BA X-Configuration Mute Arm Sensor Kit	2	2	2	2

Hardware is included to attach the Q20-2 sensors and reflectors to the mute arms. Hardware to attach the mute arms to the S4B bracket and/or mounting surface is user-supplied.

Mounting Instructions

Use the following instructions to mount the S4BA Q20-2 Mute Arm Sensor Kit using an L mute arm or a T and X mute arm.

M4 mounting hardware is user-supplied.

Mounting the L Mute Arm

Mounting to a S4BA-MBK-16 bracket.

1. Review and follow all mechanical installation considerations in the S4B manual, p/n 230287.
2. Align and mount the S4BA-MBK-16 brackets as described in the *Mounting the S4BA-MBK-16 Side-Mount Bracket* section of the manual. The mute arm can be mounted to one of the brackets that will be used to mount the S4B, or an extra bracket can be used.

[1] Pre-installed on the sensor arms.
[2] Pre-installed on the reflector arms.

Original Instructions
28-Sep-26

© Banner Engineering Corp. All rights reserved.
www.bannerengineering.com

236572
p/n: 236572 Rev. C

ПРОМЭЛЕКТРОНИКА/ sales@prom-elec.com

Mounting the Mute Arm

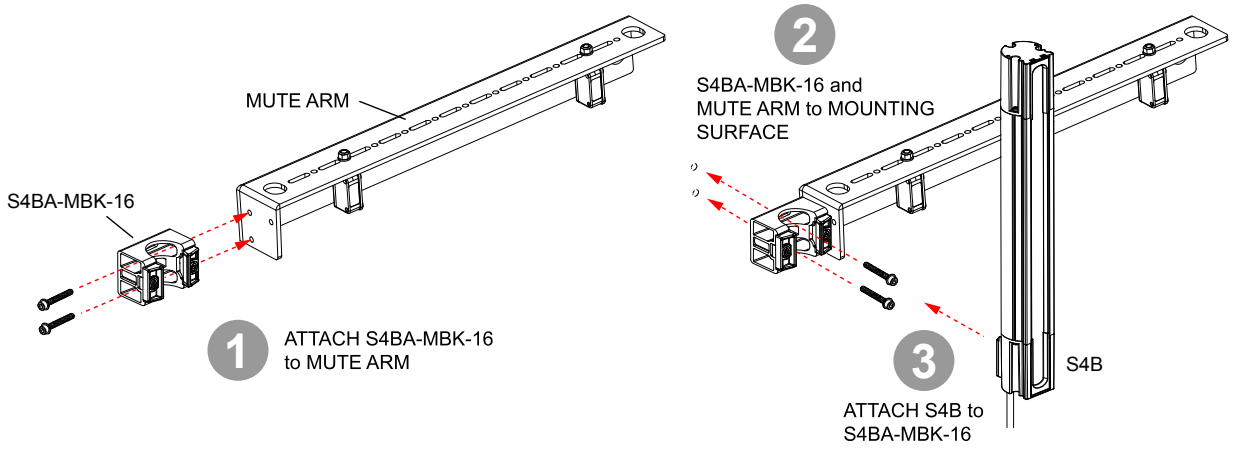

3. Attach the mute arm to the side of the bracket with the user-supplied M4 hardware.
4. Insert the S4B unit into the brackets and finish mounting the S4B.
5. Attach the Q20-2 units and the reflectors to the mute arms with the supplied hardware.

Mount Using T and X Mute Arm

Mount the T and X mute arms in conjunction with the S4BA-MBK-16 brackets or separate from the brackets. This first mounting option is separate from the brackets. The second option is in conjunction with the brackets.

Option 1: Mount Behind the S4B

1. Review and follow all mechanical installation considerations in the S4B manual, p/n 230287.
2. Align and mount the mute arm bracket in the same line as the centerline holes of the S4BA-MBK-16 brackets, as described in the *Mounting the S4BA-MBK-16 Side-Mount Bracket* section of the manual.

Mount Behind the S4B Unit

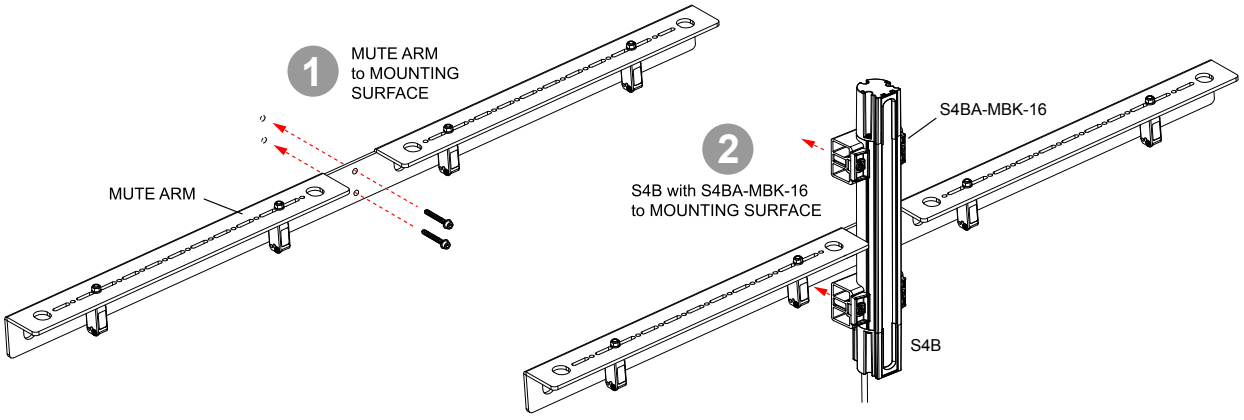

3. Mount the mute arm bracket behind the S4B unit.
4. Place the S4BA-MBK-16 brackets where needed to mount the unit (above or below the mute arm bracket, but not on it).
5. Attach the Q20-2 units and the reflectors to the mute arms with the supplied hardware.

Option 2: Mount with the S4BA-MBK-16

1. Review and follow all mechanical installation considerations in the S4B manual, p/n 230287.
2. Align and mount the mute arm bracket in the same line as the centerline holes of the S4BA-MBK-16 brackets, as described in the *Mounting the S4BA-MBK-16 Side-Mount Bracket* section of the manual.

© Banner Engineering Corp. All rights reserved.
www.bannerengineering.com

Mount with the S4BA-MBK-16 Bracket

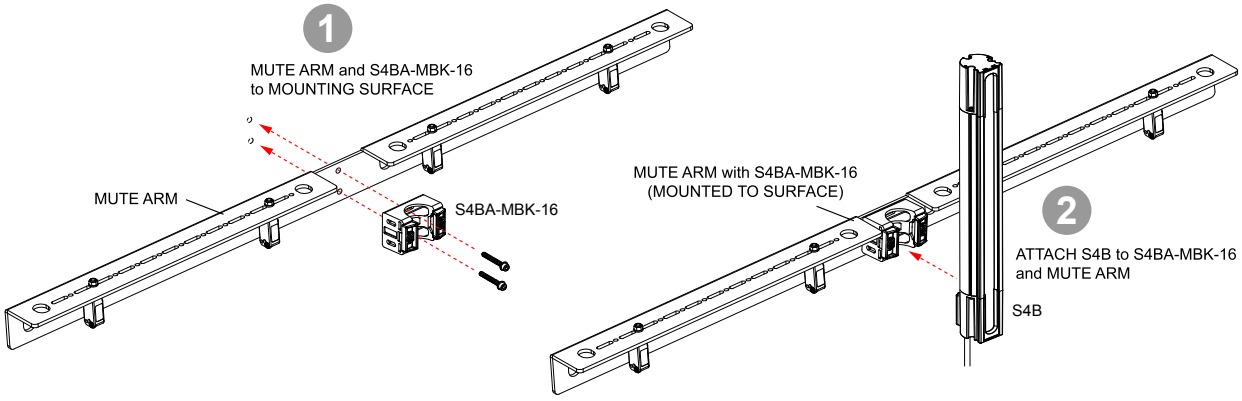

3. Mount the S4BA-MBK-16 bracket and the mute arm bracket by placing the S4BA-MBK-16 on the mute arm bracket and attaching it to the mounting surface.
4. Mount the other S4BA-MBK-16 brackets in line with the mute arm by placing them on the spacer plates included with the Mute Arm Sensor Kit and securing them to the mounting surface.
5. Insert the S4B unit into the brackets and finish the mounting process per the S4B instructions.
6. Attach the Q20-2 units and the reflectors to the mute arms with the supplied hardware.

Alternate Mounting Method

Mount the mute arms directly on a solid surface via the holes and slots in the mute arm bracket.

Wiring

4-pin M12 Male	Pin	Wire Color	Description
	1	Brown	24 V
	2	White	When set to DO, turns on when Q20-2 does not see reflector
	3	Blue	0 V
	4	Black	When set to DO, turns on when Q20-2 sees the reflector

Specifications

Construction

Material: 6 GA. (4 mm) aluminum

Finish: Black anodized

© Banner Engineering Corp. All rights reserved.
www.bannerengineering.com

Dimensions

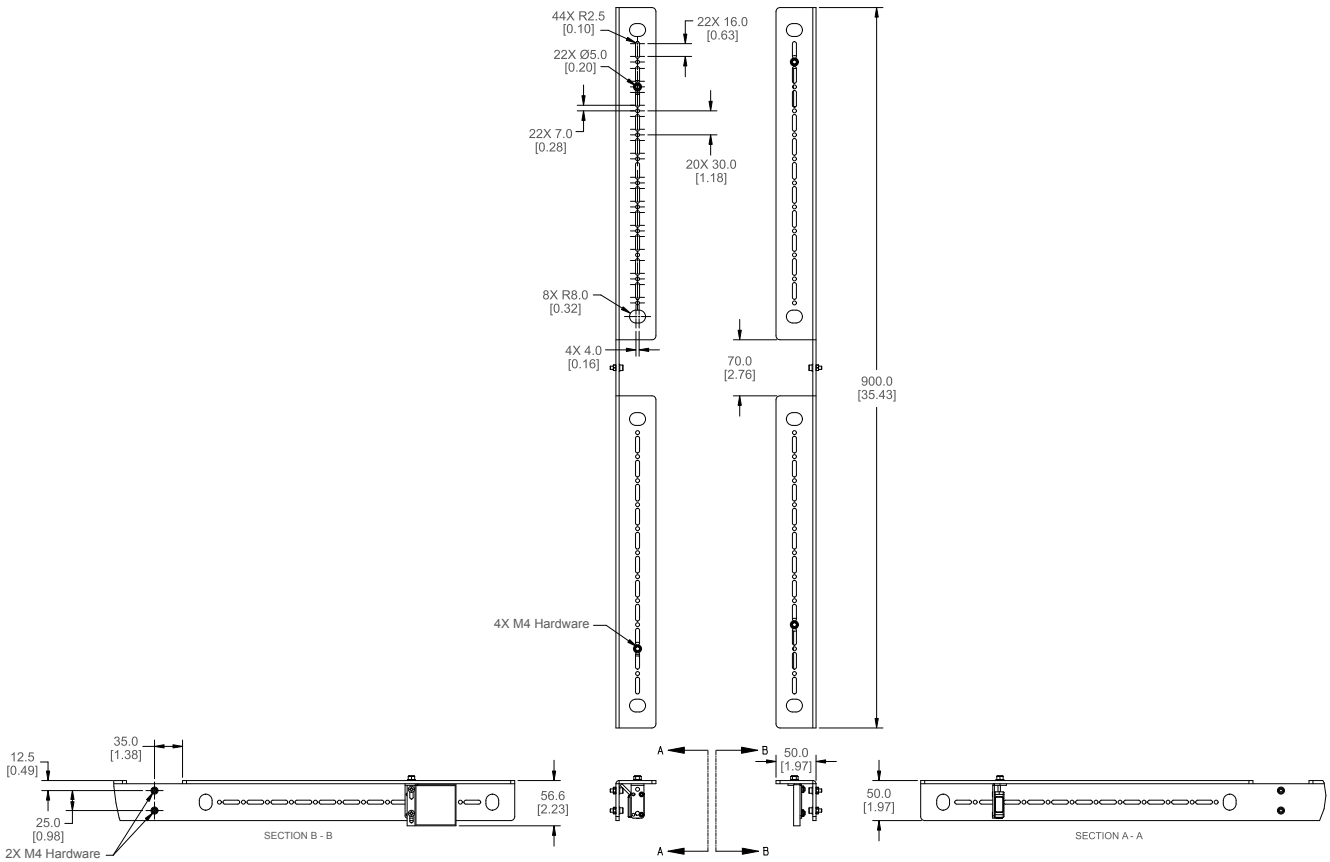

Accessories for the Mute Arm Sensor Kit

Model	Description
R95-6M125-M128-S4BM	Muting connection box
S4BA-Q20-2VPLP-Q5	Q20-2 retroreflective mute sensor with 600 mm cable and M12 quick disconnect connector
BRT-2x2	Retroreflective target (reflector) for use with mute sensor

5-Pin A-Code Double-Ended M12 Female to M12 Male Cordsets (datasheet p/n 236183)				
Model	**Length**	**Dimensions (mm)**	**Pinouts**	
BC-M12F5-M12M5-22-0.3	0.3 m (1 ft)	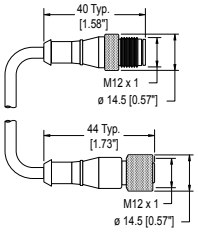	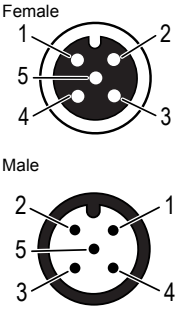	1 = Brown 2 = White 3 = Blue 4 = Black 5 = Gray
BC-M12F5-M12M5-22-1	1 m (3.28 ft)			
BC-M12F5-M12M5-22-2	2 m (6.56 ft)			
BC-M12F5-M12M5-22-5	5 m (16.4 ft)			
BC-M12F5-M12M5-22-8	8 m (26.25 ft)			
BC-M12F5-M12M5-22-10	10 m (30.81 ft)			
BC-M12F5-M12M5-22-15	15 m (49.2 ft)			

© Banner Engineering Corp. All rights reserved.
www.bannerengineering.com

4-Pin A-Code Double-Ended M12 Female to M12 Male Cordsets (datasheet p/n 236186)				
Model	**Length**	**Dimensions (mm)**	**Pinouts**	
BC-M12F4-M12M4-22-1	1 m (3.28 ft)	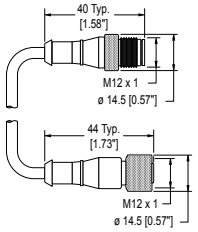	Female 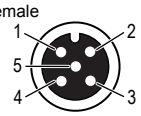 Male 	1 = Brown 2 = White 3 = Blue 4 = Black 5 = Unused c UL us LISTED
BC-M12F4-M12M4-22-2	2 m (6.56 ft)			
BC-M12F4-M12M4-22-3	3 m (9.84 ft)			
BC-M12F4-M12M4-22-4	4 m (13.12 ft)			
BC-M12F4-M12M4-22-5	5 m (16.4 ft)			
BC-M12F4-M12M4-22-10	10 m (30.81 ft)			
BC-M12F4-M12M4-22-15	15 m (49.2 ft)			

4-Pin Double-Ended Threaded M12 Female to M12 Male Cordsets				
Model	**Length**	**Style**	**Dimensions**	**Pinout**
MQDEC-403RS	0.91 m (2.99 ft)	Male Right-angle/ Female Straight	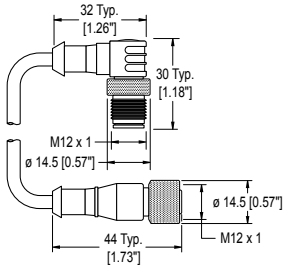	Female 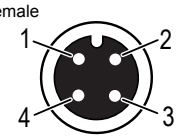 Male 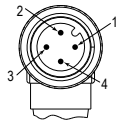 1 = Brown 2 = White 3 = Blue 4 = Black c UL us
MQDEC-406RS	1.83 m (6 ft)			
MQDEC-412RS	3.66 m (12 ft)			
MQDEC-420RS	6.10 m (20 ft)			
MQDEC-430RS	9.14 m (30.2 ft)			
MQDEC-450RS	15.2 m (49.9 ft)			

4-Pin Double-Ended M12 Female Right-Angle to M12 Male Right-Angle Cordsets				
Model	**Length**	**Style**	**Dimensions**	**Pinout**
MQDEC-403RR	0.9 m (2.9 ft)	Male Right-Angle / Female Right-Angle	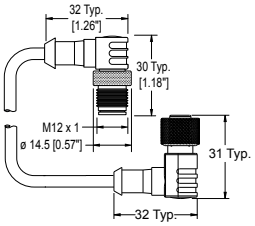	Female 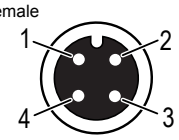 Male  1 = Brown 2 = White 3 = Blue 4 = Black c UL us
MQDEC-406RR	1.8 m (5.9 ft)			
MQDEC-412RR	3.6 m (11.8 ft)			
MQDEC-420RR	6.1 m (20 ft)			

© Banner Engineering Corp. All rights reserved.
www.bannerengineering.com

4-Pin A-Code Single-Ended M12 Female Cordsets (datasheet p/n 235937)				
Model	**Length**	**Dimensions (mm)**	**Pinout (Female)**	
BC-M12F4-22-1	1 m (3.28 ft)	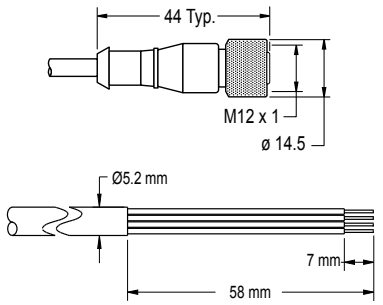	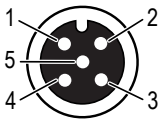	1 = Brown 2 = White 3 = Blue 4 = Black 5 = Unused c UL us LISTED
BC-M12F4-22-2	2 m (6.56 ft)			
BC-M12F4-22-5	5 m (16.4 ft)			
BC-M12F4-22-8	8 m (26.25 ft)			
BC-M12F4-22-10	10 m (30.81 ft)			
BC-M12F4-22-15	15 m (49.2 ft)			
BC-M12F4-22-20	20 m (65.61 ft)			
BC-M12F4-22-25	25 m (82.02 ft)			
BC-M12F4-22-30	30 m (98.42 ft)			

4-Pin A-Code Single-Ended M12 Female Right-Angle Cordsets (datasheet p/n 235937)				
Model	**Length**	**Dimensions (mm)**	**Pinout (Female)**	
BC-M12F4A-22-1	1 m (3.28 ft)	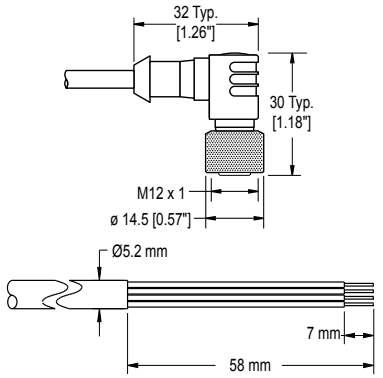	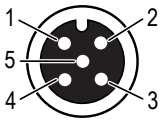	1 = Brown 2 = White 3 = Blue 4 = Black 5 = Unused c UL us LISTED
BC-M12F4A-22-2	2 m (6.56 ft)			
BC-M12F4A-22-5	5 m (16.4 ft)			
BC-M12F4A-22-8	8 m (26.25 ft)			
BC-M12F4A-22-10	10 m (30.81 ft)			
BC-M12F4A-22-15	15 m (49.2 ft)			

Safety Controllers

Safety Controllers provide a fully configurable, software-based safety logic solution for monitoring safety and non-safety devices.

For additional models and XS26 expansion modules, see instruction manual p/n 174868.

Safety controller models

Non-Expandable Models	Expandable Models	Description
SC26-2	**XS26-2**	26 convertible I/O and 2 redundant solid-state safety outputs
SC26-2d	**XS26-2d**	26 convertible I/O and 2 redundant solid-state safety outputs with display
SC26-2e	**XS26-2e**	26 convertible I/O and 2 redundant solid-state safety outputs with Ethernet
SC26-2de	**XS26-2de**	26 convertible I/O and 2 redundant solid-state safety outputs with display and Ethernet
SC10-2roe		10 inputs, 2 redundant relay safety outputs (3 contacts each) (ISD and Ethernet compatible)
	XS26-ISDd	26 inputs, 2 redundant solid-state safety outputs with display, Ethernet, and 8 ISD channels

Banner Engineering Corp Limited Warranty

Banner Engineering Corp. warrants its products to be free from defects in material and workmanship for one year following the date of shipment. Banner Engineering Corp. will repair or replace, free of charge, any product of its manufacture which, at the time it is returned to the factory, is found to have been defective during the warranty period. This warranty does not cover damage or liability for misuse, abuse, or the improper application or installation of the Banner product.

THIS LIMITED WARRANTY IS EXCLUSIVE AND IN LIEU OF ALL OTHER WARRANTIES WHETHER EXPRESS OR IMPLIED (INCLUDING, WITHOUT LIMITATION, ANY WARRANTY OF MERCHANTABILITY OR FITNESS FOR A PARTICULAR PURPOSE), AND WHETHER ARISING UNDER COURSE OF PERFORMANCE, COURSE OF DEALING OR TRADE USAGE.

This Warranty is exclusive and limited to repair or, at the discretion of Banner Engineering Corp., replacement. **IN NO EVENT SHALL BANNER ENGINEERING CORP. BE LIABLE TO BUYER OR ANY OTHER PERSON OR ENTITY FOR ANY EXTRA COSTS, EXPENSES, LOSSES, LOSS OF PROFITS, OR ANY INCIDENTAL, CONSEQUENTIAL OR SPECIAL DAMAGES RESULTING FROM ANY PRODUCT DEFECT OR FROM THE USE OR INABILITY TO USE THE PRODUCT, WHETHER ARISING IN CONTRACT OR WARRANTY, STATUTE, TORT, STRICT LIABILITY, NEGLIGENCE, OR OTHERWISE.**

Banner Engineering Corp. reserves the right to change, modify or improve the design of the product without assuming any obligations or liabilities relating to any product previously manufactured by Banner Engineering Corp. Any misuse, abuse, or improper application or installation of this product or use of the product for personal protection applications when the product is identified as not intended for such purposes will void the product warranty. Any modifications to this product without prior express approval by Banner Engineering Corp will void the product warranties. All specifications published in this document are subject to change; Banner reserves the right to modify product specifications or update documentation at any time.

© Banner Engineering Corp. All rights reserved.
www.bannerengineering.com

Specifications and product information in English supersede that which is provided in any other language. For the most recent version of any documentation, refer to: www.bannerengineering.com.

For patent information, see www.bannerengineering.com/patents.

© Banner Engineering Corp. All rights reserved.