TABLE 1				
P/N	MODEL NUMBER	LENGTH OF TRUNK (m[ft])	LENGTH OF BRANCH 1 (m[ft])	LENGTH OF BRANCH 2 (m[ft])
73252	CSB-M1281M1281	0.3[1.0]	0.3[1.0]	0.3[1.0]
73253	CSB-M1288M1281	2.5[8.0]	0.3[1.0]	0.3[1.0]
73254	CSB-M12815M1281	4.6[15.0]	0.3[1.0]	0.3[1.0]
73255	CSB-M12825M1281	7.6[25.0]	0.3[1.0]	0.3[1.0]
74155	CSB-SEAGATE1-74155	0.23[0.75]	0.49[1.6]	1.10[3.6]
76579	CSB-SEAGATE2-76579	0.9[3.0]	1.8[6.0]	0.3[1.0]
805662	CBS-M1281M128.5	0.3[1.0]	0.15[0.5]	0.15[0.5]

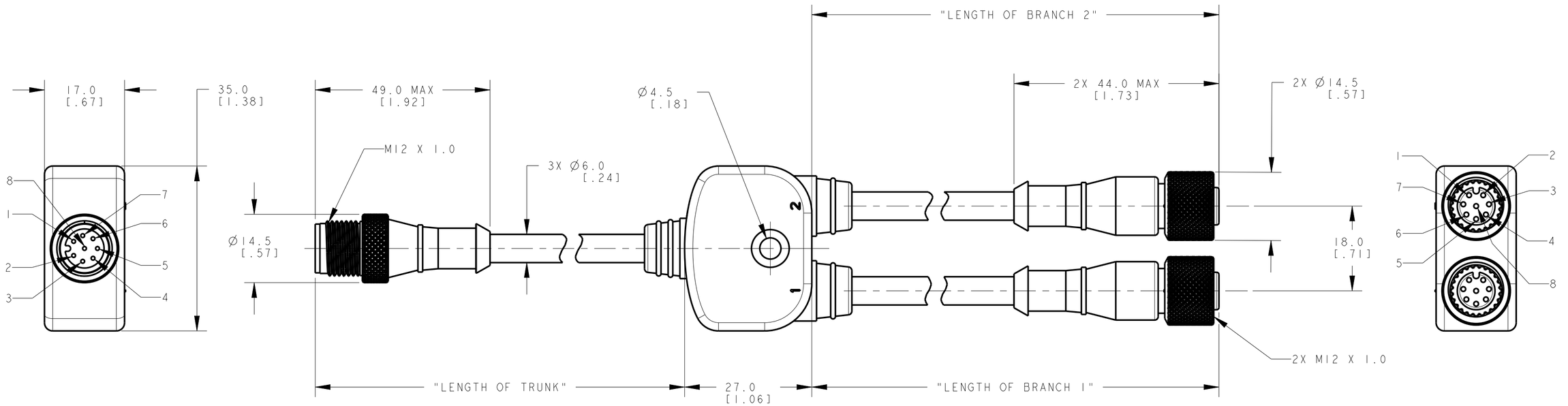

MALE (TRUNK) CONNECTOR

1 = BROWN
2 = ORANGE / BLACK
3 = ORANGE
4 = WHITE
5 = BLACK
6 = BLUE
7 = GREEN / YELLOW
8 = VIOLET

FEMALE (BRANCH) CONNECTOR

1 = BROWN
2 = ORANGE / BLACK
3 = ORANGE
4 = WHITE
5 = BLACK
6 = BLUE
7 = GREEN / YELLOW
8 = VIOLET

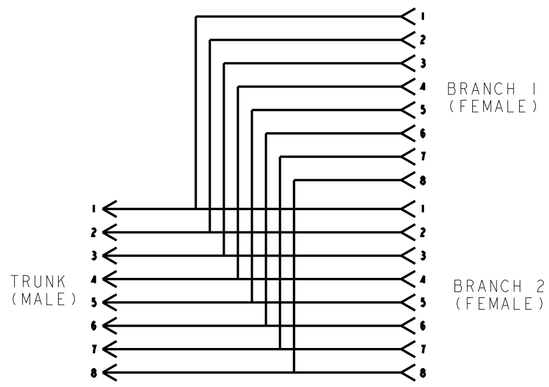

WIRING DIAGRAM

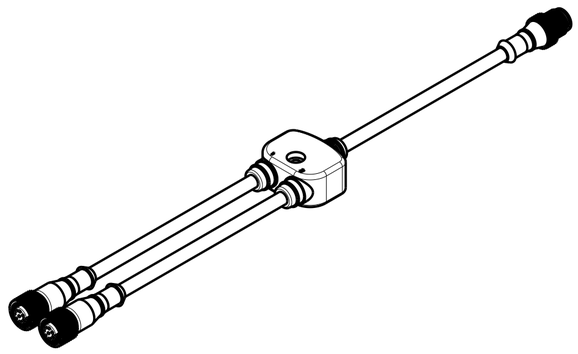

ISOMETRIC VIEW
SCALE 1:2

NOTES:
1. ALL DIMENSIONS ARE MILLIMETERS [INCHES] UNLESS OTHERWISE NOTED.
2. REFER TO "www.bannerengineering.com" FOR ADDITIONAL DATA AND SPECIFICATIONS.

This drawing is the property of BANNER ENGINEERING CORP. Any use or reproduction, in any form, without prior written permission of Banner is prohibited.
© 2015 Banner Engineering Corp.

THIRD ANGLE PROJECTION

BANNER ENGINEERING CORP.
www.bannerengineering.com

TITLE
CSB-M128XM128X

SIZE	DRAWING NO.	REV.
C	215959	A
SCALE 3:2	SHEET 1 OF 1	

CREO

ПРОМЭЛЕКТРОНИКА/ sales@prom-elec.com