# Features

Miniature self-contained DC sensors

- Small, low-cost, self-contained sensors engineered to provide reliable sensing, primarily in straight-forward OEM applications
- Simple installation with no adjustments
- 10 V DC to 30 V DC operation
- Bipolar outputs (one NPN and one PNP); each output rated at 150 milliamps
- Choose models for light operate (LO) or dark operate (DO)
- Totally solid-state and epoxy-encapsulated for unlimited life
- Very compact, yet rugged enough to withstand tough sensing environments

**WARNING:**

- **Do not use this device for personnel protection**
- Using this device for personnel protection could result in serious injury or death.
- This device does not include the self-checking redundant circuitry necessary to allow its use in personnel safety applications. A device failure or malfunction can cause either an energized (on) or de-energized (off) output condition.

In light operate (LO) mode, the output is ON when the target returns the same or more light to the sensor and OFF when the sensor detects less light than the configured/taught target. In **opposed and retroreflective sensing modes**, light operate is active when the beam is unblocked. In **diffuse, fixed field, and adjustable field sensor modes**, light operate is active when the target is present.

In dark operate (DO) mode, the output is ON when the target returns less light to the sensor than the configured target and OFF when the sensor detects more light than the configured/taught target. In **opposed and retroreflective sensing modes**, dark operate is active when the beam is blocked. In **diffuse, fixed field, and adjustable field sensor modes**, dark operate is active when the target is absent.

Additional model information:

- 9 m (30 ft) cables are available by adding suffix "**W/30**" to the model number of any cabled sensor (for example, SE61RNC W/30).
- High-speed models may be ordered by adding suffix "**MHS**" to the model number of any standard ECONO-BEAM dc sensor (for example, SE61EMHS). Response time for these sensors decreases to 1 millisecond; faster response comes at the expense of lower excess gain.

# ECONO-BEAM Opposed Mode Emitter (E) and Receiver (R)

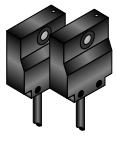

Due to their small size, right-angle design, and unique shape, this sensor pair is ideal for mounting against the side rails of conveyors for use in flow control and product sensing, and are an excellent choice for use on supermarket checkout stands. They may be bolted face-to-face to form a powerful slot sensor for edgeguiding of opaque materials or for sensing gear teeth, timing rings, or "flags," with enough excess gain to operate even in the dirtiest sensing environments.
One emitter and one receiver are required for use.

| Models | Range | Sensing Beam | Cable | Output Type |
|---|---|---|---|---|
| SE61E | 1.8 m (6 ft) | Infrared, 880 nm | 2 m (6.5 ft) | n/a |
| SE61R | | | | Bipolar NPN/PNP, LO |
| SE61RNC | | | | Bipolar NPN/PNP, DO |

*Emitter/Receiver Opposed Mode—Excess Gain*

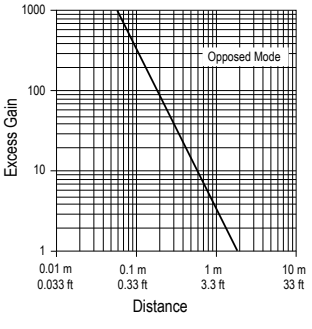


*Emitter/Receiver Opposed Mode—Beam Pattern*

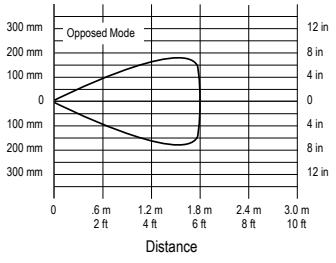


Effective Beam: 3 mm

Original Instructions
12-Jun-26

© Banner Engineering Corp. All rights reserved.
www.bannerengineering.com

03410
p/n: 03410 Rev J

ПРОМЭЛЕКТРОНИКА/ sales@prom-elec.com

# ECONO-BEAM Non-Polarized Retroreflective Mode



The 1/2-inch diameter effective beam of retroreflective model SE612LV, measured at 1 foot from the lens, makes it a good choice for sensing relatively small objects when opposed sensing is not possible. The visible beam simplifies alignment to the retroreflective target. Use the largest retroreflective target possible. If sensing materials with shiny surfaces, scan at an angle of at least 10° to the shiny surface to minimize false light return (“proxing” effect).

| Models | Range[1] | Sensing Beam | Cable | Output Type |
|---|---|---|---|---|
| SE612LV | 4.5 m (15 ft) | Visible red, 650 nm | 2 m (6.5 ft) | Bipolar NPN/PNP, LO |
| SE612LVNC | | | | Bipolar NPN/PNP, DO |

*Non-Polarized Retroreflective Mode—Excess Gain*

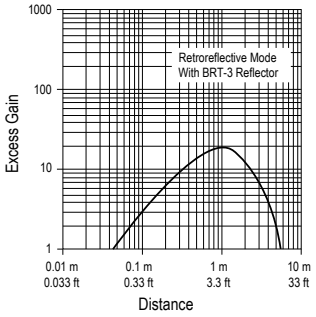


*Non-Polarized Retroreflective Mode—Beam Pattern*

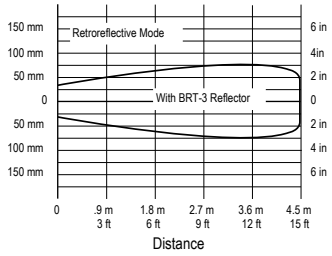


The following models are no longer available for order but are still covered by the information in this document.

- SE612LV W/30
- SE612LVMHS and SE612LVMHS W/30
- SE612LVNC W/30
- SE612LVNCMHS and SE612LVNCMHS W/30

# ECONO-BEAM Diffuse Mode



Ideal for applications where the target’s reflectivity and profile are sufficient to return a large percentage of the emitted light back to the sensor. Divergent diffuse model SE612W is particularly useful for sensing transparent or translucent objects (clear plastic or glass) and for dependable sensing of irregular surface features; its excess gain falls off sharply beyond 1 inch. As a result, it may be used when it is necessary to ignore background objects. Performance is based on a 90% reflectance white test card.

| Models | Range | Sensing Beam | Cable | Output Type |
|---|---|---|---|---|
| SE612D | 200 mm (8 in) | Infrared, 880 nm | 2 m (6.5 ft) | Bipolar NPN/PNP, LO |
| **Divergent Diffuse** | | | | |
| SE612W | 76 mm (3 in) | Infrared, 880 nm | 2 m (6.5 ft) | Bipolar NPN/PNP, LO |

[1] Specified using model BRT-3 retroreflector (3-in diameter). Actual range may vary depending on retroreflector size and efficiency.


© Banner Engineering Corp. All rights reserved.
www.bannerengineering.com

*Diffuse Mode—Excess Gain*

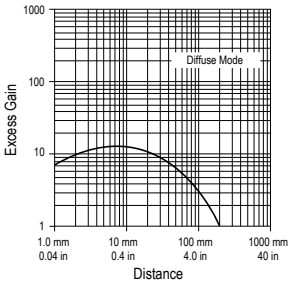


*Diffuse Mode—Beam Pattern*

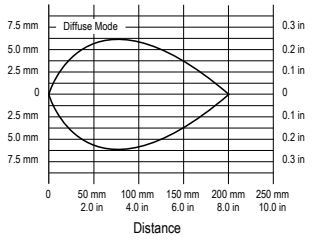


*Divergent Diffuse Mode—Excess Gain*

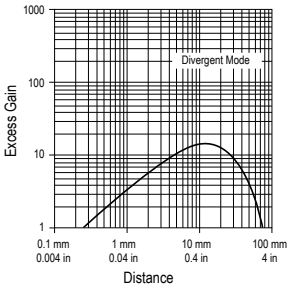


*Divergent Diffuse Mode—Beam Pattern*

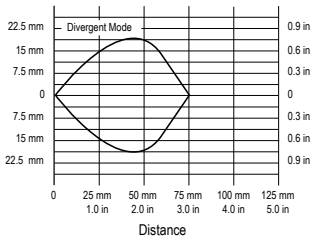


The following models are no longer available for order but are still covered by the information in this document.

| Models | Range | Sensing Beam | Output Type |
|---|---|---|---|
| SE612D W/30 | 200 mm (8 in) | Infrared, 880 nm | Bipolar NPN/PNP, LO |
| SE612DMHS and SE612DMHS W/30 | | | |
| SE612DNC (all models) | | | Bipolar NPN/PNP, DO |
| **Divergent Diffuse** | | | |
| SE612WMHS and SE612WMHS W/30 | 76 mm (3 in) | Infrared, 880 nm | Bipolar NPN/PNP, LO |
| SE612WNC (all models) | | | Bipolar NPN/PNP, DO |

# ECONO-BEAM Convergent Mode



Mechanical convergent-beam sensor's light source and receiver opto-elements are positioned in the housing so that sensing takes place where the optical patterns cross. The sensing beam is intense at the 0.5-inch convergent point, excellent for sensing materials of low reflectivity and very small targets such as wire or thread; also effective for reflective sensing in areas where background suppression is a requirement. Visible red models are useful in some high-contrast color registration applications.
Performance is based on a 90% reflectance white test card.

| Models | Focus | Sensing Beam | Cable | Output Type |
|---|---|---|---|---|
| **Mechanical Convergent Mode** | | | | |
| SE612C | 12 mm (0.5 in) | Infrared, 940 nm | 2 m (6.5 ft) | Bipolar NPN/PNP, LO |
| SE612CNC | | | | Bipolar NPN/PNP, DO |
| **Convergent Mode** | | | | |
| SE612CV | 16 mm (0.65 in)<br>**Spot Size at Focus:** 1.2 mm (0.05 in) | Visible red, 650 nm | 2 m (6.5 ft) | Bipolar NPN/PNP, LO |
| SE612CVNC | | | | Bipolar NPN/PNP, DO |


© Banner Engineering Corp. All rights reserved.
www.bannerengineering.com

*Mechanical Convergent Mode—Excess Gain*

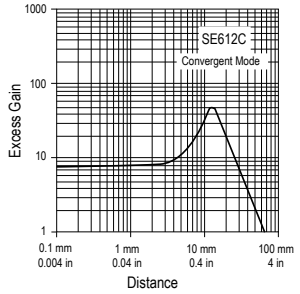


*Mechanical Convergent Mode—Beam Pattern*

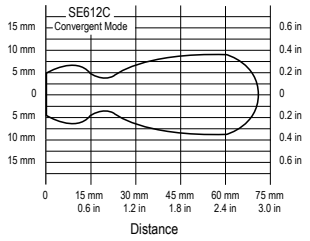


*Convergent Mode—Excess Gain*

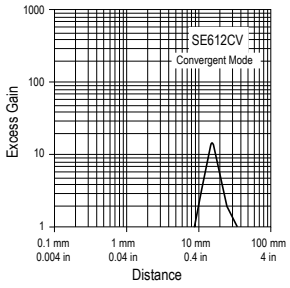


*Convergent Mode—Beam Pattern*

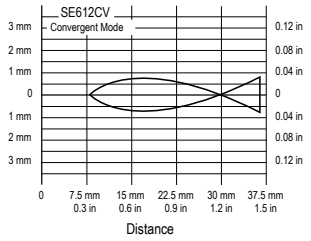


The following models are no longer available for order but are still covered by the information in this document.

| Models | Focus | Sensing Beam | Output Type |
|---|---|---|---|
| **Mechanical Convergent Mode** | | | |
| SE612CMHS and SE612CMHS W/30 | 12 mm (0.5 in) | Infrared, 940 nm | Bipolar NPN/PNP, LO |
| SE612CNC W/30, SE612CNCMHS, and SE612CNCMHS W/30 | | | Bipolar NPN/PNP, DO |
| **Convergent Mode** | | | |
| SE612CV W/30, SE612CVMHS, SE612CVMHS W/30 | 16 mm (0.65 in)<br>**Spot Size at Focus:** 1.2 mm (0.05 in) | Visible red, 650 nm | Bipolar NPN/PNP, LO |
| SE612CVNC W/30, SE612CVNCMHS, and SE612CVNCMHS W/30 | | | Bipolar NPN/PNP, DO |

# ECONO-BEAM Glass Fiber Optic



Ideal for situations where hostile environments or space restrictions prohibit placing the sensor itself in the sensing position. The response time required by model SE612F is 10 milliseconds (0.01 seconds). If fast-moving objects are to be detected, select a fiber optic assembly that senses the object for a long period of time. (For example, a bifurcated fiber optic with a rectangular bundle termination like model BR2.53S may be positioned so that the object is detected while it passes along the entire length of the rectangular sensing area.) Not recommended for applications requiring bending or repeated flexing of fibers.
Diffuse mode performance based on 90% reflectance white test card.

The following models are no longer available for order but are still covered by the information in this document.

| Models | Range | Sensing Beam | Cable | Output Type |
|---|---|---|---|---|
| SE612F (all models) | Range varies by sensing mode and fiber optics used | Infrared, 880 nm | 2 m (6.5 ft) | Bipolar NPN/PNP, LO |
| SE612FNC (all models) | | | | Bipolar NPN/PNP, DO |

*SE612F Opposed Mode—Excess Gain*

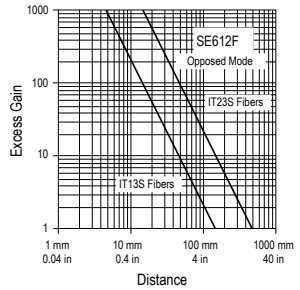


*SE612F Opposed Mode—Beam Pattern*

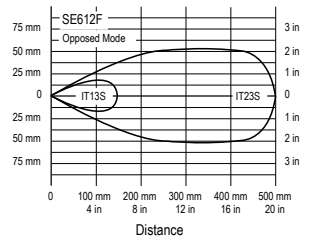


*SE612FNC Diffuse Mode—Excess Gain*

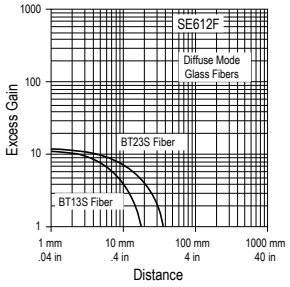


*SE612FNC Diffuse Mode—Beam Pattern*

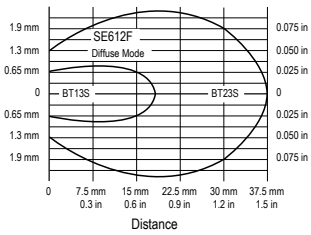



© Banner Engineering Corp. All rights reserved.
www.bannerengineering.com

# ECONO-BEAM Plastic Fiber Optic



An excellent option where sensing must be accomplished in tight, inaccessible or volatile areas. Fibers withstand vibration and shock and are immune to electrical noise. Plastic fibers function well at temperatures between –30 °C to +70 °C (–22 °F to +158 °F), and stand up to repeated flexing. Most are easy to shorten in the field, to develop custom installations. Not recommended for severe environments.
Diffuse mode performance based on 90% reflectance white test card.

The following models are no longer available for order but are still covered by the information in this document.

| Models | Range | Sensing Beam | Cable | Output Type |
|---|---|---|---|---|
| SE612FP (all models) | Range varies by sensing mode and fiber optics used | Visible red, 650 nm | 2 m (6.5 ft) | Bipolar NPN/PNP, LO |
| SE612FPNC (all models) | | | | Bipolar NPN/PNP, DO |

*Opposed Mode, Plastic Fibers—Excess Gain*

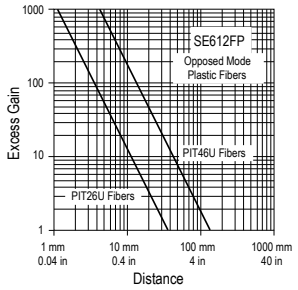


*Opposed Mode, Plastic Fibers—Beam Pattern*

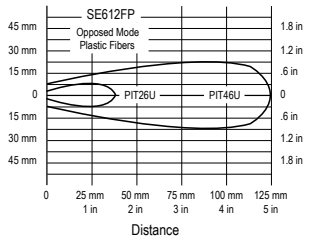


*Diffuse Mode, Plastic Fibers—Execss Gain*

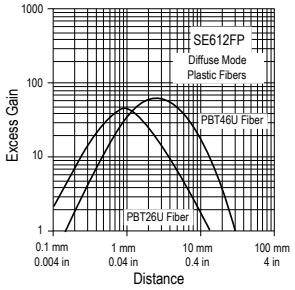


*Diffuse Mode, Plastic Fibers—Beam Pattern*

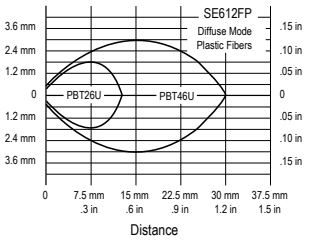


# Wiring Diagrams

*All Sensors Except Emitters*

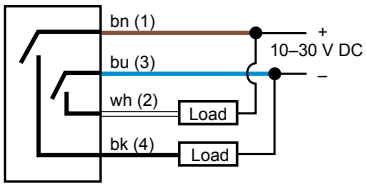


*SE61E Emitters*

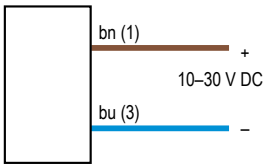


Key
1 = Brown
2 = White
3 = Blue
4 = Black

# Specifications

**Supply Voltage and Current**
10 to 30 V DC (10% maximum ripple) at less than 20 mA (exclusive of load)

**Supply Protection Circuitry**
Protected against reverse polarity and transient voltages

**Output Configuration**
Bipolar: One current sourcing (PNP) and one current sinking (NPN) open-collector transistor

**Output Rating**
150 mA maximum each output

**Off-state leakage current:** less than 1 microamp

**Output saturation voltage (PNP output):** less than 1 V at 10 mA and less than 2 volts at 150 mA

**Output saturation voltage (NPN output):** less than 200 mV at 10 mA and less than 1 volt at 150 mA

**Output Protection Circuitry**
Protected against false pulse on power-up

**Output Response Time**
Less than 10 milliseconds ON and OFF; independent of signal strength

**NOTE:** 100 millisecond delay on power-up: outputs do not conduct during this time.

**MHS Models:** 1 millisecond (Faster response comes at the expense of lower excess gain.)

**Repeatability**
0.4 ms; MHS models 0.06 ms; independent of signal strength.

**Indicators**
All models except emitter-only units have a top-mounted LED indicator that lights whenever the receiver “sees” its modulated light source.


© Banner Engineering Corp. All rights reserved.
www.bannerengineering.com

### Construction

Reinforced thermoplastic polyester (models LV, CV, F and FP) or polycarbonate (other models) housing, totally encapsulated for protection against moisture, vibration and corrosion.

### Connections

PVC-jacketed 4-wire 2 m (6.5 ft) or 9 m (30 ft) cables

### Environmental Rating

IEC IP66

### Operating Conditions

**Temperature:** 0 °C to +50 °C (+32 °F to +122 °F)

90% at +50 °C maximum relative humidity (non-condensing)

### Certifications

Banner Engineering BV
Park Lane, Culliganlaan 2F bus 3
1831 Diegem, BELGIUM

Turck Banner LTD Blenheim House
Blenheim Court
Wickford, Essex SS11 8YT
GREAT BRITAIN

### Required Overcurrent Protection

**WARNING:** Electrical connections must be made by qualified personnel in accordance with local and national electrical codes and regulations.

Overcurrent protection is required to be provided by end product application per the supplied table.

Overcurrent protection may be provided with external fusing or via Current Limiting, Class 2 Power Supply.

Supply wiring leads < 24 AWG shall not be spliced.

For additional product support, go to www.bannerengineering.com.

| Supply Wiring (AWG) | Required Overcurrent Protection (A) | Supply Wiring (AWG) | Required Overcurrent Protection (A) |
|---|---|---|---|
| 20 | 5.0 | 26 | 1.0 |
| 22 | 3.0 | 28 | 0.8 |
| 24 | 2.0 | 30 | 0.5 |

## Dimensions

All measurements are listed in millimeters [inches], unless noted otherwise. The measurements provided are subject to change.

*Opposed Mode (model suffix E & R)*

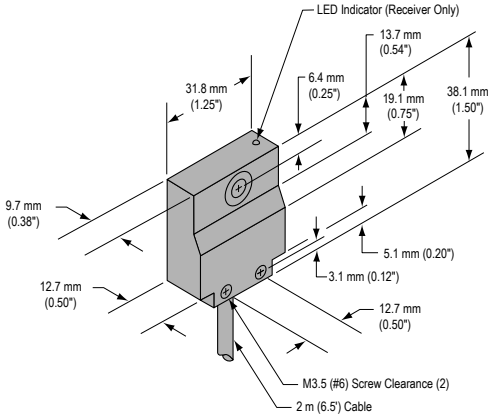


*Diffuse & Divergent Mode (model suffix D & W)*

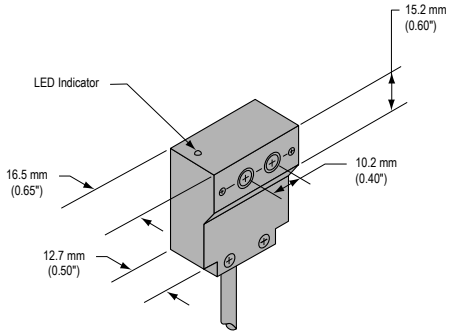


*Retroreflective & Convergent Mode (model suffix LV & CV)*

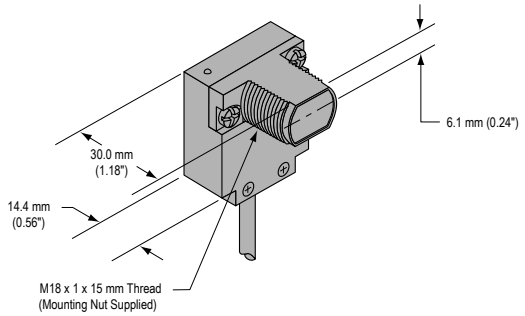


*Glass Fiber Optic (model suffix F)*

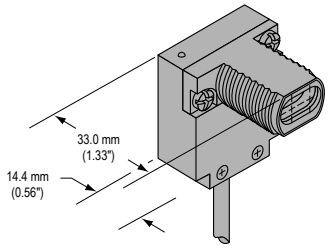


Continued on page 7


© Banner Engineering Corp. All rights reserved.
www.bannerengineering.com

Continued from page 6

*Mechanical Convergent Mode (model suffix C)*

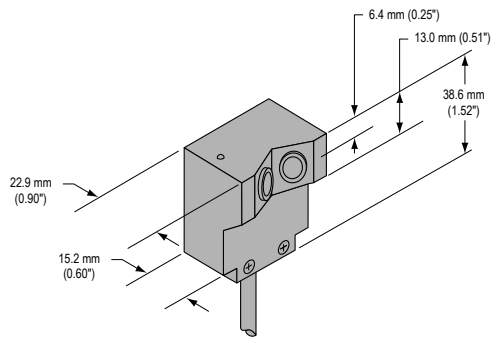


*Plastic Fiber Optic (model suffix FP)*

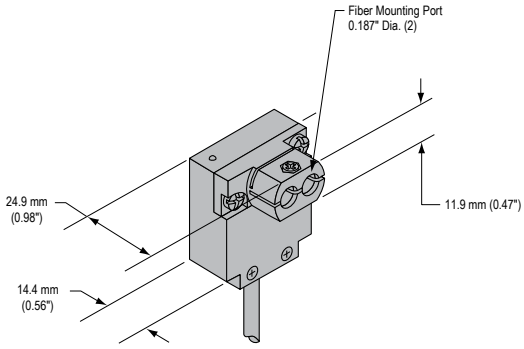


# Retroreflective Targets



The range of all retroreflective sensors is specified using target model BRT-3. Sensing range and signal strength at any given sensor-to-target distance will vary due to target reflectivity and target area. A “Reflectivity Factor” is included for each target model to help predict sensor performance, relative to the excess gain curve plotted for target model BRT-3. Consider, also, target area when predicting performance.

* Optional brackets are available; see http://www.bannerengineering.com.

*Round retroreflectors*

| Model | Reflectivity Factor | Maximum Temperature | Size |
|---|---|---|---|
| **BRT-6** | 1.0 | +60 °C (+140 °F) | 20.3 mm diameter |
| **BRT-1** | 1.0 | +60 °C (+140 °F) | 25 mm diameter |
| **BRT-1.5** | 1.0 | +60 °C (+140 °F) | 46 mm diameter |
| **BRT-2B** | 1.0 | +65 °C (+150 °F) | 60.5 mm diameter |
| **BRT-3** * | 1.0 | +60 °C (+140 °F) | 84 mm diameter |
| **BRT-25R** | 1.0 | +60 °C (+140 °F) | 25.2 mm diameter |
| **BRT-41AHT** | 1.0 | +200 °C (+390 °F) | 74 mm diameter |
| **BRT-42A** | 1.0 | +60 °C (+140 °F) | 42 mm diameter |
| **BRT-42D** | 1.0 | +60 °C (+140 °F) | 42 mm diameter |
| **BRT-50** | 1.0 | +60 °C (+140 °F) | 50.8 mm diameter |
| **BRT-50D** * | 1.0 | +60 °C (+140 °F) | 50.8 mm diameter |
| **BRT-50R** * | 1.0 | +60 °C (+140 °F) | 50.8 mm diameter |

* Optional brackets are available; see http://www.bannerengineering.com.

*Square retroreflectors*

| Model | Reflectivity Factor | Maximum Temperature | Size |
|---|---|---|---|
| **BRT-2X2** | 1.0 | +50 °C (+120 °F) | 61 mm × 51 mm |
| **BRT-77X77C** * | 2.0 | +60 °C (+140 °F) | 84.5 mm × 84.5 mm |
| **BRT-92X92C** * | 3.0 | +60 °C (+140 °F) | 100 mm × 100 mm |
| **BRT-4HT** * (This target has micro-prism geometry.) | 0.15 | +480 °C (+900 °F) | 100 mm × 100 mm |

* Optional brackets are available; see http://www.bannerengineering.com.


© Banner Engineering Corp. All rights reserved.
www.bannerengineering.com

*Miscellaneous retroreflectors*

| Model | Reflectivity Factor | Maximum Temperature | Size |
|---|---|---|---|
| **BRT-35X20A** | 1.4 | +60 °C (+140 °F) | 23.5 mm × 55 mm |
| **BRT-40X18A** | 1.0 | +60 °C (+140 °F) | 18 mm × 60 mm |
| **BRT-40X23** | 1.4 | +60 °C (+140 °F) | 23.5 mm × 40 mm |
| **BRT-40X23B** | 1.4 | +60 °C (+140 °F) | 23.5 mm × 47.5 mm |
| **BRT-48X32** | 1.0 | +60 °C (+140 °F) | 32.5 mm × 48 mm |
| **BRT-48X32A** | 1.0 | +60 °C (+140 °F) | 32 mm × 65 mm |
| **BRT-48X32B** | 1.0 | +60 °C (+140 °F) | 32.5 mm × 57 mm |
| **BRT-53X19A** | 1.4 | +60 °C (+140 °F) | 19 mm × 72 mm |
| **BRT-60X40C** * | 1.4 | +60 °C (+140 °F) | 40.5 mm × 60 mm |
| **BRT-100X18A** | 1.4 | +60 °C (+140 °F) | 18.5 mm × 120 mm |
| **BRT-100X50** | 1.5 | +60 °C (+140 °F) | 101 mm × 50.6 mm |
| **BRT-100X55A** | 1.5 | +60 °C (+140 °F) | 132 mm × 56 mm |
| **BRT-L** | 0.8 | +65 °C (+150 °F) | 165 mm × 19 mm |

# Banner Engineering Corp Limited Warranty

Banner Engineering Corp. warrants its products to be free from defects in material and workmanship for one year following the date of shipment. Banner Engineering Corp. will repair or replace, free of charge, any product of its manufacture which, at the time it is returned to the factory, is found to have been defective during the warranty period. This warranty does not cover damage or liability for misuse, abuse, or the improper application or installation of the Banner product.

**THIS LIMITED WARRANTY IS EXCLUSIVE AND IN LIEU OF ALL OTHER WARRANTIES WHETHER EXPRESS OR IMPLIED (INCLUDING, WITHOUT LIMITATION, ANY WARRANTY OF MERCHANTABILITY OR FITNESS FOR A PARTICULAR PURPOSE), AND WHETHER ARISING UNDER COURSE OF PERFORMANCE, COURSE OF DEALING OR TRADE USAGE.**

This Warranty is exclusive and limited to repair or, at the discretion of Banner Engineering Corp., replacement. **IN NO EVENT SHALL BANNER ENGINEERING CORP. BE LIABLE TO BUYER OR ANY OTHER PERSON OR ENTITY FOR ANY EXTRA COSTS, EXPENSES, LOSSES, LOSS OF PROFITS, OR ANY INCIDENTAL, CONSEQUENTIAL OR SPECIAL DAMAGES RESULTING FROM ANY PRODUCT DEFECT OR FROM THE USE OR INABILITY TO USE THE PRODUCT, WHETHER ARISING IN CONTRACT OR WARRANTY, STATUTE, TORT, STRICT LIABILITY, NEGLIGENCE, OR OTHERWISE.**

Banner Engineering Corp. reserves the right to change, modify or improve the design of the product without assuming any obligations or liabilities relating to any product previously manufactured by Banner Engineering Corp. Any misuse, abuse, or improper application or installation of this product or use of the product for personal protection applications when the product is identified as not intended for such purposes will void the product warranty. Any modifications to this product without prior express approval by Banner Engineering Corp will void the product warranties. All specifications published in this document are subject to change; Banner reserves the right to modify product specifications or update documentation at any time. Specifications and product information in English supersede that which is provided in any other language. For the most recent version of any documentation, refer to: www.bannerengineering.com.

For patent information, see www.bannerengineering.com/patents.


© Banner Engineering Corp. All rights reserved.
www.bannerengineering.com