Models

This guide is designed to help you set up and install the TM18 Series Sensor. For complete information on programming, performance, troubleshooting, dimensions, and accessories, please refer to the Product Manual at www.bannerengineering.com. Search for part number 155853 to view the Product Manual. Use of this document assumes familiarity with pertinent industry standards and practices.

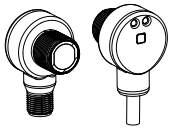

WARNING:

- **Do not use this device for personnel protection**
- Using this device for personnel protection could result in serious injury or death.
- This device does not include the self-checking redundant circuitry necessary to allow its use in personnel safety applications. A device failure or malfunction can cause either an energized (on) or de-energized (off) output condition.

Opposed Mode: 20 m Range		Polarized: 5.5 m* Range		Diffuse: 500 mm Range	
Model	**Output**	**Model**	**Output**	**Model**	**Output**
TM186E	None	TM18AP6LP	PNP, LO 3-wire	TM18AP6DV	PNP, LO 3-wire
TM18AP6R	PNP, LO 3-wire	TM18RP6LP	PNP, DO 3-wire	TM18RP6DV	PNP, DO 3-wire
TM18RP6R	PNP, DO 3-wire	TM18VP6LP	PNP, LO/DO 4-wire	TM18VP6DV	PNP, LO/DO 4-wire
TM18VP6R	PNP, LO/DO 4-wire	TM18AN6LP	NPN, LO 3-wire	TM18AN6DV	NPN, LO 3-wire
TM18AN6R	NPN, LO 3-wire	TM18RN6LP	NPN, DO 3-wire	TM18RN6DV	NPN, DO 3-wire
TM18RN6R	NPN, DO 3-wire	TM18VN6LP	NPN, LO/DO 4-wire	TM18VN6DV	NPN, LO/DO 4-wire
TM18VN6R	NPN, LO/DO 4-wire	* Range specified with BRT-84 reflector		QD Models are also available	

Fixed Field: 25 mm Range		Fixed Field: 50 mm Range		Fixed Field: 100 mm Range	
Model	**Output**	**Model**	**Output**	**Model**	**Output**
TM18AP6FF25	PNP, LO 3-wire	TM18AP6FF50	PNP, LO 3-wire	TM18AP6FF100	PNP, LO 3-wire
TM18VP6FF25	PNP, LO/DO 4-wire	TM18VP6FF50	PNP, LO/DO 4-wire	TM18VP6FF100	PNP, LO/DO 4-wire
TM18AN6FF25	NPN, LO 3-wire	TM18AN6FF50	NPN, LO 3-wire	TM18AN6FF100	NPN, LO 3-wire
TM18VN6FF25	NPN, LO/DO 4-wire	TM18VN6FF50	NPN, LO/DO 4-wire	TM18VN6FF100	NPN, LO/DO 4-wire

Fixed Field: 25 mm Range		Fixed Field: 50 mm Range		Fixed Field: 100 mm Range	
Model	**Output**	**Model**	**Output**	**Model**	**Output**
TM18AP6FF25IR	PNP, LO 3-wire	TM18AP6FF50IR	PNP, LO 3-wire	TM18AP6FF100IR	PNP, LO 3-wire
TM18VP6FF25IR	PNP, LO/DO 4-wire	TM18VP6FF50IR	PNP, LO/DO 4-wire	TM18VP6FF100IR	PNP, LO/DO 4-wire
TM18AN6FF25IR	NPN, LO 3-wire	TM18AN6FF50IR	NPN, LO 3-wire	TM18AN6FF100IR	NPN, LO 3-wire
TM18VN6FF25IR	NPN, LO/DO 4-wire	TM18VN6FF50IR	NPN, LO/DO 4-wire	TM18VN6FF100IR	NPN, LO/DO 4-wire

Wiring

Cabled emitters

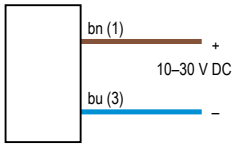

NPN LO 3-Wire

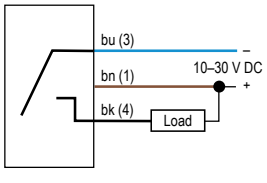

PNP LO 3-Wire

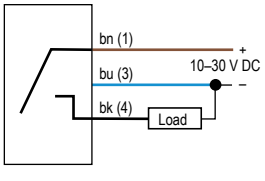

Continued on page 2

Original Instructions
31-Jul-26

© Banner Engineering Corp. All rights reserved.
www.bannerengineering.com

151948
p/n: 151948 Rev G

ПРОМЭЛЕКТРОНИКА/ sales@prom-elec.com

Continued from page 1

Wiring Key

1 = Brown
2 = White
3 = Blue
4 = Black

QD and cabled emitter wiring functionality is identical; black and white wires have no connection when not shown.

NPN DO 3-Wire

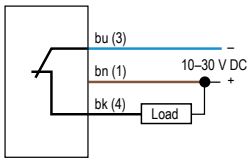

PNP DO 3-Wire

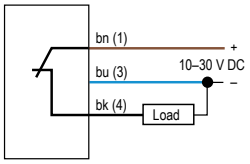

4-pin M12 male pinout

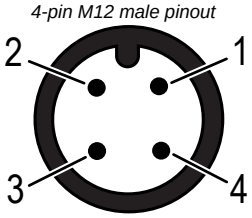

NPN LO/DO 4-Wire

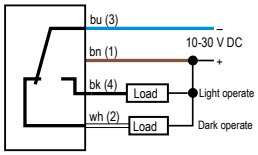

PNP LO/DO 4-Wire

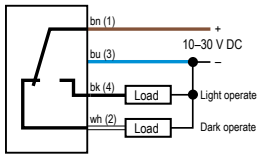

In light operate (LO) mode, the output is ON when the target returns the same or more light to the sensor and OFF when the sensor detects less light than the configured/taught target. In **opposed and retroreflective sensing modes**, light operate is active when the beam is unblocked. In **diffuse, fixed field, and adjustable field sensor modes**, light operate is active when the target is present.

In dark operate (DO) mode, the output is ON when the target returns less light to the sensor than the configured target and OFF when the sensor detects more light than the configured/taught target. In **opposed and retroreflective sensing modes**, dark operate is active when the beam is blocked. In **diffuse, fixed field, and adjustable field sensor modes**, dark operate is active when the target is absent.

Specifications

Supply Voltage and Current - Class 2

10 V DC to 30 V DC (10% max. ripple within specified limits); supply current (exclusive of load current):

Emitters: 25 mA

Receivers: 20 mA

Polarized Retroreflective: 20 mA

Diffuse and Fixed-Field: 35 mA

Supply Protection Circuitry

Protected against reverse polarity and transient voltages

Output Configuration

NPN or PNP, depending on model

Light Operate: Output conducts when sensor receives its own (or the emitter's) modulated light

Dark Operate: Output conducts when sensor does not receive it own (or the emitter fts) modulated light

Effective Beam

13 mm for opposed mode sensors

Adjustments

Diffuse models only: single turn rear panel sensitivity control

LED

Opposed (emitter) mode models: Visible red 625 nm

Polarized retroreflective (LP) mode models: Visible red 624 nm

Fixed-field background suppression (FFxxx) mode models: Visible red 660 nm

Fixed-field background suppression (FFxxxIR) mode models: Infrared, 880 nm

Diffuse (DV) mode models: Visible red 660 nm

Connections

2 m (6.5 ft) integral PVC-jacketed cable or 9 m (30 ft) integral PVC cable

Integral 4-pin M12 male quick-disconnect connector

150 mm (6 in) PVC-jacketed cable with a 4-pin M12 male quick-disconnect connector

Construction

Housing: Zinc die cast with nickel plating

Lens: PMMA or PC (opposed mode only)

Black Cover: PBT polyester housing

Output Protection Circuitry

Protected against output short-circuit, continuous overload, and false pulse on power-up

Output Rating

150 mA maximum each output at 25 °C, derated to 100 mA at 70 °C (derate about 1 mA per °C)

OFF-state leakage current: < 1 microamp at 30 V DC

ON-state saturation voltage: < 1 V at 10 mA DC; < 1.5 V at 150 mA DC

Output Response Time (TM18)

Opposed mode: 1.5 ms ON, 0.75 ms OFF

Retro: 3 ms ON and OFF

Diffuse and Fixed Field: 3 ms ON, 1.5 ms OFF

Note: 100 ms delay on power-up; outputs do not conduct during this time.

Repeatability (TM18)

Opposed mode: 190 µs

Retro: 585 µs

Diffuse and Fixed Field: 185 µs

Operating Conditions

–40 °C to +70 °C (–40 °F to +158 °F)

90% at +50 °C maximum relative humidity (non-condensing)

© Banner Engineering Corp. All rights reserved.
www.bannerengineering.com

Vibration and Mechanical Shock

All models meet Mil. Std. 202F requirements. Method 201A (Vibration; frequency 10 to 60 Hz, max., double amplitude 0.06 in acceleration 10G). Method 213B conditions H&I (Shock: 75G with unit operating; 100G for non-operation)

Environmental Rating

IP67; quick disconnect models are IP69K per ISO 20653 when mated with a wash-down rated (IP69K per ISO 20653) cordset

Required Overcurrent Protection

WARNING: Electrical connections must be made by qualified personnel in accordance with local and national electrical codes and regulations.

Overcurrent protection is required to be provided by end product application per the supplied table.

Overcurrent protection may be provided with external fusing or via Current Limiting, Class 2 Power Supply.

Supply wiring leads < 24 AWG shall not be spliced.

For additional product support, go to www.bannerengineering.com.

Supply Wiring (AWG)	Required Overcurrent Protection (A)	Supply Wiring (AWG)	Required Overcurrent Protection (A)
20	5.0	26	1.0
22	3.0	28	0.8
24	2.0	30	0.5

Certifications

c UL us LISTED

Class 2 supply Required

CE

Indicators

Two LEDs (green and amber)

Complementary (4-Wire) Models	
Indicator	**Description**
Green ON	Power ON
Green Flashing*	Output is overloaded
Amber ON	N.O. Output is conducting
Amber Flashing*	Marginal excess gain (1 to 1.5x)

* Not valid for Diffuse or Fixed Field Models.

Single Output (3-Wire) Models	
Indicator	**Description**
Green ON	Power ON
Green Flashing	N.A.
Amber ON	Output is conducting
Amber Flashing	N.A.

© Banner Engineering Corp. All rights reserved.
www.bannerengineering.com

Dimensions

TM18 LP Cable

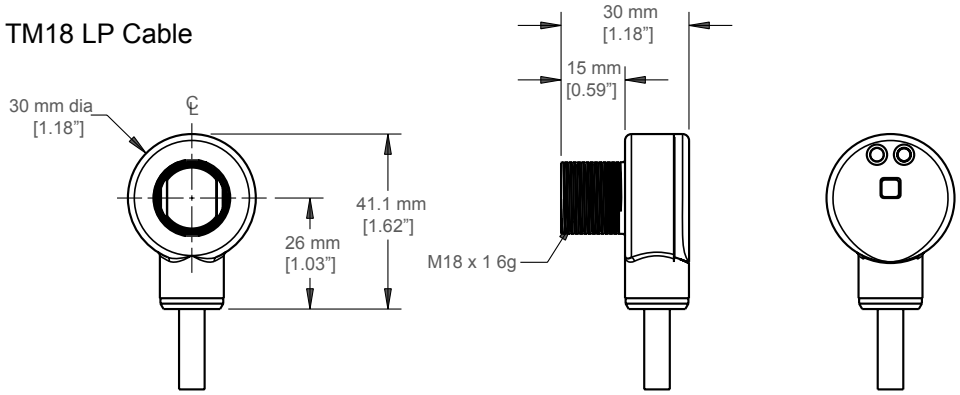

TM18 LP QD

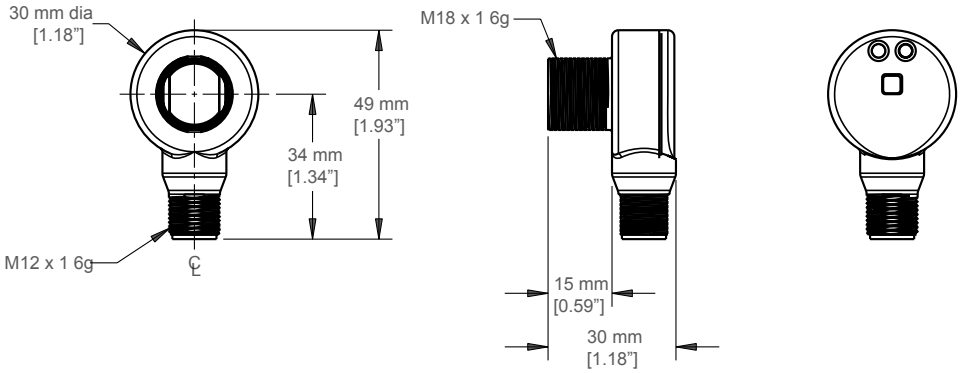

Maximum Torque specification: 5.6 nm or 50 in-lbs. Lockwasher and M18 nut included.

Banner Engineering Corp Limited Warranty

Banner Engineering Corp. warrants its products to be free from defects in material and workmanship for one year following the date of shipment. Banner Engineering Corp. will repair or replace, free of charge, any product of its manufacture which, at the time it is returned to the factory, is found to have been defective during the warranty period. This warranty does not cover damage or liability for misuse, abuse, or the improper application or installation of the Banner product.

THIS LIMITED WARRANTY IS EXCLUSIVE AND IN LIEU OF ALL OTHER WARRANTIES WHETHER EXPRESS OR IMPLIED (INCLUDING, WITHOUT LIMITATION, ANY WARRANTY OF MERCHANTABILITY OR FITNESS FOR A PARTICULAR PURPOSE), AND WHETHER ARISING UNDER COURSE OF PERFORMANCE, COURSE OF DEALING OR TRADE USAGE.

This Warranty is exclusive and limited to repair or, at the discretion of Banner Engineering Corp., replacement. **IN NO EVENT SHALL BANNER ENGINEERING CORP. BE LIABLE TO BUYER OR ANY OTHER PERSON OR ENTITY FOR ANY EXTRA COSTS, EXPENSES, LOSSES, LOSS OF PROFITS, OR ANY INCIDENTAL, CONSEQUENTIAL OR SPECIAL DAMAGES RESULTING FROM ANY PRODUCT DEFECT OR FROM THE USE OR INABILITY TO USE THE PRODUCT, WHETHER ARISING IN CONTRACT OR WARRANTY, STATUTE, TORT, STRICT LIABILITY, NEGLIGENCE, OR OTHERWISE.**

Banner Engineering Corp. reserves the right to change, modify or improve the design of the product without assuming any obligations or liabilities relating to any product previously manufactured by Banner Engineering Corp. Any misuse, abuse, or improper application or installation of this product or use of the product for personal protection applications when the product is identified as not intended for such purposes will void the product warranty. Any modifications to this product without prior express approval by Banner Engineering Corp will void the product warranties. All specifications published in this document are subject to change; Banner reserves the right to modify product specifications or update documentation at any time. Specifications and product information in English supersede that which is provided in any other language. For the most recent version of any documentation, refer to: www.bannerengineering.com.

For patent information, see www.bannerengineering.com/patents.

© Banner Engineering Corp. All rights reserved.
www.bannerengineering.com