APC-18 Air Purge Collar for 18 mm Sensors

Datasheet

For Use with 18 mm Threaded-Barrel Sensors

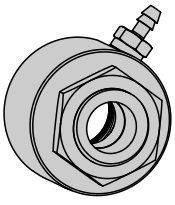

- Positive air pressure prevents water, dust, and other airborne contaminants from collecting on the sensor face
- Air flow helps cool sensors affected by ambient heat in the sensing environment
- Works with many of Banner Engineering's 18 mm threaded-barrel photoelectric and temperature sensors

Note: Air temperature affects the speed of sound. The APC-18 Air Purge Collar should not be used with ultrasonic sensors.

Installation

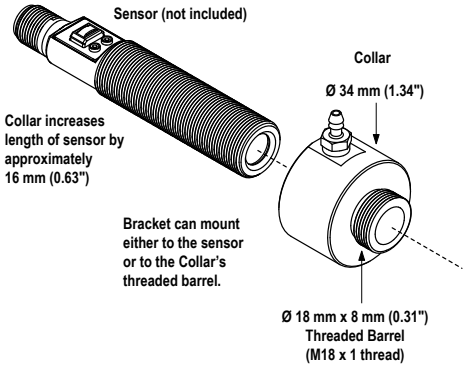

1. The internal and external threads of the Air Purge Collar provide two mounting options for 18 mm threaded-barrel sensors:
   - Thread the collar all the way onto the sensor, then mount the collar in the mounting bracket by its external threads, or
   - Install the sensor in the mounting bracket, then thread the collar all the way onto the sensor
2. Attach the air supply to the collar by pushing a 1/8-in ID air hose onto the air connection.

Note: To prevent contamination on the sensor face, use clean, dry, instrument-quality air.

Note: For best sensing results, teach the sensor while air is flowing.

Models and **Specifications**

Model Number	Housing Material	Air **Connection**
APC-18	Stainless steel	1/8 × 10-32 stainless steel barb fitting; connects to 1/8-in ID hose
APC-18P	Acetal (Delrin)	1/8 × 10-32 stainless steel barb fitting; connects to 1/8-in ID hose
APC-18M4	Acetal (Delrin)	4mm × 10-32 stainless steel barb fitting; connects to 1/8-in ID hose

Recommended Air Flow Rate
10 liters per minute (0.35 SCFM)

Approximate Input Pressure
0.7 psi

Banner Engineering Corp. Limited Warranty

Banner Engineering Corp. warrants its products to be free from defects in material and workmanship for one year following the date of shipment. Banner Engineering Corp. will repair or replace, free of charge, any product of its manufacture which, at the time it is returned to the factory, is found to have been defective during the warranty period. This warranty does not cover damage or liability for misuse, abuse, or the improper application or installation of the Banner product.

THIS LIMITED WARRANTY IS EXCLUSIVE AND IN LIEU OF ALL OTHER WARRANTIES WHETHER EXPRESS OR IMPLIED (INCLUDING, WITHOUT LIMITATION, ANY WARRANTY OF MERCHANTABILITY OR FITNESS FOR A PARTICULAR PURPOSE), AND WHETHER ARISING UNDER COURSE OF PERFORMANCE, COURSE OF DEALING OR TRADE USAGE.

This Warranty is exclusive and limited to repair or, at the discretion of Banner Engineering Corp., replacement. IN NO EVENT SHALL BANNER ENGINEERING CORP. BE LIABLE TO BUYER OR ANY OTHER PERSON OR ENTITY FOR ANY EXTRA COSTS, EXPENSES, LOSSES, LOSS OF PROFITS, OR ANY INCIDENTAL, CONSEQUENTIAL OR SPECIAL DAMAGES RESULTING FROM ANY PRODUCT DEFECT OR FROM THE USE OR INABILITY TO USE THE PRODUCT, WHETHER ARISING IN CONTRACT OR WARRANTY, STATUTE, TORT, STRICT LIABILITY, NEGLIGENCE, OR OTHERWISE.

Banner Engineering Corp. reserves the right to change, modify or improve the design of the product without assuming any obligations or liabilities relating to any product previously manufactured by Banner Engineering Corp. Any misuse, abuse, or improper application or installation of this product or use of the product for personal protection applications when the product is identified as not intended for such purposes will void the product warranty. Any modifications to this product without prior express approval by Banner Engineering Corp will void the product warranties. All specifications published in this document are subject to change; Banner reserves the right to modify product specifications or update documentation at any time. Specifications and product information in English supersede that which is provided in any other language. For the most recent version of any documentation, refer to: www.bannerengineering.com.

Original Document
123618 Rev. C

6 June 2017

123618

ПРОМЭЛЕКТРОНИКА/ sales@prom-elec.com