TABLE 1	
P/N	MODEL NO.
809381	CSB-M1241DB9
811200	CSB-M1241DB9-CNMW01

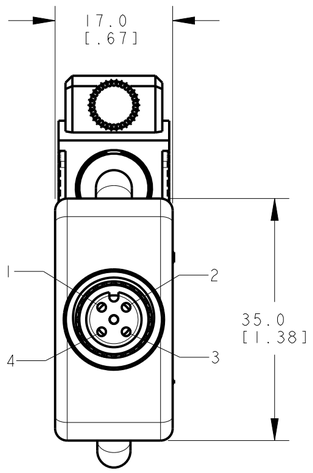

FEMALE CONNECTOR
TRUNK

1. BROWN
2. WHITE
3. BLUE
4. BLACK

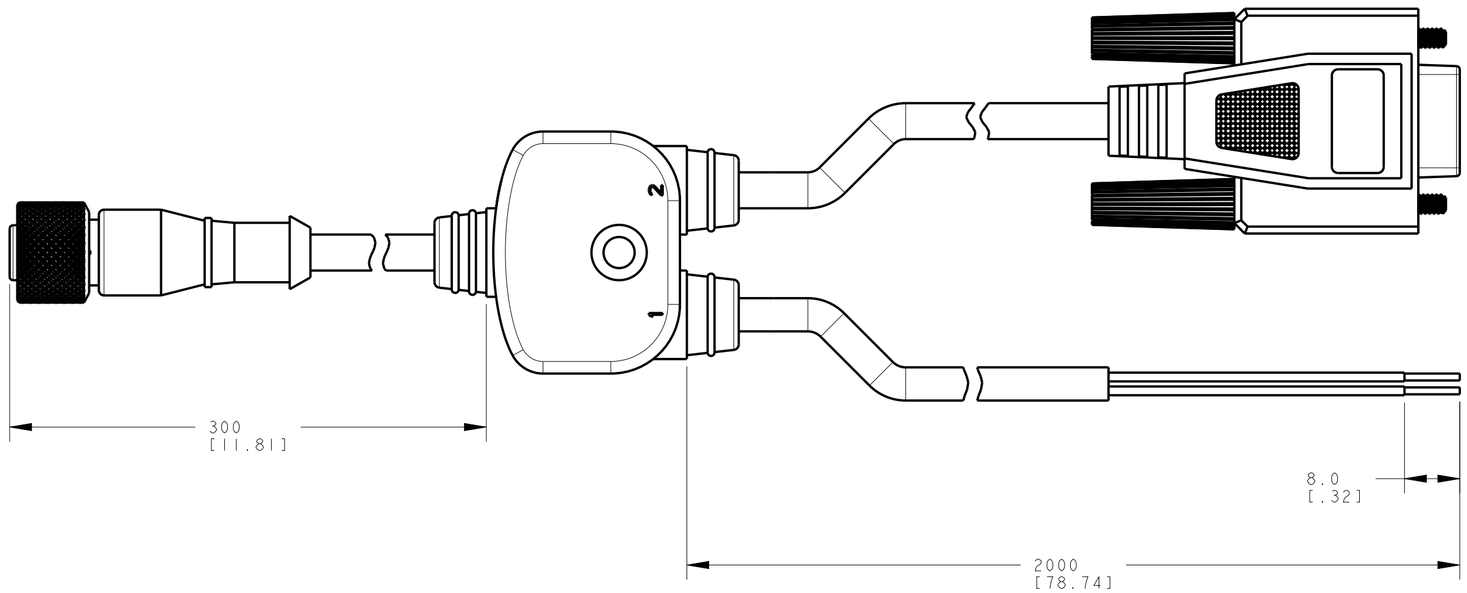

BRANCH 2

2. WHITE
3. BLACK
5. BLUE
SH. SHIELD

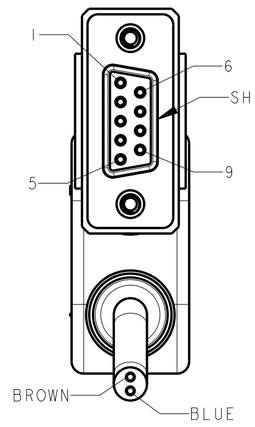

BRANCH 1

SCHEMATIC

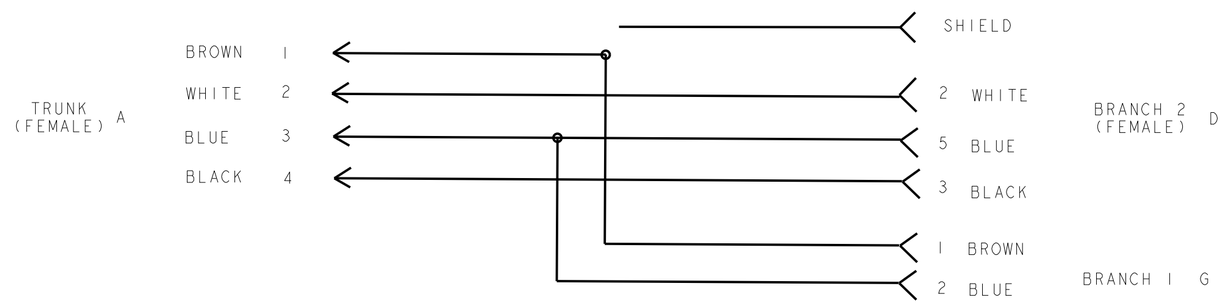

NOTES:
1. ALL DIMENSIONS ARE MILLIMETERS [INCHES] UNLESS OTHERWISE NOTED.
2. REFER TO "www.bannerengineering.com" FOR ADDITIONAL DATA AND SPECIFICATIONS.

This drawing is the property of BANNER ENGINEERING CORP. Any use or reproduction, in any form, without prior written permission of Banner is prohibited.
© 2015 Banner Engineering Corp.

THIRD ANGLE PROJECTION

BANNER ENGINEERING CORP.
www.bannerengineering.com

TITLE
CSB-M124XDB9

SIZE	DRAWING NO.	REV.
C	218171	B
SCALE 3:2	SHEET 1 OF 1	

CREO

ПРОМЭЛЕКТРОНИКА/ sales@prom-elec.com