MODEL NO.	"L"	P/N
PBT6I.5TS3	457 [I8]	42853
PBT67TS3	2I34 [84]	6II77
PBT62.5TS3	750 [29.5]	80760
PBT62TS3	6I0 [24]	97333
PBT63TS3	9I4 [36]	97332
PBT64TS3	I2I9 [48]	97334

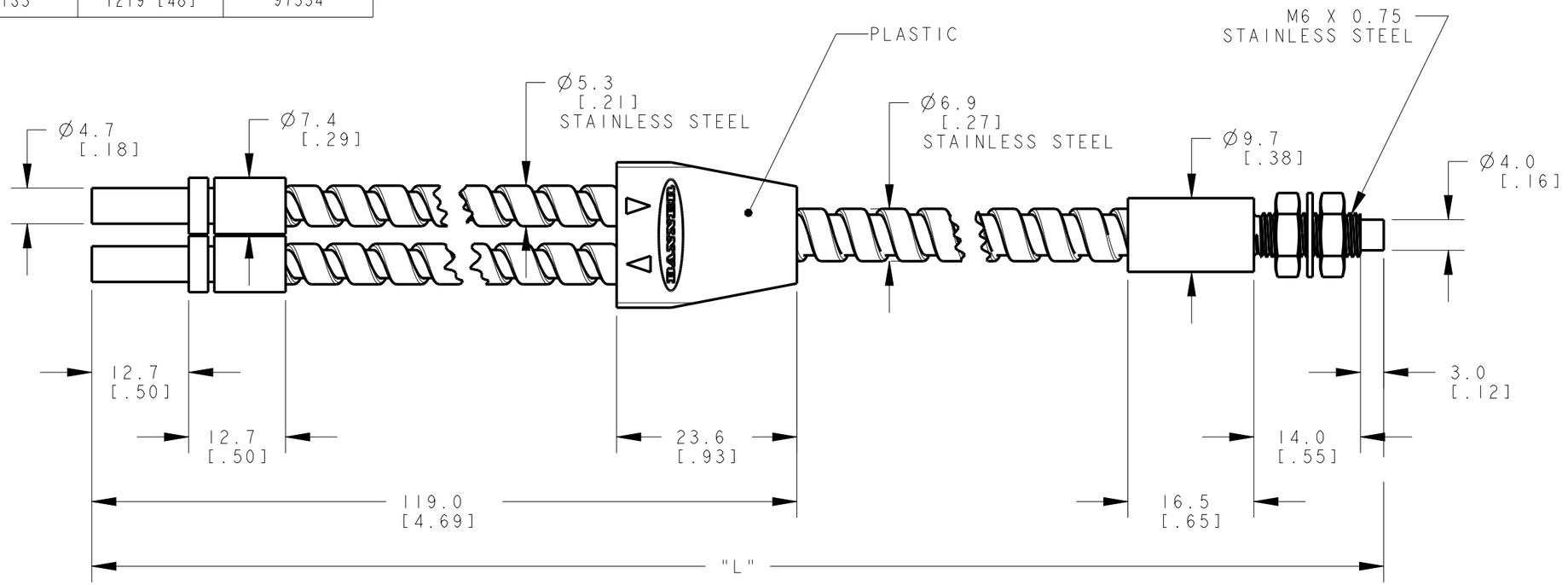

NOTES:
I. ALL DIMENSIONS ARE MILLIMETERS [INCHES] UNLESS OTHERWISE NOTED.
2. REFER TO "www.bannerengineering.com" FOR ADDITIONAL DATA AND SPECIFICATIONS.

This drawing is the property of BANNER ENGINEERING CORP. Any use or reproduction, in any form, without prior written permission of Banner is prohibited.
© 2015 Banner Engineering Corp.

THIRD ANGLE PROJECTION

BANNER ENGINEERING CORP.
www.bannerengineering.com

TITLE

PBT6 TS3 TERMINATION

SIZE	DRAWING NO.	REV.
B	**I94016**	**A**
SCALE 3:2	SHEET I OF I	

CREO

ПРОМЭЛЕКТРОНИКА/ sales@prom-elec.com