MODEL NO.	"L"	P/N
PBCT4100U	30480 [1200]	79506
PBCT460U	18288 [720]	51771
PBCT415U	4572 [180]	51769
PBCT430U	9144 [360]	45053
PBCT46U	2000 [79]	35214

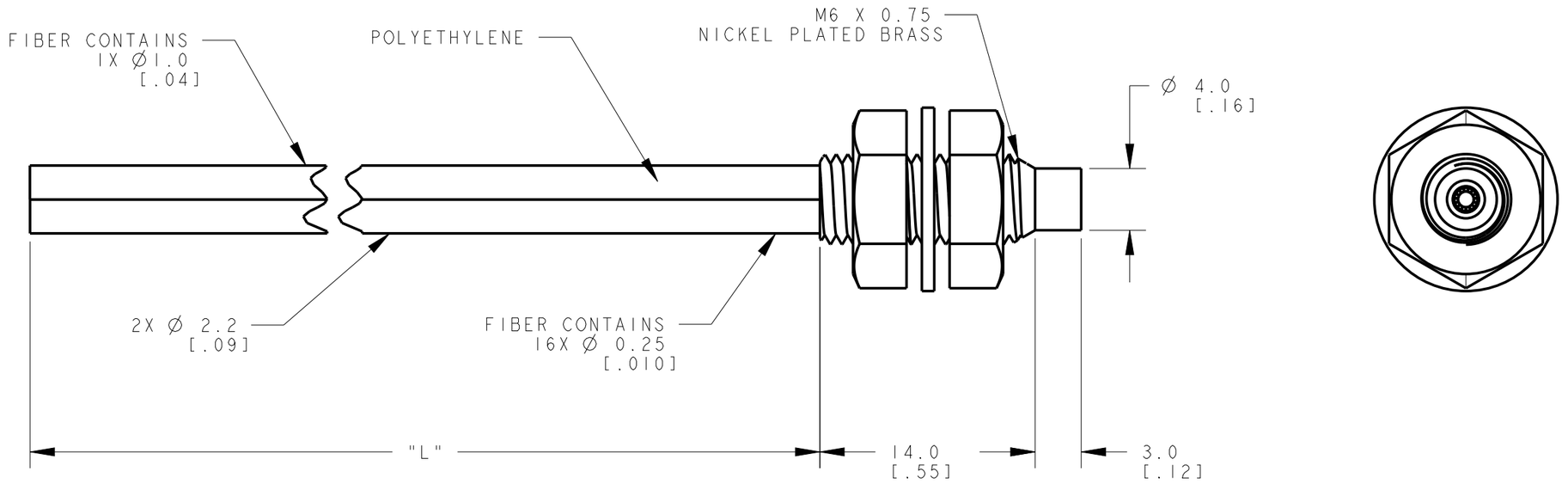

NOTES:
1. ALL DIMENSIONS ARE MILLIMETERS [INCHES] UNLESS OTHERWISE NOTED.
2. REFER TO "www.bannerengineering.com" FOR ADDITIONAL DATA AND SPECIFICATIONS.

This drawing is the property of BANNER ENGINEERING CORP. Any use or reproduction, in any form, without prior written permission of Banner is prohibited.
© Banner Engineering Corp.

THIRD ANGLE PROJECTION

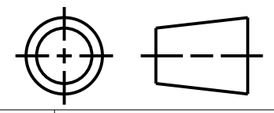

BANNER ENGINEERING CORP.
www.bannerengineering.com

TITLE

PBCT4 SERIES UNTERMINATED

SIZE	DRAWING NO.	REV.
B	161883	A
SCALE 3:1	SHEET 1 OF 1	

CREO

ПРОМЭЛЕКТРОНИКА/ sales@prom-elec.com