SI-GL42 Series Locking-Style Safety Interlock Switch Instruction Manual

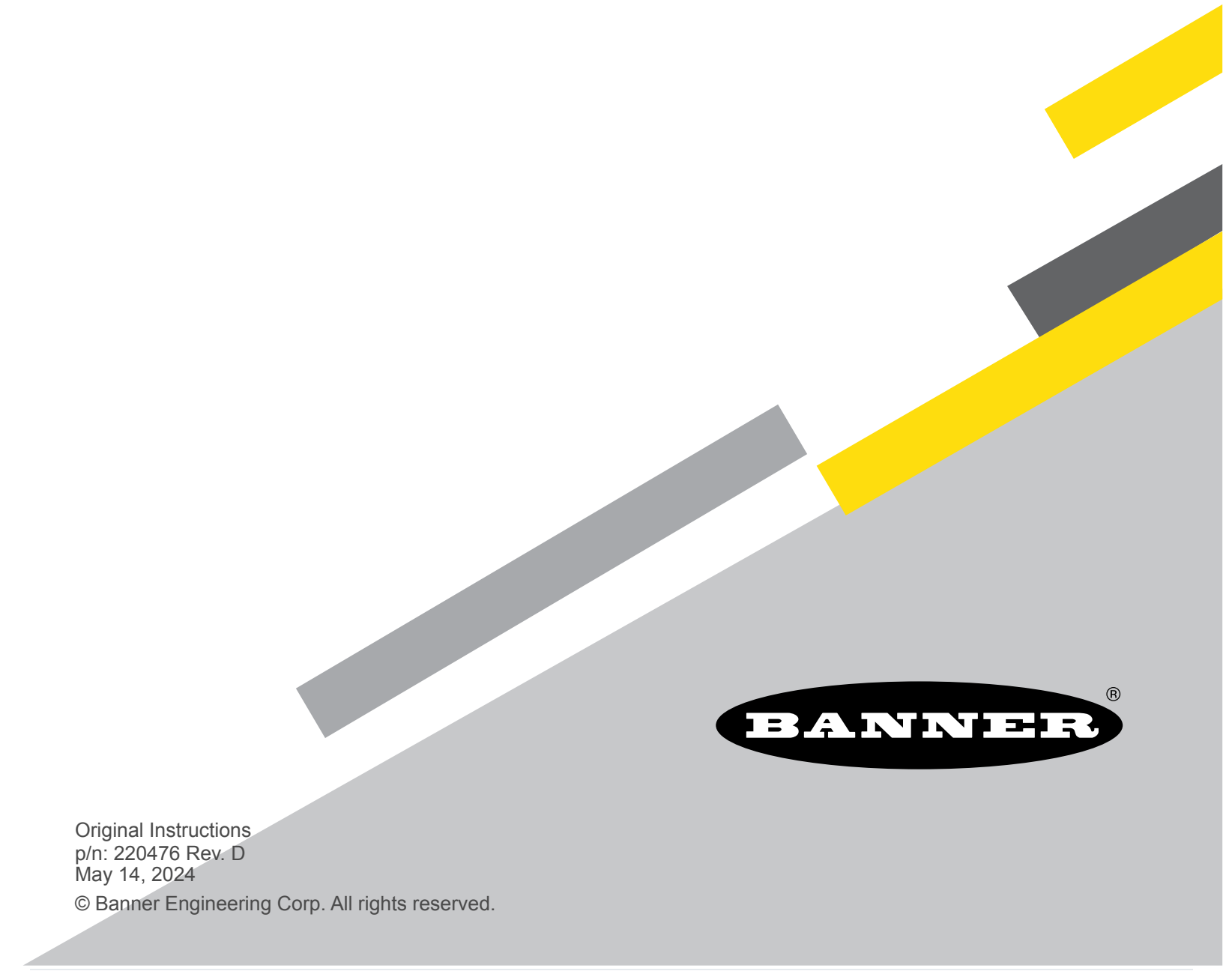

Original Instructions
p/n: 220476 Rev. D
May 14, 2024

© Banner Engineering Corp. All rights reserved.

ПРОМЭЛЕКТРОНИКА/ sales@prom-elec.com

Contents

Chapter 1 SI-GL42 Product Overview

Models 3
Important... Read this before proceeding! 5
Overview 5

Chapter 2 Installation Instructions

Installation Requirements 7
Pass-Through Hazards and Perimeter Guarding 8
Mechanical Installation 8
Position the Actuator Head 9
Install the Switch and Actuator 10
Align the SI-QM-SMFA-2 11
Escape/Emergency/Auxiliary Release Mechanism 11
Access the Wiring Chamber 14
Wiring the Terminals 14
Connection to a Machine 14

Chapter 3 Operating Instructions

Checkout Procedures 17
Initial and Daily Checks 17
Periodic Checks 17

Chapter 4 Specifications

Dimensions 20

Chapter 5 Accessories

Actuators and Unlock Mechanisms 23
Plastic Conduit Adapter 23
Cable Glands 24
Universal (Input) Safety Modules 24
Safety Controllers 24

Chapter 6 Product Support and Maintenance

Repairs 25
EU/UK Declaration of Conformity (DoC) 25
Banner Engineering Corp Limited Warranty 25
..... 26

Chapter Contents

Models 3
Important... Read this before proceeding! 5
Overview 5

Chapter 1 SI-GL42 Product Overview

SI-GL42 Series Locking-Style Safety Interlock Switch for interlocking and position monitoring



- Positive opening safety contacts (per IEC 60947-5-1)
- Contact monitors both the presence of the actuator and if it is locked into the interlock
- Choice of two locking mechanism types:
  - Spring lock with energized solenoid release
  - Energized solenoid lock with spring release
- All models have an integrated manual release mechanism (front and back)
- Four stainless steel actuator options
- Actuator head rotatable in 90° increments providing five actuator positions (one vertical option)
- Many different actuator and monitoring contact configurations to satisfy any application
- Lightweight yet robust design (plastic body but the mechanically stressed components like the rotating head are metal)
- IP67 environmental rating making the unit suitable for demanding industrial environments
- Insulated device (IEC 60947-5-1)
- M12 connector options (contact Banner Engineering for pre-wired M12 connector options)

Models

A complete safety system is typically made up of two interlocks, two actuators, two cables, and a safety monitoring device. The use of an emergency release mechanism depends on the application.

To order an interlock body model, insert **S** for Spring Lock/Solenoid Unlock or **M** for Solenoid Lock/Spring Unlock. For example: **SI-GL42D_20-20** can become **SI-GL42DM20-20** or **SI-GL42DS20-20**,

Interlock Body Model	Solenoid Voltage	Actuator Contacts	Solenoid Monitor Contacts	Actuator Engaged and Locked	Actuator Engaged but Not Locked	Actuator Unlocked and Removed
SI-GL42D_11-11	24 V AC/ DC	1 NC/1 NO	1 NC/1 NO	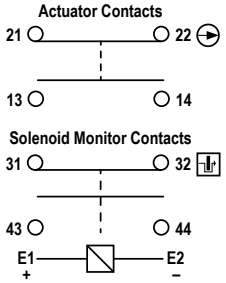	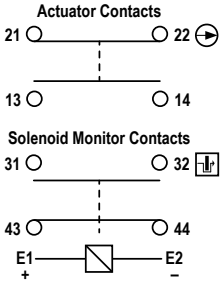	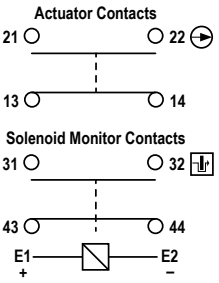

Continued on page 4

© Banner Engineering Corp. All rights reserved.

Continued from page 3

Interlock Body Model	Solenoid Voltage	Actuator Contacts	Solenoid Monitor Contacts	Actuator Engaged and Locked	Actuator Engaged but Not Locked	Actuator Unlocked and Removed
SI-GL42D_20-11	24 V AC/ DC	2 NC	1 NC/1 NO	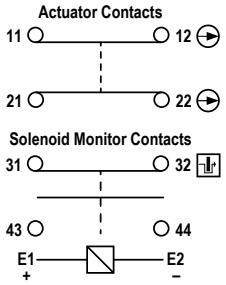	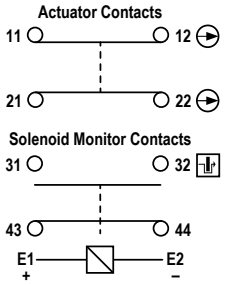	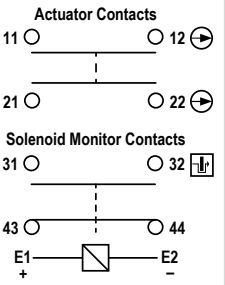
SI-GL42D_21-10	24 V AC/ DC	2 NC/1 NO	1 NC	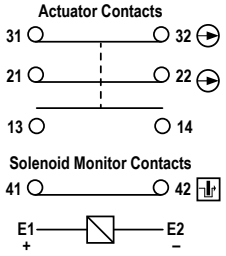	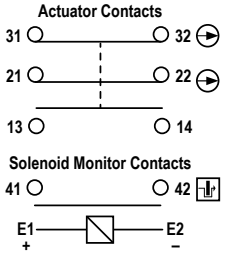	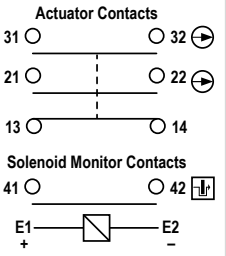
SI-GL42D_30-10	24 V AC/ DC	3 NC	1 NC	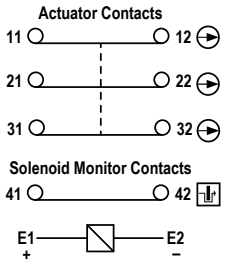	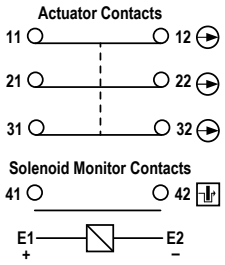	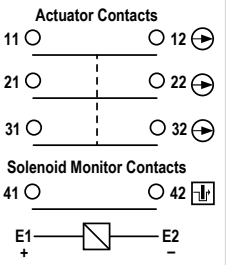
SI-GL42D_20-20	24 V AC/ DC	2 NC	2 NC	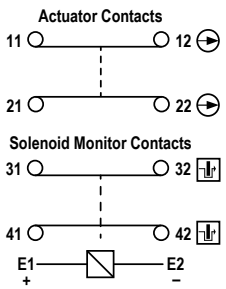	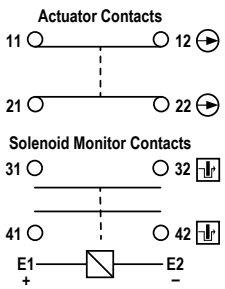	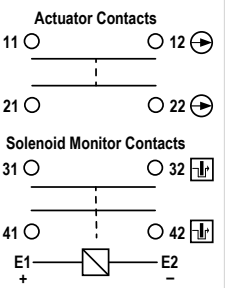
SI-GL42D_01-21	24 V AC/ DC	1 NO	2 NC/1 NO	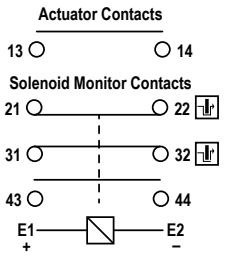	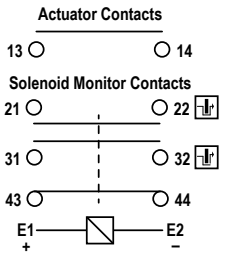	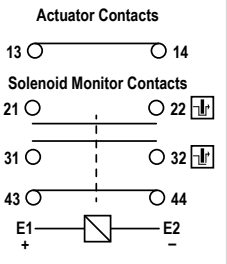

Continued on page 5

© Banner Engineering Corp. All rights reserved.

Continued from page 4

Interlock Body Model	Solenoid Voltage	Actuator Contacts	Solenoid Monitor Contacts	Actuator Engaged and Locked	Actuator Engaged but Not Locked	Actuator Unlocked and Removed
SI-GL42D_10-21	24 V AC/ DC	1 NC	2 NC/1 NO	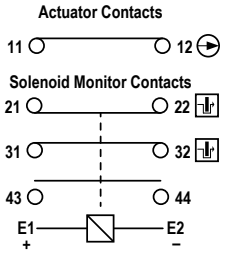	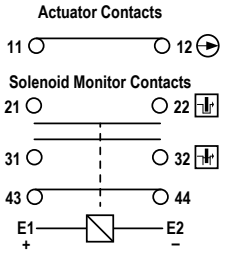	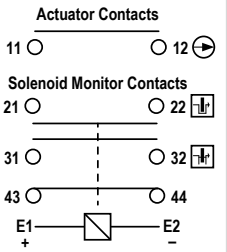

⊕—Signifies which contacts are positive opening safety contacts (per IEC 60947-5-1). This contact is forced open by the action of removing the actuator from the Interlock.

—Signifies which contact is positively connected to the locking mechanism. This contact cannot close if the actuator is not present in the interlock.

The model table lists only the interlock body, a required actuator is ordered separately. Emergency release mechanisms are also ordered separately. For the complete lists of actuators and emergency release mechanisms see "Accessories" on page 23.

Important... Read this before proceeding!

The user is responsible for satisfying all local, state, and national laws, rules, codes, and regulations relating to the use of this product and its application. Banner Engineering Corp. has made every effort to provide complete application, installation, operation, and maintenance instructions. Please contact a Banner Applications Engineer with any questions regarding this product.

The user is responsible for making sure that all machine operators, maintenance personnel, electricians, and supervisors are thoroughly familiar with and understand all instructions regarding the installation, maintenance, and use of this product, and with the machinery it controls. The user and any personnel involved with the installation and use of this product must be thoroughly familiar with all applicable standards, some of which are listed within the specifications. Banner Engineering Corp. makes no claim regarding a specific recommendation of any organization, the accuracy or effectiveness of any information provided, or the appropriateness of the provided information for a specific application.

Overview

The SI-GL42 Series Locking-Style Safety Interlock Switch with guard locking capability can be used to monitor the position of a guard to detect its movement, opening, or removal.

The SI-GL42 Interlock Switch can also be used to secure the guard in place to allow the hazard time to stop before the guard is opened. This allows the guard to be located closer to the hazard than otherwise possible in applications where the guard can be opened and the hazard can be accessed. A guard can be a gate, door, cover, panel, barrier, or other physical means that separates individuals from the hazard. Safety switches will issue a signal to the machine control system to prevent or stop hazardous situations when the guard is not in the proper position.

The SI-GL42 Interlock Switch is designed for guard locking applications. There are two styles available:

- Spring Lock, Solenoid Unlock (Models **SI-GL42DS..**)—The actuator is mechanically locked when it is fully inserted into the actuator head. The actuator is unlocked by applying voltage to the solenoid.
- Solenoid Lock, Spring Unlock (Models **SI-GL42DM..**)—The fully inserted actuator is locked when voltage is applied to the solenoid. The actuator is unlocked when voltage is removed from the solenoid.

The SI-GL42 Interlock Switch is a type 2 locking fixture with an electromechanical latching device and low-level coding according to ISO 14119.

Applications involving the use of the SI-GL42 Series Locking-Style Safety Interlock Switch should take into consideration the following standards:

- ISO 13849-1 Safety of Machinery – Safety-Related Parts of Control Systems – Part 1: General Principles for Design
- ISO 12100 Safety of Machinery – General Principles for Design – Risk Assessment and Risk Reduction

© Banner Engineering Corp. All rights reserved.

- ISO 14119 (EN 1088) Interlocking Devices Associated with Guards – Principles for Design and Selection
- ISO 13857 Safety of Machinery – Safety Distances to Prevent Hazard Zones Being Reached
- ANSI B11.0 Safety of Machinery
- ANSI B11.19 Performance Requirements for Risk Reduction Measures: Safeguarding and Other Means of Reducing Risk

© Banner Engineering Corp. All rights reserved.

Chapter Contents

Installation Requirements 7
Pass-Through Hazards and Perimeter Guarding 8
Mechanical Installation 8
Access the Wiring Chamber 14
Connection to a Machine 14

Chapter 2 Installation Instructions

Installation Requirements

The following general requirements and considerations apply to the installation of interlocked gates and guards for the purpose of safeguarding. In addition, the user must refer to the relevant regulations and comply with all necessary requirements. See ANSI B11.19, or ISO 14119 and ISO 14120, or the appropriate standard.

Hazards guarded by the interlocked guard must be prevented from operating until the guard is closed; a stop command must be issued to the guarded machine if the guard opens while the hazard is present. Closing the guard must not, by itself, initiate hazardous motion; a separate procedure must be required to initiate the motion. The safety switches must not be used as a mechanical or end-of-travel stop.

Locate the guard an adequate distance from the danger zone (so the hazard has time to stop before the guard is opened sufficiently to provide access to the hazard). The guard must open either laterally or away from the hazard, not into the safeguarded area. The guard also should not be able to close by itself and activate the interlocking circuitry. The installation must prevent personnel from reaching over, under, around or through the guard to access the hazard. Any openings in the guard must not allow access to the hazard—see ANSI B11.19, ISO 13857, or the appropriate standard.

The guard must be strong enough and designed to protect personnel and contain hazards within the guarded area that can be ejected, dropped, or emitted by the machine. Design and install the safety switches and actuators so that they cannot be easily defeated. Measures to minimize defeat (bypassing) of interlocking safety switches include:

- Minimizing motivation for defeating interlocking by providing training, supervision, and efficient means for machine setup/adjustment, operation, and maintenance
- Limiting accessibility to the interlocking device, such as mounting out of reach, mounting behind a physical obstruction, mounting in a concealed position
- Mounting them securely so that their physical position cannot shift, using reliable fasteners that require a tool to remove
- Preventing the switch or the actuator from being disassembled or repositioned that compromises the safety function (for example, welding, one-way screws, riveting)

Mounting slots in the housing, if provided, are for initial adjustment only; final mounting holes (round) must be used for permanent location. The switches, actuating systems, and actuators must not be used as a mechanical or end-of-travel stop.

The normally closed safety contacts are of a "positive-opening" design. Positive-opening operation causes the contacts to be forced open, without the use of springs, when the actuator is disengaged or moved from its home position. In addition, the switch(es) must be mounted in a "positive mode", to move/disengage the actuating system and actuator from its home position and open the normally closed contact, when the guard opens.

The overall control concept, into which the switch has been integrated, must be validated in accordance with ISO 13849-2 or evaluated according to IEC 62061.

See "Mechanical Installation" on page 8, "Connection to a Machine" on page 14, and "Specifications" on page 19.

© Banner Engineering Corp. All rights reserved.

WARNING:

- **Properly Install the Interlocked Guards**
- Failure to follow these guidelines could result in serious injury or death.
- At a minimum, the interlocked guard must prevent hazards when not fully closed and must prevent access to the hazards through any opening in the guard.
- Install the safety switches and actuators so they cannot be easily defeated and are not used as a mechanical or end-of-travel stop. Mount at least one switch in a positive mode and verify it opens the normally closed contact when the guard opens.
- The user must refer to the relevant regulations and comply with all necessary requirements. See ANSI B11.19, or ISO 14119 and ISO 14120, or the appropriate standard.

CAUTION:

- **Do not use the safety switch as a mechanical or end-of-travel stop.**
- Catastrophic damage can cause the safety switch to fail in an unsafe manner (that is, loss of the switching action).
- Limit the movement or rotation of the guard to prevent damage to the safety switch or the actuator.

Pass-Through Hazards and Perimeter Guarding

A pass-through hazard is associated with applications where personnel may pass through a safeguard (which issues a stop command to remove the hazard), and then continues into the guarded area, such as in perimeter guarding. Subsequently, their presence is no longer detected, and the related danger becomes the unexpected start or restart of the machine while personnel are within the guarded area.

Eliminate or reduce pass-through hazards whenever possible—see ANSI B11.19 and ANSI B11.20 or ISO 11161. One method to mitigate the risk is to ensure that once tripped, either the safeguarding device, the safety related part of the control system, or the guarded machine's MSCs/MPCEs will latch in an OFF condition. The latch must require a deliberate manual action to reset that is separate from the normal means of machine cycle initiation.

This method relies upon the location of the reset switch as well as safe work practices and procedures to prevent an unexpected start or restart of the guarded machine. All reset switches must be:

- Outside the guarded area
- Located to allow the switch operator a full, unobstructed view of the entire guarded area while the reset is performed
- Out of reach from within the guarded area
- Protected against unauthorized or inadvertent operation (such as through the use of rings or guards)

If any areas within the guarded area are not visible from the reset switch, additional safeguarding must be provided.

WARNING:

- **Perimeter guarding applications**
- Failure to observe this warning could result in serious injury or death.
- Use lockout/tagout procedures per ANSI Z244.1, or use additional safeguarding as described by ANSI B11.19 safety requirements or other applicable standards if a passthrough hazard cannot be eliminated or reduced to an acceptable level of risk.

Mechanical Installation

IMPORTANT: Install a safety switch in a manner that discourages tampering or defeat. Mount switches to prevent bypassing of the switching function at the terminal chamber or Quick Disconnect (QD). A switch and its actuator must never be used as a mechanical stop. Overtravel may cause damage to switch.

© Banner Engineering Corp. All rights reserved.

All mounting hardware is supplied by the user. Fasteners must be of sufficient strength to guard against breakage. Use of permanent fasteners or locking hardware is recommended to prevent the loosening or displacement of the actuator and the switch body. The mounting holes (5.3 mm) in the switch body accept M5 (#10) hardware. The mounting holes in the various actuators accept M4 (#6) (for **SI-QM-SSA-2**, 4.5 mm) or M5 (#10) (for the other actuators, 5.1 or 5.5 mm).

Mount the sensor and actuator such that the position cannot be changed after installation/adjustment. Mount the switch securely on a solid, stationary surface. Prevent the loosening of mounting hardware by using lock washers, thread-locking compound, etc. Only use slots for initial positioning. Pins, dowels, and splines can be used to prevent movement of the switch and the actuator.

Locate the switch body and actuator to allow access for functional checks, maintenance, service or replacement, and emergency/escape release (if needed). The installation should provide suitable clearances, be readily accessible, and allow access to the actuator and sensor.

CAUTION: Do not overtighten the units during installation. Overtightening can twist the housing and affect the sensor/switch performance.

IMPORTANT: It is the responsibility of the machine builder (user) to make sure the wiring/cabling is not easily manipulated by an operator to defeat the safety function(s); for example, cannot remove a switch from the system.

Actuator minimum door radius

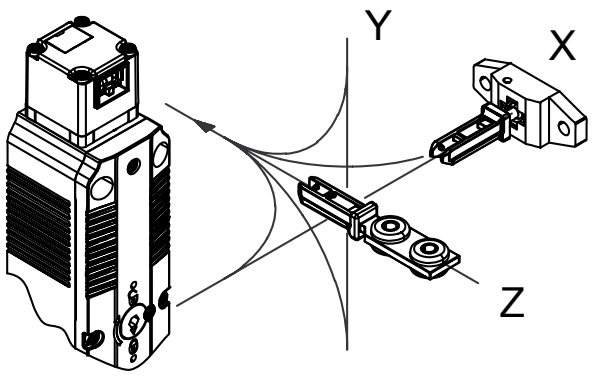

Each actuator style has its own minimum door radius to ensure that its tongue smoothly enters the opening of the head of the switch.

- **SI-QM-SSA-2**: 800 mm
- **SI-QM-SSA-2RA**: 600 mm
- **SI-QM-SMFA-3**: 400 mm
- **SI-QM-SMFA-2**: 150 mm

Position the Actuator Head

The actuator head can be rotated in increments of 90° to create eight possible actuator positions (four horizontal and four vertical positions). Follow these steps to rotate the head.

The actuator can enter the actuator head either horizontally (at a right angle to the switch length) or vertically (in-line with the switch length). If vertical actuation is required, move the small cover from the opening in the top of the head to the opening in the side of the head. To rotate the head:

1. Loosen the four screws (TX10) on top of the actuator head.
2. Set the actuator head to the desired direction.
3. Tighten the four screws to 1.6 N·m.
4. Verify the unused actuator slot is closed with the sealing cap.

© Banner Engineering Corp. All rights reserved.

Install the Switch and Actuator

Follow these steps to mount the switch and actuator.

CAUTION: When ambient temperatures are above 40 °C, the housing temperature may be hot enough to cause a dangerous situation. Do not allow the housing to come into contact with people or with flammable material.

1. Verify the mounting surface is flat.
2. Mount the safety switch, tightening the four M5 (#10) screws to 2 N·m.
3. Insert the actuator, in the correct position, into the head of the switch until the actuator molding rests against the head's housing.

Actuator position

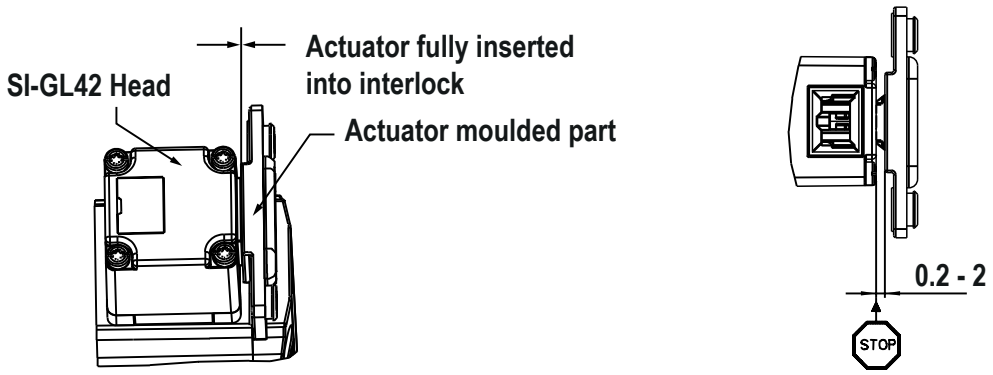

There is a 2 mm overtravel between the switch head and the actuator. Set the guard's stop in this overtravel region (overtravel range 0.2–2 mm).

4. Connect the actuator to the guard in a tamper-proof manner.

Actuator dimensions and necessary minimal travel

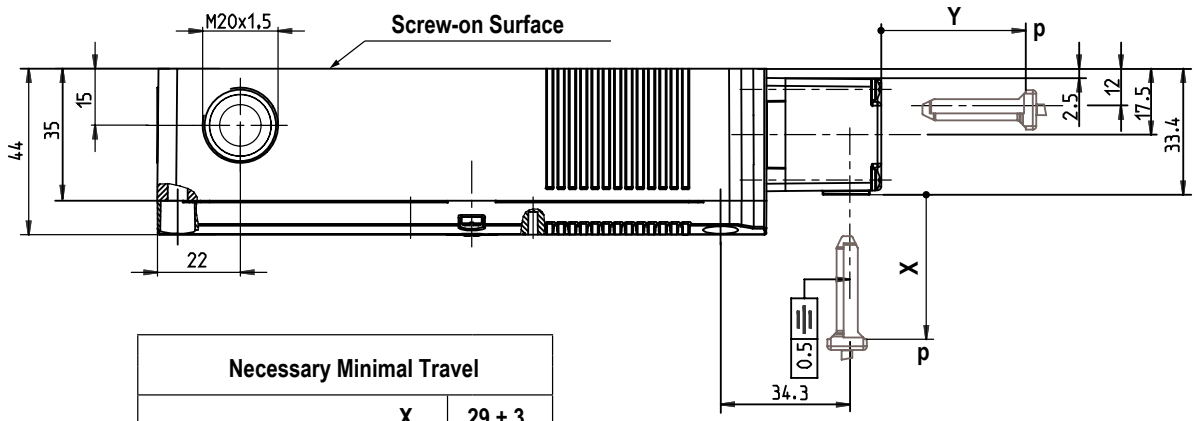

Necessary Minimal Travel	
X	29 + 3
Y	29 + 3

When the actuator is withdrawn from the switch's head, the active axis must be aligned in accordance to the tolerances shown.

5. Verify no lateral forces are occurring between the actuator and the switch head.
   Refer to the dimensions drawing to see the fully inserted actuator placement.

© Banner Engineering Corp. All rights reserved.

Align the SI-QM-SMFA-2

All measurements are listed in millimeters, unless noted otherwise.

SI-QM-SMFA-2 dimensions

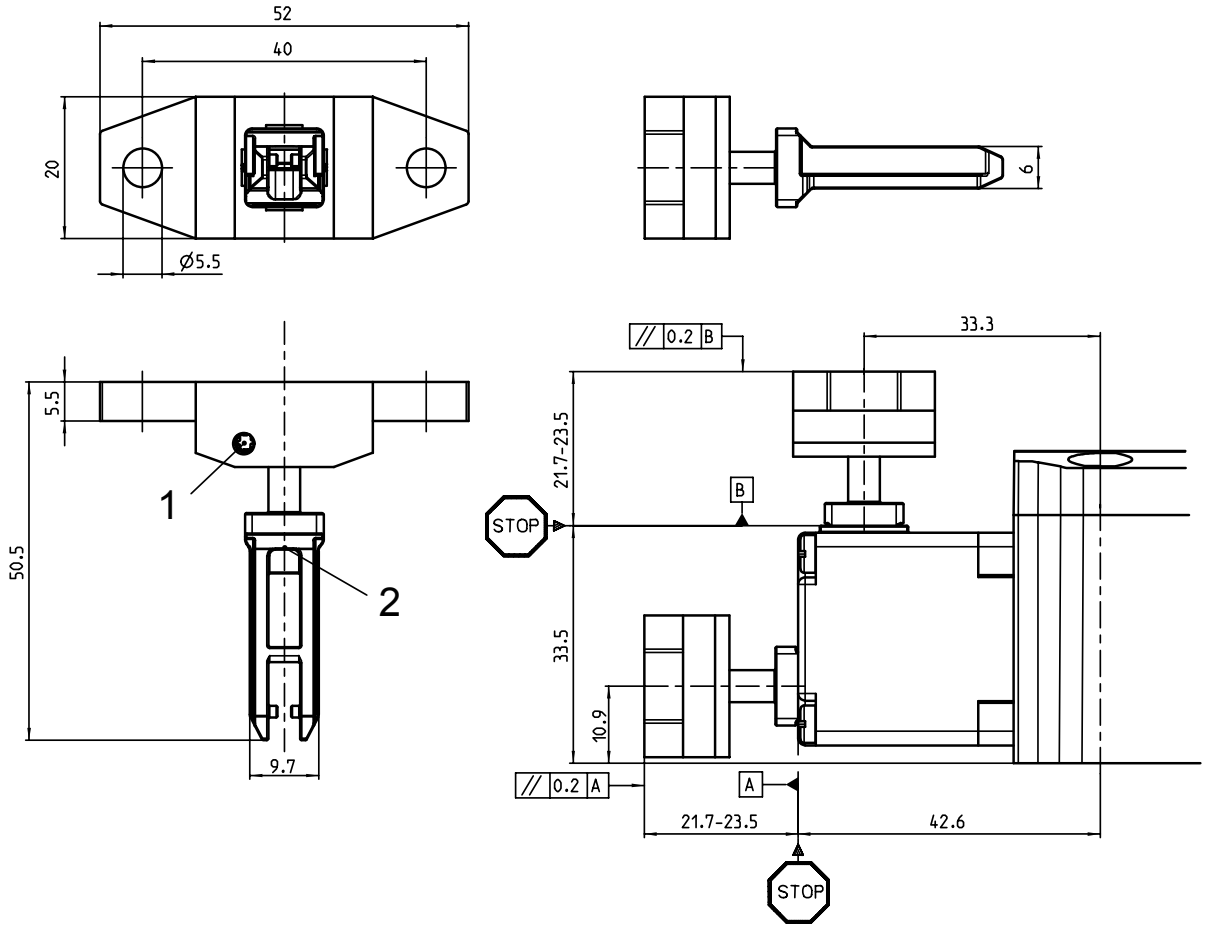

1. Align and fasten **SI-QM-SMFA-2** to the hinged guard as described in "Install the Switch and Actuator " on page 10.
2. Loosen one of the small alignment screws (1) (whichever one is easiest to access with the door slightly open) until the actuator tongue (2) can be swiveled without spring force.
3. Insert the actuator tongue (2) into the mounted switch head until the actuator comes into contact with the head housing, the spring in the SI-QM-SMFA-2 must not be loaded.
4. Pull the actuator tongue (2) out of the switch head by swinging the guard open 25 mm.

   The end of the tongue will still be in the opening of the switch head. The head must still be equipped with an anti-rotation device.
5. Tighten the small alignment screw (1) to 1.5 N·m.
6. Open and close the guard.

   The round shaft of the actuator tongue must only move in the spring bearing (actuator housing). The shaft must not support itself on the housing and cause an overload of the actuator tongue.
7. Verify the actuator tongue moves into the switch head without colliding with the head. Verify the opposite small alignment screw (1) was tightened with a torque of 1.5 N·m.

Escape/Emergency/Auxiliary Release Mechanism

CAUTION: Before restarting normal operations, verify the auxiliary/escape/emergency release is in the locked (protective) position.

© Banner Engineering Corp. All rights reserved.

CAUTION: If the escape release mechanism is used, the switch must be mounted within the hazardous area (must be accessible to an operator inside the hazardous area). The escape release mechanism should only be used to exit the hazardous area in case of a system failure. The escape release mechanism must not be accessible from outside of the hazardous area.

Operating the Auxiliary Release Mechanism

The auxiliary release mechanism is part of every switch. It is built into the cover.

Auxiliary release mechanism

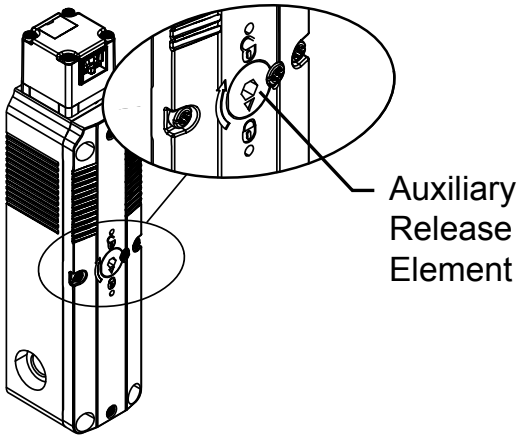

Operate the auxiliary release with only the 4 mm hexagon socket if the latching device fails.

1. Raise the lock screw, TX10, enough so that the element can be turned.
2. Turn the release element 90° with a hexagon wrench (M4, SW4). From to .

   The actuator can now be withdrawn. The NC contacts marked with this symbol will open.
3. Turn the release element back to its original position (locked) before restarting normal operation.
4. Screw in the lock screw (0.5 N·m) and seal in place with the screw-locking compound.

To prevent tampering, seal the rear access point (e.g. with locking compound) after installation if it is accessible.

Install the Emergency Release Mechanism

An emergency release mechanism can be installed on the front cover (**SI-GL42-ERS-F-1**) or on the back of the unit (**SI-GL42-ERS-B-1**) depending on how the switch body is mounted.

The emergency release mechanism can be used as an emergency release from outside the danger zone and as an escape release from inside the danger zone. It is the responsibility of the user to ensure the mounting complies with the requirements of ISO 14119 or other appropriate standards.

Emergency release mechanism



© Banner Engineering Corp. All rights reserved.

1. Remove the lock screw.
2. Place the mechanism onto the cover with the lock and unlock symbols toward the head of the switch and the side notches positioned over the cover mounting screws.
3. Secure into place with the included mounting screws (torque to 0.5 N·m).
4. Keep the key (flat piece of metal) in a secure location.
   The key is needed to reset from the unlocked to the locked position.

Install the emergency release mechanism to the back of the switch body the same as for the cover, except:

- The lock screw does not need to be removed
- The lock, arrow, and unlock symbols should be oriented to match what is on the switch body

Unlock the Emergency Release Mechanism

Follow these steps to unlock the actuator with the emergency release mechanism.

1. Turn the lever element 90° in the clockwise direction.
2. Remove the actuator.

Reset the Emergency Release Mechanism

Resetting the emergency release mechanism back to the locked position requires the key.

Reset the emergency release mechanism

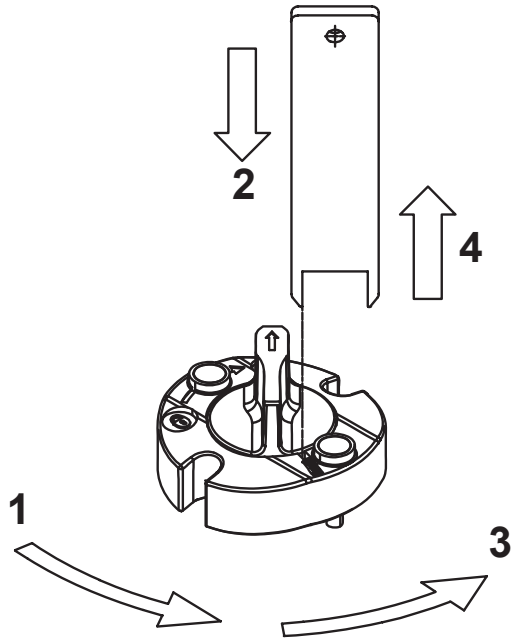

1. Turn the lever in the counterclockwise direction to the mounting screw position.
2. While holding the lever in the counterclockwise direction, insert the key in the small slot near the lower mounting screw. You should feel some resistance.
3. Turn the lever as far as it will go in the counterclockwise direction. The lever should turn to the locked symbol.
4. Remove the key.

If the back-access point is unused and accessible when the switch is installed, seal the back-access point with a locking compound to prevent tampering.

Installing the Escape Release Mechanism

An Escape Release Mechanism can be mounted on the back of the unit and used as an escape release device for an operator trapped inside the danger zone.

It is the responsibility of the user to ensure the mounting complies with the requirements of ISO 14119 or other appropriate standards. To attach the Escape Release Mechanism to the back of the switch:

© Banner Engineering Corp. All rights reserved.

1. Align the arrow of the release mechanism with the arrow on the back of the switch body.
2. Secure into place with the included mounting screws (torque to 0.5 N·m).

To unlock the actuator with the Escape Release Mechanism, turn the dial 180° clockwise. Remove the actuator.

To reset the Escape Release Mechanism, turn the dial 180° counterclockwise. The unit is now ready normal operation.

Access the Wiring Chamber

1. To access the wiring chamber, loosen the top cover's four screws (centered at top, bottom, and on each side) with a screwdriver (TX 10).

   The screws are captive screws and should not come all the way out of the cover.
2. Select the best wiring entrance and, if required, thread in the ½" x 14 NPT conduit adapter (**SI-QS-M20**, ordered separately) or an M20 × 1.5 cable gland (**SI-QS-CGM20**, ordered separately). For more information, see "Accessories" on page 23.
3. Tighten the conduit adapter or cable gland to 6 N·m.

   The switch knockout breaks loose with the final turns of the conduit adapter or cable gland.
4. Attach wires (see "Wiring the Terminals" on page 14).
5. Replace the cover and tighten the four screws to 0.8 Nm to 0.9 Nm.

Wiring the Terminals

The electrical contacts of the switching elements have screw connections. Use a flathead screwdriver to loosen and tighten the terminals.

See "Models" on page 3 for contact assignments. The connections require a stranded flexible wire with ferrule having a cross section of 0.34 mm^2 to 1.5 mm^2. Strip length should be between 6 mm and 7 mm. Tighten the screws to 0.8 N·m.

When using the locking mechanism for personal protection, use the contacts marked with . Because the locking element can only go to the engaged position if the actuator is present, this contact signifies the closed position and the locking status of the guard so it can be checked by the monitoring device of the safety circuit (per ISO 14119).

When using the locking mechanism for process control purposes (only the fact that the door is closed is used for personnel safety), the contacts marked with the  symbol can be used, which signals the status of the actuator (present or not).

For units with pre-installed M12 quick disconnect connections, please refer to the corresponding model addendum for pin assignments.

Connection to a Machine

Perform a risk assessment to determine the means of interfacing the switch(es) with the machine control circuit. Although Banner Engineering always recommends the highest level of safety in any application, it is the responsibility of the user to safely install, operator and maintain each safety system and comply with all relevant laws and regulations.

To ensure the highest level of reliability (e.g. Control Reliable or Category 4/PL e), we recommend wiring the safety contacts from two safety switches per interlocked guard in a dual-channel connection to a safety module, safety controller, or other safety related parts of the control system (see "Accessories" on page 23 for a list of safety evaluation devices from Banner Engineering) that comply with the required level of safety performance as shown.

© Banner Engineering Corp. All rights reserved.

Actuator safety contacts (circle with arrow symbol)

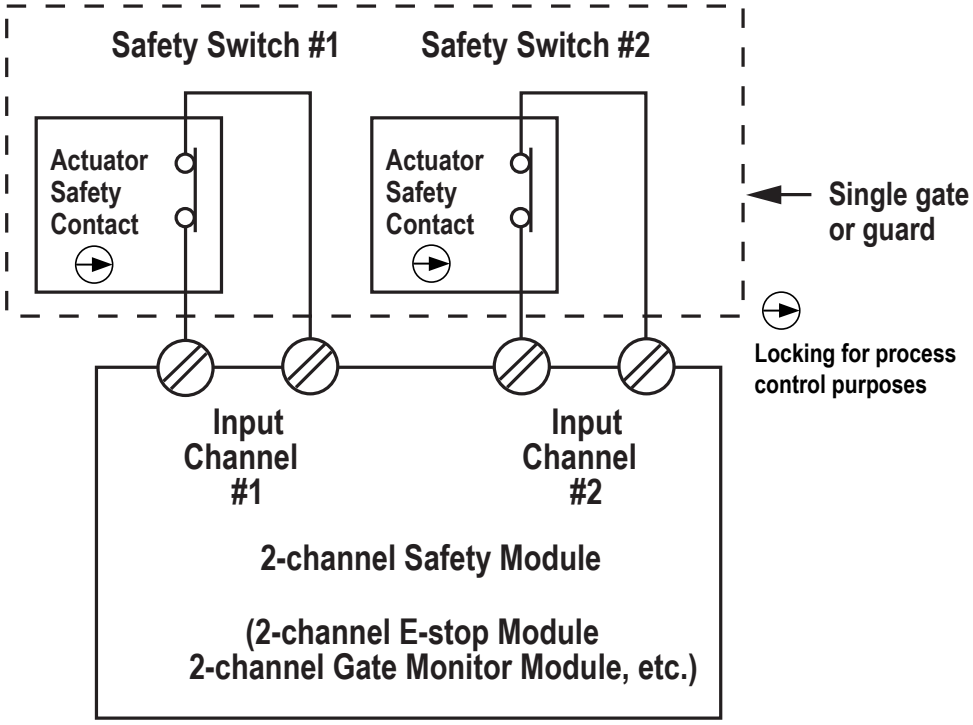

Solenoid monitor contacts (lock symbol)

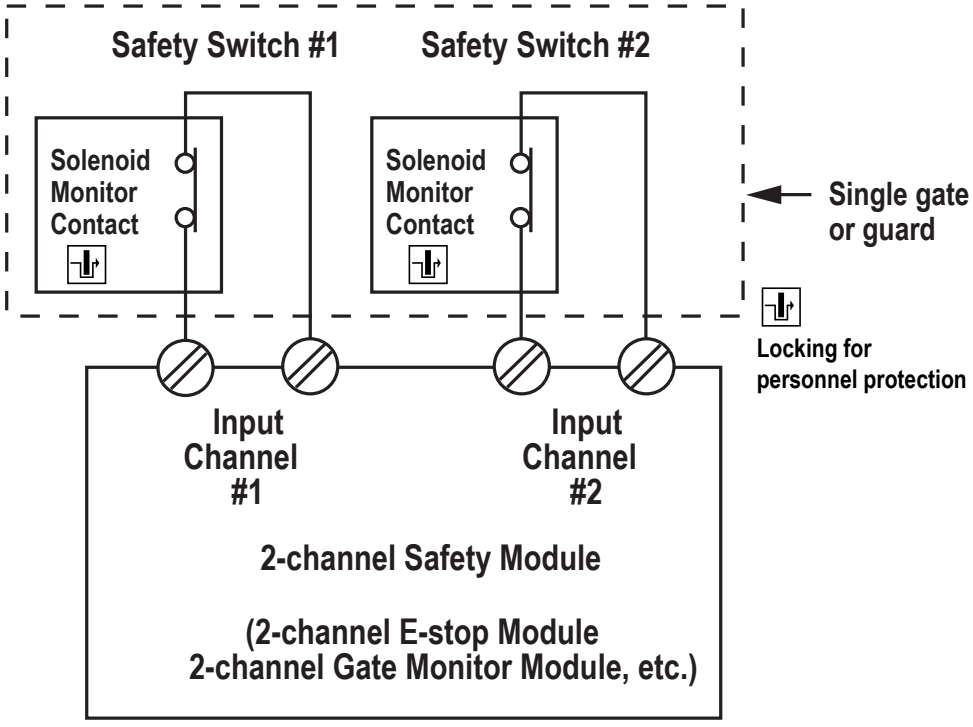

Refer to the installation instructions provided with the safety module for information about the interface of the safety module to the machine stop control elements (MSCE).

Two functions of the safety evaluation device are to provide:

© Banner Engineering Corp. All rights reserved.

- A means of Monitoring the contacts of both safety switches for contact failure and to prevent the machine from restarting if either switch fails.
- A reset routing after closing the guard and returning the safety contacts to their closed position. This prevents the controlled machinery from restarting by simply reinserting the safety switch actuators. This necessary reset function is required by ANSI B11.0 and NFPA 79 machine safety standards.

Use only positively-driven, normally-closed safety contacts (⊖ or ⊣) from each switch for connection to the safety module. The normally open contacts may be used for control functions that are not safety related. A typical use is to communicate with a process controller.

Solenoid voltage connects to terminals E1 (+) and E2 (-).

CAUTION:

- **Safety switch installation**
- Using only one safety switch per interlock guard is not recommended.
- Use two safety switches for each interlock guard to achieve control reliability or Safety Category 4 (per ISO 13849-1) of a machine stop circuit.
- In addition, normally-closed (N.C.) safety contacts from each of the two safety switches should be connected to the two separate inputs of a two-channel safety monitoring device. This is required to monitor for safety switch contact failure and to provide the necessary reset routine, as required by IEC 60204-1 and NFPA 79 machine safety standards.

WARNING:

- **Connecting safety switches in series**
- Monitoring multiple guards with a series connection of multiple safety interlock switches is not a Safety Category 4 Application (per ISO 13849-1). A single failure can be masked or not detected at all. The loss of a safety stop signal or an inappropriate reset can lead to serious injury or death.
- When such a configuration is used, procedures must be performed regularly to verify proper operation of each switch. Correct all failures immediately (for example, immediately replace a failed switch).

© Banner Engineering Corp. All rights reserved.

Chapter Contents

Checkout Procedures 17
Initial and Daily Checks 17
Periodic Checks 17

Chapter 3 Operating Instructions

Checkout Procedures

Banner Engineering highly recommends performing the System checkouts as described. However, a Qualified Person (or team) should evaluate these generic recommendations, considering their specific application, and determine the appropriate frequency of checkouts. This will generally be determined by a risk assessment, such as the one contained in ANSI B11.0. The result of the risk assessment will drive the frequency and content of the periodic checkout procedures and must be followed.

WARNING:

- **Test multiple safety devices individually**
- Failure to test each safety device individually could result in undetected faults and create an unsafe condition that could result in serious injury or death.
- When two or more safety devices are used, individually actuate each device, causing a stop or open-contact condition, then reset/rearm the safety module (if using manual reset mode). This allows the monitoring circuits to check each device and its wiring to detect faults.

Initial and Daily Checks

Verify the functioning of the safety switch(es) and the interlocked guard (if applicable) at designated periods. Verify at initial installation by a *qualified person*, verify daily or before each use by a *designated person*, and as part of the regular periodic checkout procedure listed below to ensure proper operation.

A *qualified person* possesses a recognized degree or certificate or has extensive knowledge, training, and experience to be able to solve problems relating to the safety switch installation. A *designated person* is identified in writing by the employer as being appropriately trained to perform a specified checkout procedure.

1. Inspect for breakage of the switch body or actuator
2. Verify good alignment and full engagement of the actuator
3. Confirmation that the safety switch is not being used as an end stop
4. Inspect for loosening, corrosion, or damage to the mounting hardware of the switch body and actuator
5. Verify that it is not possible to reach any hazard point through an opened guard (or any opening) before hazardous machine motion has completely stopped
6. Verify switch(es) operation per specific application. For example, the machine cycle stops and/or can not be initiated when the actuator is removed from the switch body.
7. If more than one safety switch(es) and the interlocked guard is used, perform this procedure individually for EACH device.

Periodic Checks

A *qualified person* (as defined above) should check for the following on a periodic schedule determined by the user, based upon the severity of the operating environment and the frequency of switch actuations. At a minimum, this should take place once a year (lockout/tagout procedures for controlling hazardous energy may be required):

1. Inspect the wiring chamber for signs of contamination, deterioration, loose connections, or damage
2. Inspect the sealing at the cable entry and all electrical wiring for continuity and damage

© Banner Engineering Corp. All rights reserved.

3. Verify that wiring and installation conforms to the instructions in this document and that there are no signs of tampering or defeat
4. Perform the initial/daily checkout listed above

See also the machine manufacturer's recommendations for additional instructions. If any of these checks cannot be verified, do not attempt to use the machine until the defect or problem has been corrected.

© Banner Engineering Corp. All rights reserved.

Chapter Contents

Dimensions 20

Chapter 4 Specifications

Electrical Protection Class

II, totally/double insulated

Solenoid

Duty Cycle: 100% ED (to E1/E2)

Temperature Class: F (155 °C)

Operating Voltage: 24 V AC/DC, -15% and +10%

Permanent Power Consumption: 24 V AC/DC; 6.7 VA (W)

Operating Cycles, permanent: 10/min

Switching Contacts

Direct/Positive Opening Action (⊖) per IEC 60947-5-1, Annex K

Short Circuit Protective Device: 4 A gG (2 A gG with M12 QD) (gG is a full range breaking capacity fast acting fuse)

Rated Conditional Short-Circuit Current: 400 A (400 A with m12 QD)

Construction

Enclosure and cover: Glass fiber-reinformed polyamide thermoplastic (UL94-V0)

Actuator head: Zinc die-cast with a nickel finish

Actuator: materials are listed below each actuator's dimension drawing

Maximum Approach Speed (V_{max})

0.5 m/s (19.7 in/s)

Switching Principle

Four slow-action contacts

Mechanical Life

1×10^6 switching cycles

$B10_d$

2×10^6 cycles at DC-13; 24 V; I_{e2} = 0.1 A

Connections

10 Screw terminals

0.34–1.5 mm^2 flexible (stranded) wire with ferrule (16 AWG max)

M20 × 1.5 threaded entrance (×3 ports)

Unlocked Extraction Force

≤ 10 N

Locked Holding Force (F_{Zh})

1500 N (337 lbf) (per ISO 14119)

Switching Contacts Contact Rating

Insulation voltage U_i: 250 V (30 V with M12 QD)

Impulse withstand voltage U_{imp}: 2.5 kV (0.8 kV with M12 QD)

Operating voltage U_e: 240 V AC/24 V AC/DC (24 V AC/DC with M12 QD)

Conventional thermal current I_{the}: 5 A (2 A with M12 QD)

Switching Contacts Use Category

Per IEC: AC-15, U_e/I_e 240 V/1.5 A

Per IEC: DC-13, U_e/I_e 24 V/1.5 A; 250 V/0.11 A (DC-13, U_e/I_e 24 V/1.5 A with M12 QD)

Per UL/CSA: B300/R300 (same polarity) (30 V/2 A general use with M12 QD)

Minimum Actuating Radius

SI-QM-SSA-2: 800 mm

SI-QM-SSA-2RA: 600 mm

SI-QM-SMFA-3: 400 mm

SI-QM-SMFA-2: 150 mm

Operating Conditions

Ambient Air Temperature: –25 °C to +55 °C (–13 °F to +131 °F)

Environmental Rating

IP67 (per EN IEC 60529)

Indoor use only Type 6 (per UL 50 E/CSA C22.2)

Applicable Standards

IEC 60947-5-1

UL 508 (18th edition), CSA=C22.2 No. 14-18

GS-ET-19 (DGUV)

EN ISO 14119

EN ISO 13849-1

Certifications

Banner Engineering BV
Park Lane, Culliganlaan 2F bus 3
1831 Diegem, BELGIUM

Turck Banner LTD Blenheim House
Blenheim Court
Wickford, Essex SS11 8YT
GREAT BRITAIN

© Banner Engineering Corp. All rights reserved.

Dimensions

All measurements are listed in millimeters, unless noted otherwise.

SI-GL42 dimensions

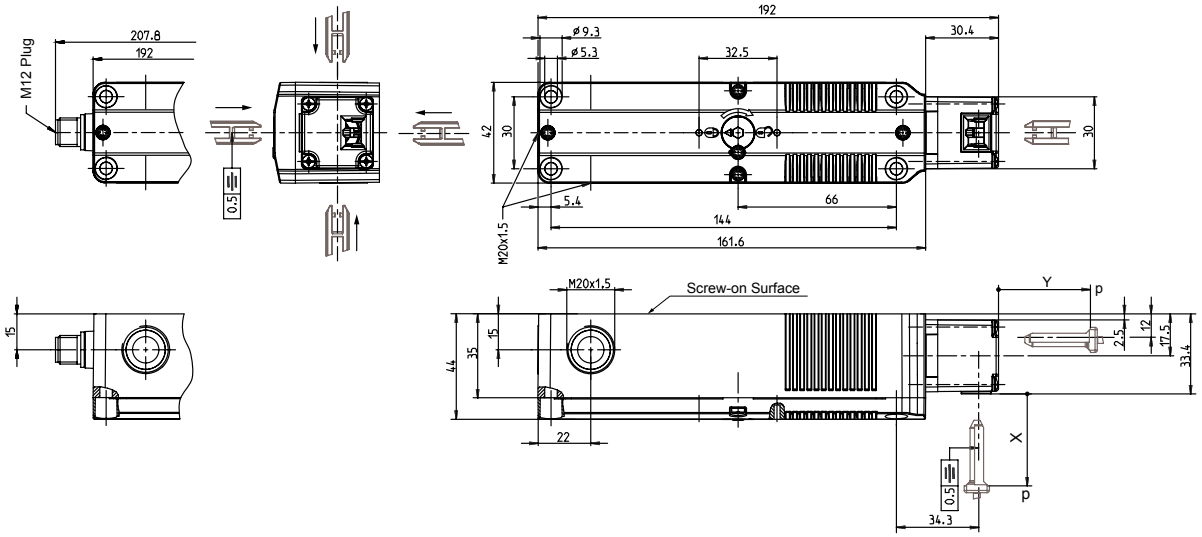

SI-QM-SMFA-2 dimensions

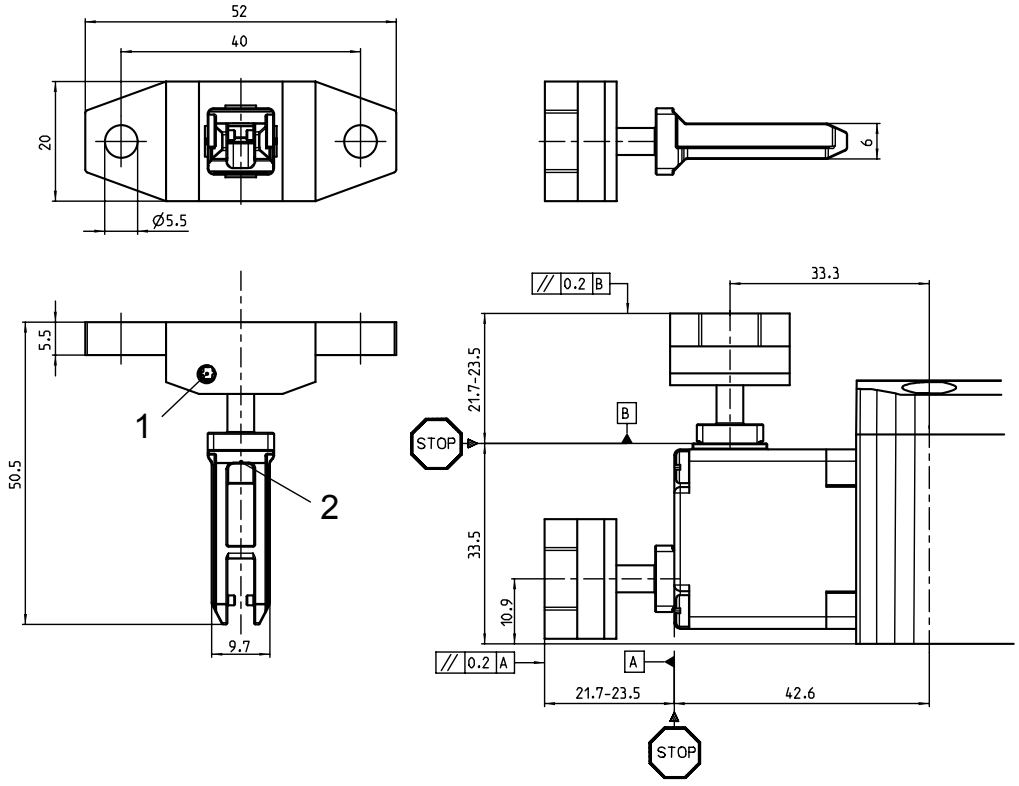

The actuator, enclosure, and clamping cams are all of stainless steel construction.

© Banner Engineering Corp. All rights reserved.

SI-QM-SMFA-3 dimensions

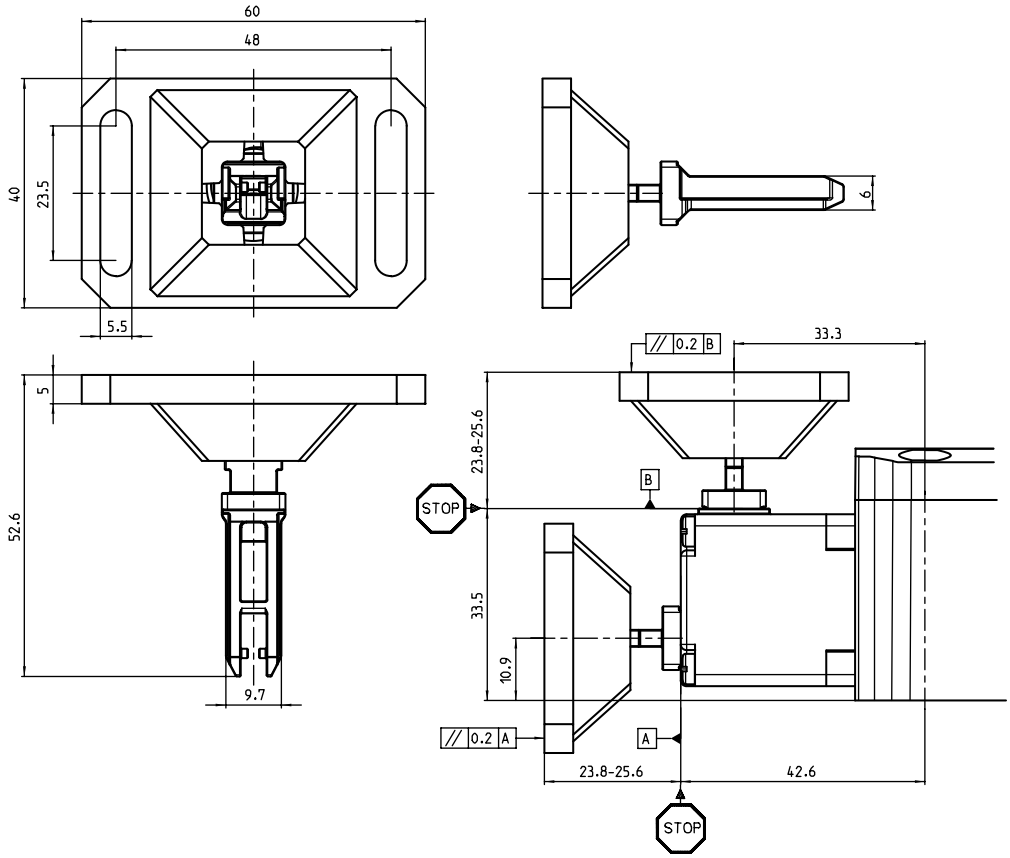

The actuator tongue is of stainless steel construction. The enclosure is of zinc die-cast construction.

SI-QM-SSA-2 dimensions

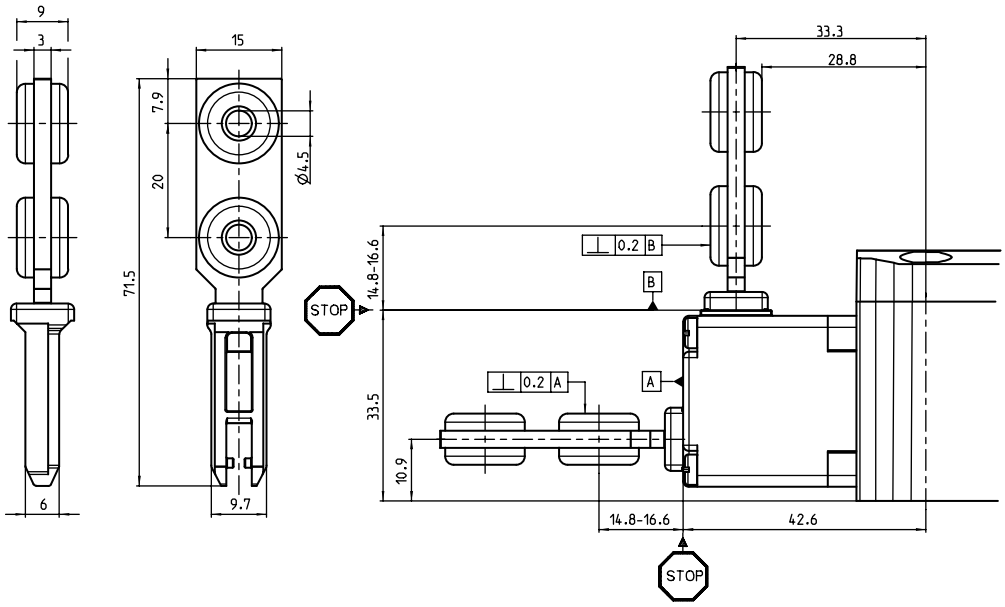

The actuator is of stainless steel construction with grommets of chloroprene construction and sockets of steel construction.

© Banner Engineering Corp. All rights reserved.

SI-QM-SSA-2RA dimensions

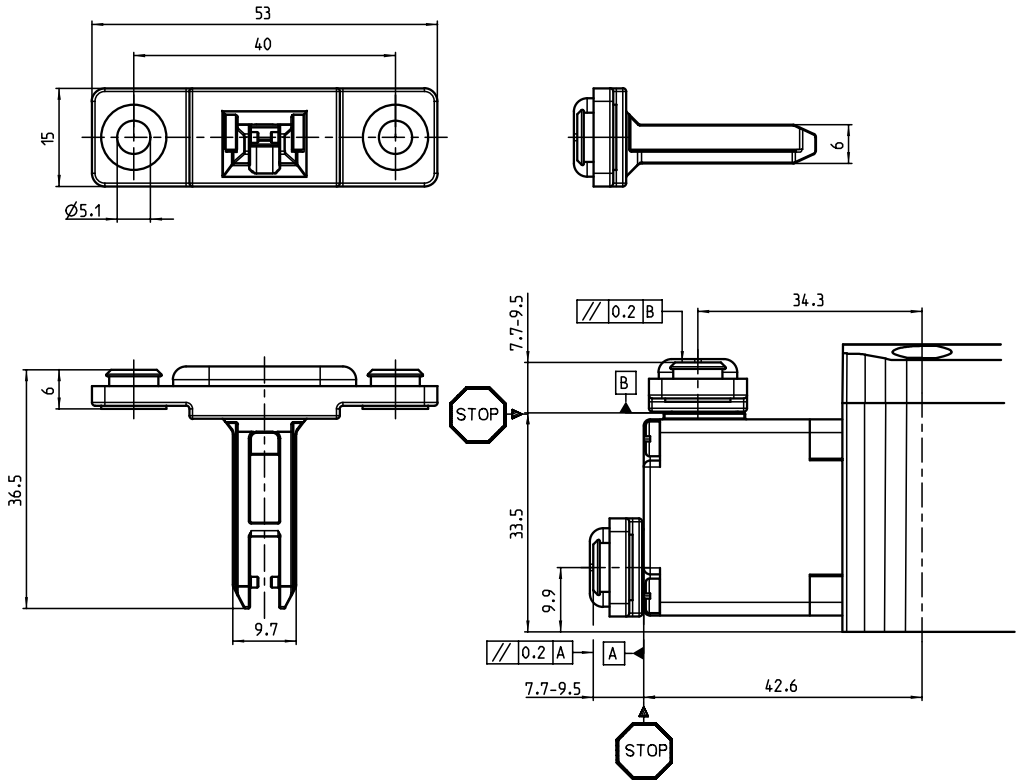

The actuator and sockets are of stainless steel construction while the foam is of polyurethane construction.

© Banner Engineering Corp. All rights reserved.

Chapter Contents

Actuators and Unlock Mechanisms 23
Plastic Conduit Adapter 23
Cable Glands 24
Universal (Input) Safety Modules 24
Safety Controllers 24

Chapter 5 Accessories

Actuators and Unlock Mechanisms

Model	Type	Description	Minimum Approach Radius
SI-QM-SSA-2	Actuator	Straight Actuator	800 mm
SI-QM-SSA-2RA		Rigid Flat Mount Actuator (90° mounting)	600 mm
SI-QM-SMFA-2		Fully Flexible Actuator	150 mm
SI-QM-SMFA-3		Slightly vertical/horizontal offset Actuator	400 mm
SI-GL42-ERS-F-1	Unlock Mechanism	Front Mount Emergency Release Lever	
SI-GL42-ERS-B-1		Back Mount Emergency Release Lever	
SI-GL42-ERBD-B-1		Back Mount Escape Release Mechanism	
SI-GL42-EM20-1		20 mm Extension for Escape Release Mechanism	
SI-GL42-EM40-1		40 mm Extension for Escape Release Mechanism	
SI-QM-SSA-SH	Sliding Handle Accessory	Sliding handle assembly	
SI-QM-SSA-SHER		Sliding handle assembly with escape release mechanisms	
SI-GL42-ERBD-SH-1		Escape release mechanism for sliding handle assembly	
SI-QM-SSA-SHER-ERH-1		Escape release handle for sliding handle assembly	

Plastic Conduit Adapter

Model	Size	Thread Conversion	Dimensions	Used With
SI-QS-M20	½ in-14 NPT Plastic	M20 × 1.5 to ½ in-14 NPT	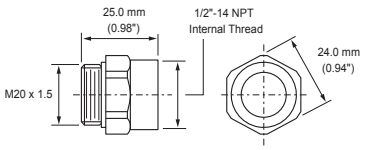	SI-GL42 Safety Interlock Switch SI-LS42 Safety Interlock Switch SI-LS100 Safety Interlock Switch SI-QS90 Safety Interlock Switch RP-LS42 Rope Pull Switch

© Banner Engineering Corp. All rights reserved.

Cable Glands

Model	Size	For Cable Diameter	Dimensions	Used With
SI-QS-CGM20	M20 × 1.5 Plastic	5.0 to 12.0 mm (0.20 to 0.47 inches)	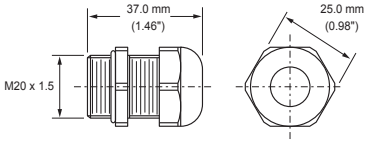	RP-LS42 Rope Pull Switch SI-GL42 Safety Interlock Switch SI-LS42 Safety Interlock Switch SI-LS100 Safety Interlock Switch SI-QS90 Safety Interlock Switch

Universal (Input) Safety Modules

Safety modules provide forced-guided, mechanically-linked relay (safety) outputs for the system when an external manual reset (latch) is desired or external device monitoring is required in the application.

See datasheet p/n 141249 or 60606 for more information.

Model	Description
UM-FA-9A	3 Normally Open (NO) Redundant-output 6 A Contacts
UM-FA-11A	2 Normally Open (NO) Redundant-output 7 A Contacts, plus 1 Normally Closed (NC) Auxiliary Contact
ES-FA-9AA	3 Normally Open (NO) Redundant-output 6 A Contacts
ES-FA-11AA	2 Normally Open (NO) Redundant-output 7 A Contacts, plus 1 Normally Closed (NC) Auxiliary Contact

Safety Controllers

Safety Controllers provide a fully configurable, software-based safety logic solution for monitoring safety and non-safety devices.

For additional models and XS26 expansion modules, see instruction manual p/n 174868.

Safety controller models

Non-Expandable Models	Expandable Models	Description
SC26-2	**XS26-2**	26 convertible I/O and 2 redundant solid-state safety outputs
SC26-2d	**XS26-2d**	26 convertible I/O and 2 redundant solid-state safety outputs with display
SC26-2e	**XS26-2e**	26 convertible I/O and 2 redundant solid-state safety outputs with Ethernet
SC26-2de	**XS26-2de**	26 convertible I/O and 2 redundant solid-state safety outputs with display and Ethernet
SC10-2roe		10 inputs, 2 redundant relay safety outputs (3 contacts each) (ISD and Ethernet compatible)
	XS26-ISDd	26 inputs, 2 redundant solid-state safety outputs with display, Ethernet, and 8 ISD channels

© Banner Engineering Corp. All rights reserved.

Chapter Contents

Repairs 25
EU/UK Declaration of Conformity (DoC) 25
Banner Engineering Corp Limited Warranty 25

Chapter 6 Product Support and Maintenance

Repairs

Do not attempt any repairs to the safety interlocking switch. It contains no field-replaceable components. Return it to Banner Engineering for warranty repair or replacement.

Contact Banner Factory Application Engineering. They will attempt to troubleshoot the system from your description of the problem. If they conclude that a component is defective, they will issue a return merchandise authorization (RMA) number for your paperwork, and give you the proper shipping address.

> **IMPORTANT:** Pack the safety switches carefully. **Damage that occurs in return shipping is not covered by warranty.**

EU/UK Declaration of Conformity (DoC)

Banner Engineering Corp. herewith declares that these products are in conformity with the provisions of the listed directives and all essential health and safety requirements have been met. For the complete DoC, please go to www.bannerengineering.com.

Product	Directive
SI-GL42 Series Locking-Style Safety Interlock Switch	EU: 2006/42/EC
	UKCA: Machinery (Safety) Regulations 2008

Representative in EU: Spiros Lachandidis, Managing Director, **Banner Engineering BV** Park Lane | Culliganlaan 2F bus 3 | 1831 Diegem, BELGIUM

Representative in UK: Tony Coghlan, Managing Director, **Turck Banner LTD** Blenheim House | Blenheim Court | Wickford, Essex SS11 8YT | Great Britain

Banner Engineering Corp Limited Warranty

Banner Engineering Corp. warrants its products to be free from defects in material and workmanship for one year following the date of shipment. Banner Engineering Corp. will repair or replace, free of charge, any product of its manufacture which, at the time it is returned to the factory, is found to have been defective during the warranty period. This warranty does not cover damage or liability for misuse, abuse, or the improper application or installation of the Banner product.

THIS LIMITED WARRANTY IS EXCLUSIVE AND IN LIEU OF ALL OTHER WARRANTIES WHETHER EXPRESS OR IMPLIED (INCLUDING, WITHOUT LIMITATION, ANY WARRANTY OF MERCHANTABILITY OR FITNESS FOR A PARTICULAR PURPOSE), AND WHETHER ARISING UNDER COURSE OF PERFORMANCE, COURSE OF DEALING OR TRADE USAGE.

This Warranty is exclusive and limited to repair or, at the discretion of Banner Engineering Corp., replacement. **IN NO EVENT SHALL BANNER ENGINEERING CORP. BE LIABLE TO BUYER OR ANY OTHER PERSON OR ENTITY FOR ANY EXTRA COSTS, EXPENSES, LOSSES, LOSS OF PROFITS, OR ANY INCIDENTAL, CONSEQUENTIAL OR SPECIAL DAMAGES RESULTING FROM ANY PRODUCT DEFECT OR FROM THE USE OR INABILITY TO USE THE PRODUCT, WHETHER ARISING IN CONTRACT OR WARRANTY, STATUTE, TORT, STRICT LIABILITY, NEGLIGENCE, OR OTHERWISE.**

Banner Engineering Corp. reserves the right to change, modify or improve the design of the product without assuming any obligations or liabilities relating to any product previously manufactured by Banner Engineering Corp. Any misuse, abuse, or improper application or installation of this product or use of the product for personal protection applications when the product is identified as not intended for such purposes will void the product warranty. Any modifications to this product without prior express approval by Banner Engineering Corp will void the product warranties. All specifications published in this document are subject to change; Banner reserves the right to modify product specifications or update documentation at any time. Specifications and product information in English supersede that which is provided in any other language. For the most recent version of any documentation, refer to: www.bannerengineering.com.

For patent information, see www.bannerengineering.com/patents.

© Banner Engineering Corp. All rights reserved.

Document title: SI-GL42 Series Locking-Style Safety Interlock Switch Instruction Manual
Part number: 220476
Revision: D
Original Instructions
© Banner Engineering Corp. All rights reserved.

© Banner Engineering Corp. All rights reserved.

LinkedIn

Twitter

Facebook



© 2024. All rights reserved.
www.bannerengineering.com