QS30EX-RX High-Power Opposed Mode Series Sensor

Original Instructions
p/n: 115011 Rev. K
19-Aug-25
© Banner Engineering Corp. All rights reserved. www.bannerengineering.com

ПРОМЭЛЕКТРОНИКА/ sales@prom-elec.com

Contents

Chapter 1 Features 3
Models 3
Overview 4
Specifications 4
FCC Part 15 Class A for Unintentional Radiators 5
Industry Canada ICES-003(A) 5
Performance Curves 6
Dimensions 6

Chapter 2 Configuration Instructions 7
Wiring Diagrams 7
Sensor Configuration 7
Sensor Alignment 7

Chapter 3 Accessories 8
Cordsets 8
Brackets 8

Chapter 4 Product Support and Maintenance 10
Repairs 10
Contact Us 10
Banner Engineering Corp Limited Warranty 10

© Banner Engineering Corp. All rights reserved. www.bannerengineering.com

Chapter Contents

Models 3
Overview 4
Specifications 4

Chapter 1 Features

High-power opposed-mode sensors



- Infrared beam with high excess gain — range of over 213 m (700 ft)
- Excellent noise immunity
- Excellent for applications where high sensing power is required due to long sensing range or contamination on lenses
- Excellent optical performance throughout the sensing range
- Easy two-frequency selection to help prevent crosstalk, see Application Note (See"QS30 HP Opposed Specifications" on page 4)
- Easy-to-read operating status indicators with a bargraph display
- Bipolar discrete outputs, PNP and NPN
- Light Operate and Dark Operate models are available
- Models available with 2 m or 9 m (6.5 ft or 30 ft) cable or quick-disconnect fitting
- Tough ABS housing is rated IEC IP67; NEMA 6P; QD models are washdown tested to DIN 40050-9 (IEC IP69K)
- Unique water/debris-shedding lens design reduces lens contamination; lens material survives impact, washdown, and cleaning chemicals
- Encapsulated electronics
- Compact housing — mounting versatility via popular 30 mm threaded barrel or side-mount

WARNING:

- **Do not use this device for personnel protection**
- Using this device for personnel protection could result in serious injury or death.
- This device does not include the self-checking redundant circuitry necessary to allow its use in personnel safety applications. A device failure or malfunction can cause either an energized (on) or de-energized (off) output condition.

Models

Model	Cable	Supply Voltage	Output Type
Emitters			
QS30EX	2 m (6.5 ft) 5-wire cable	10 V DC to 30 V DC	—
QS30EXQ	5-pin M12 QD		
Receivers			
QS30ARX	2 m (6.5 ft) 5-wire cable	10 V DC to 30 V DC	Bipolar NPN/PNP Light Operate
QS30ARXQ	5-pin M12 QD		
QS30RRX	2 m (6.5 ft) 5-wire cable		Bipolar NPN/PNP Dark Operate
QS30RRXQ	5-pin M12 QD		

© Banner Engineering Corp. All rights reserved.
www.bannerengineering.com

Standard 2 m (6.5 ft) cable models are listed. To order the 9 m (30 ft) cabled models, add the suffix **W/30** to the model number of any cabled sensor (for example, QS30EX W/30). A model with a QD connector requires a mating cable (see "QS30 HP Cordsets" on page 8).

Overview

Banner QS30 Series high-power opposed-mode sensors are extremely rugged, powerful, and leakproof. They are designed to withstand the most demanding industrial applications, including high-pressure washdown areas. They are powerful enough to burn through heavy fog, dust, and most types of industrial and process contamination.

The sensor's electronics are epoxy-encapsulated for maximum resistance to mechanical shock and vibration. The popular WORLD-BEAM-style housing provides multiple mounting configurations in a minimum of space.

The innovative circuitry used in these sensors provides the best EMI/RFI noise immunity of any non-synchronized emitter/receiver pair. For applications where optical crosstalk between multiple sensor pairs may be a problem, the sensors provide a choice between two frequencies (A and B). (Each emitter must be set to the same frequency as its receiver, see "Sensor Alignment" on page 7.)

Receiver and Emitter Indicators

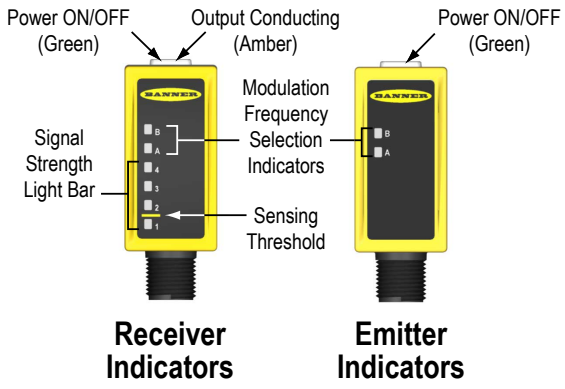

Light operate and dark operate outputs are available, depending on the model. Each model has two outputs that switch simultaneously: one each NPN (sinking) and PNP (sourcing).

In light operate (LO) mode, the output is ON when the target returns the same or more light to the sensor and OFF when the sensor detects less light than the configured/taught target. In dark operate (DO) mode, the output is ON when the target returns less light to the sensor than the configured target and OFF when the sensor detects more light than the configured/taught target. In **opposed** sensing modes, light operate means the output is on when the beam is unblocked and dark operate means the output is on when the beam is blocked.

Additional configuration options are available; contact Banner Engineering for information about the following options:

- Additional modulation frequency choices (up to four)
- Modified sensor gain
- ON-delay or OFF-delay settings
- Fixed modulation frequency models

Each sensor has a green Power ON/OFF indicator and amber indicators for the selected modulation frequency. In addition, receivers have an amber LED that lights when the outputs are conducting, plus a 4-element light bar that indicates signal strength, relative to the switch point (the higher the number lit, the more light is received).

Specifications

Supply Voltage and Current

Emitter: 10 V DC to 30 V DC (10% maximum ripple within specified limits); supply current (exclusive of load current): at less than 70 mA

Receiver: 10 V DC to 30 V DC (10% maximum ripple within specified limits); supply current (exclusive of load current): at less than 22 mA (exclusive of load)

Beam

Infrared, 875 nm

Sensing Range

Excess gain of 2 at 213 m (700 ft)

Output Configuration

Bipolar current sinking (NPN) white wire; current sourcing (PNP) black wire

Output Rating

100 mA max

OFF-state leakage current: less than 1 microamp @ 30 V DC

ON-state saturation voltage: less than 1 V @ 10 mA DC; less than 1.5 V @ 150 mA DC

Protected against false power-up and continuous overload or short circuit of outputs

Output Response Time

30 milliseconds ON and 30 milliseconds OFF; 5 ms repeatability

© Banner Engineering Corp. All rights reserved.

Adjustments

Light Operate/Dark Operate — dependent on model selected

Frequency via gray wire

A: Gray (+)
B: Gray (-)

Emitter only: LED inhibit via white wire White (-) turns emitter LED OFF (to allow verification of sensor operation)

Indicators

Green LED: Power ON

Frequency indicator (A or B)

Receiver only:

Two LEDs (Green and Amber) Output conducting

4-LED Signal Strength light bar

Environmental Rating

Cabled models: IP67, NEMA 6P

QD models: IP69K per ISO 20653 per DIN 40050-9

Construction

ABS plastic housing; COP plastic lens

Connection

5-wire cable (2 m or 9 m) or 5-pin integral M12 quick-disconnect fitting

Operating Conditions

–20 °C to +60 °C (–4 °F to +140 °F)

95% maximum relative humidity (non-condensing)

Mounting Torque

Maximum 4.5 N·m (40 lbf·in) with the included 30 mm mounting nut

Application Notes

1. When multiple sensors are used in close proximity (see Figure 2, Beam Width for guidance on separation distance), position the sensors so the alternate frequency emitter is not within the receiver's field of view. Contact the Banner Application team for additional information
2. Prolonged outdoor use in direct sunlight may cloud the lens. Contact Banner for other outdoor solutions
3. Conditions in outdoor environments, such as rain or fo,g can cause optical short circuits that result in a larger effective beam size

Certifications

Required Overcurrent Protection

WARNING: Electrical connections must be made by qualified personnel in accordance with local and national electrical codes and regulations.

Overcurrent protection is required to be provided by end product application per the supplied table.

Overcurrent protection may be provided with external fusing or via Current Limiting, Class 2 Power Supply.

Supply wiring leads < 24 AWG shall not be spliced.

For additional product support, go to www.bannerengineering.com.

Supply Wiring (AWG)	Required Overcurrent Protection (A)	Supply Wiring (AWG)	Required Overcurrent Protection (A)
20	5.0	26	1.0
22	3.0	28	0.8
24	2.0	30	0.5

FCC Part 15 Class A for Unintentional Radiators

This equipment has been tested and found to comply with the limits for a Class A digital device, pursuant to Part 15 of the FCC Rules. These limits are designed to provide reasonable protection against harmful interference when the equipment is operated in a commercial environment. This equipment generates, uses, and can radiate radio frequency energy and, if not installed and used in accordance with the instruction manual, may cause harmful interference to radio communications. Operation of this equipment in a residential area is likely to cause harmful interference in which case the user will be required to correct the interference at his own expense.

(Part 15.21) Any changes or modifications not expressly approved by the party responsible for compliance could void the user’s authority to operate this equipment.

Industry Canada ICES-003(A)

This device complies with CAN ICES-3 (A)/NMB-3(A). Operation is subject to the following two conditions: 1) This device may not cause harmful interference; and 2) This device must accept any interference received, including interference that may cause undesired operation.

Cet appareil est conforme à la norme NMB-3(A). Le fonctionnement est soumis aux deux conditions suivantes : (1) ce dispositif ne peut pas occasionner d'interférences, et (2) il doit tolérer toute interférence, y compris celles susceptibles de provoquer un fonctionnement non souhaité du dispositif.

© Banner Engineering Corp. All rights reserved.
www.bannerengineering.com

Performance Curves

Beam Pattern

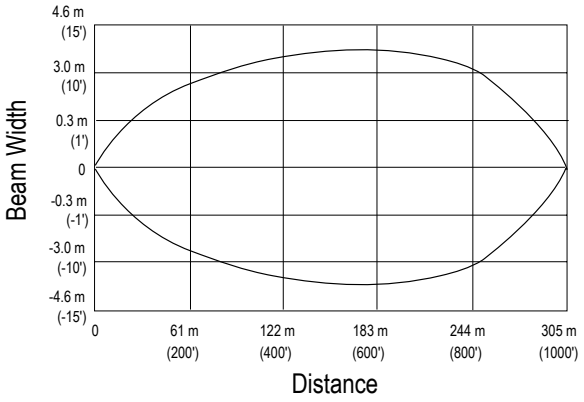

Excess Gain

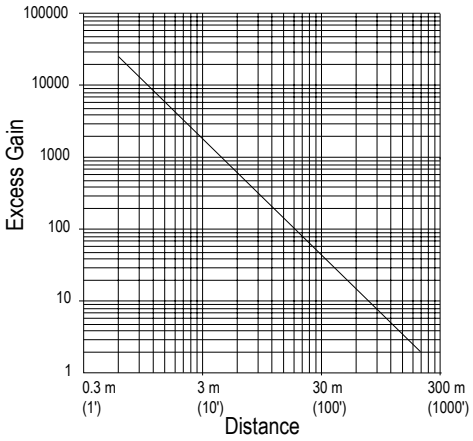

Effective Beam: 33 mm

Dimensions

Cabled Models

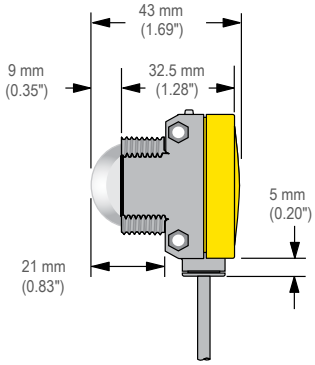

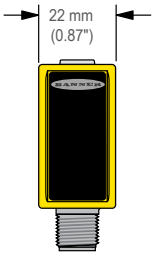

QD Models

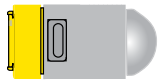

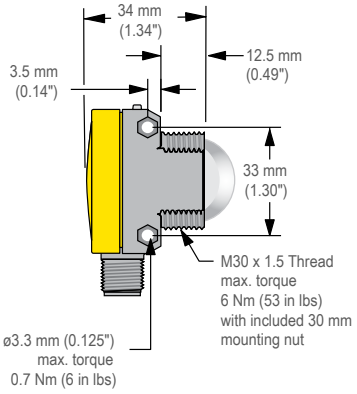

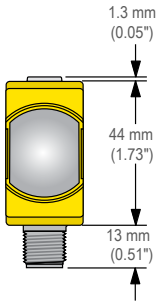

© Banner Engineering Corp. All rights reserved.
www.bannerengineering.com

Chapter Contents

Wiring Diagrams 7
Sensor Configuration 7
Sensor Alignment 7

Chapter 2 Configuration Instructions

Wiring Diagrams

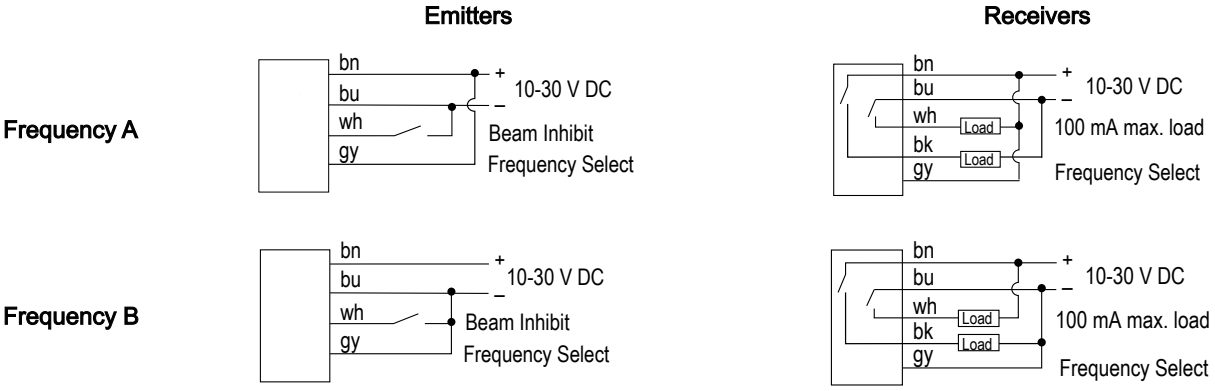

Sensor Configuration

The modulation frequency (A or B) is selected by the state of the gray wire (on cabled models; pin 5 on QD models – see "QS30EX Wiring Diagrams" on page 7). A “+” voltage or no connection selects frequency A; connecting it to “-” selects frequency B.

To disable (or inhibit) the emitter LED for testing the receiver, attach the white wire to “-” voltage.

Sensor Alignment

Adjust the emitter first, then the receiver.

1. Verify that both sensors are wired for the same modulation frequency, then adjust the emitter’s position until the receiver signal strength light bar indicates its highest amount of signal received (the highest number lit).
2. Tighten the emitter mounting hardware, then repeat the process for the receiver.
3. To achieve the best crosstalk immunity, position a single matched emitter within the receiver's field of view (15 degrees).
4. When it is necessary to position an alternate emitter in the receiver's field of view, sensor alignment is required to ensure the matched frequency emitter provides the stronger signal to its receiver, and the alternate frequency emitter does not reduce the signal strength of the receiver (as indicated by the 4-element signal strength light).

© Banner Engineering Corp. All rights reserved.
www.bannerengineering.com

Chapter Contents

Cordsets 8
Brackets 8

Chapter 3 Accessories

Cordsets

5-pin Single-Ended M12 Female Cordsets				
Model	**Length**	**Dimensions (mm)**	**Pinout (Female)**	
BC-M12F5-22-1	1 m (3.28 ft)	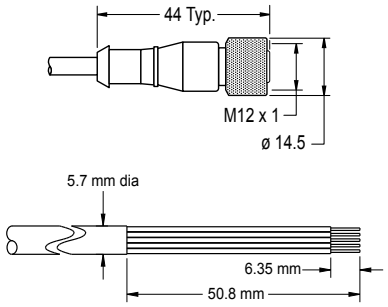	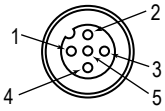	1 = Brown 2 = White 3 = Blue 4 = Black 5 = Gray
BC-M12F5-22-2	2 m (6.56 ft)			
BC-M12F5-22-5	5 m (16.4 ft)			
BC-M12F5-22-8	8 m (26.25 ft)			
BC-M12F5-22-10	10 m (30.81 ft)			
BC-M12F5-22-15	15 m (49.2 ft)			

5-pin Single-Ended M12 Female Right-Angle Cordsets				
Model	**Length**	**Dimensions (mm)**	**Pinout (Female)**	
BC-M12F5A-22-1	1 m (3.28 ft)	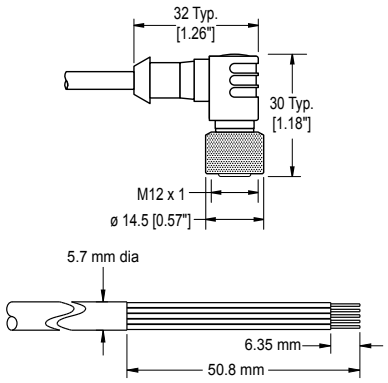	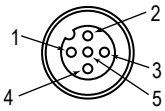	1 = Brown 2 = White 3 = Blue 4 = Black 5 = Gray
BC-M12F5A-22-2	2 m (6.56 ft)			
BC-M12F5A-22-5	5 m (16.4 ft)			
BC-M12F5A-22-8	8 m (26.25 ft)			
BC-M12F5A-22-10	10 m (30.81 ft)			
BC-M12F5A-22-15	15 m (49.2 ft)			

Brackets

SMBQS30L

- Right-angle bracket for cable sensor models
- Clearance for M4 (#8) hardware
- ± 12° tilt adjustment
- 14-gauge stainless steel

Hole center spacing: A to B=35.0
Hole size: A=ø 4.3, B=ø 4.25×16.3



© Banner Engineering Corp. All rights reserved.
www.bannerengineering.com

SMBQS30LT

- Tall right-angle bracket for QD models
- ± 8° tilt adjustment
- 14-gauge stainless steel

Hole center spacing: A to B=35.0
Hole size: A=ø 4.3, B=ø 4.25×16.3



SMBQS30Y

- Heavy-duty die-cast bracket
- M18 vertical mount option
- ± 8° tilt adjustment with cabled units
- Includes nuts and lock washer

Hole size: A=ø 15.3



SMB30SC

- Swivel bracket with 30 mm mounting hole for sensor
- Black reinforced thermoplastic polyester
- Stainless steel mounting and swivel locking hardware included

Hole center spacing: A=ø 50.8
Hole size: A=ø 7.0, B=ø 30.0

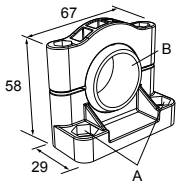

Other Compatible Mounting Brackets (see www.bannerengineering.com for more information) include:

- SMB30MM
- SMB30A

© Banner Engineering Corp. All rights reserved.
www.bannerengineering.com

Chapter Contents

Repairs 10
Contact Us 10
Banner Engineering Corp Limited Warranty 10

Chapter 4 Product Support and Maintenance

Repairs

Contact Banner Engineering for troubleshooting of this device. **Do not attempt any repairs to this Banner device; it contains no field-replaceable parts or components.** If the device, device part, or device component is determined to be defective by a Banner Applications Engineer, they will advise you of Banner's RMA (Return Merchandise Authorization) procedure.

> **IMPORTANT:** If instructed to return the device, pack it with care. Damage that occurs in return shipping is not covered by warranty.

Contact Us

Banner Engineering Corp. | 9714 Tenth Avenue North | Plymouth, MN 55441, USA | Phone: + 1 888 373 6767

For worldwide locations and local representatives, visit www.bannerengineering.com.

Banner Engineering Corp Limited Warranty

Banner Engineering Corp. warrants its products to be free from defects in material and workmanship for one year following the date of shipment. Banner Engineering Corp. will repair or replace, free of charge, any product of its manufacture which, at the time it is returned to the factory, is found to have been defective during the warranty period. This warranty does not cover damage or liability for misuse, abuse, or the improper application or installation of the Banner product.

THIS LIMITED WARRANTY IS EXCLUSIVE AND IN LIEU OF ALL OTHER WARRANTIES WHETHER EXPRESS OR IMPLIED (INCLUDING, WITHOUT LIMITATION, ANY WARRANTY OF MERCHANTABILITY OR FITNESS FOR A PARTICULAR PURPOSE), AND WHETHER ARISING UNDER COURSE OF PERFORMANCE, COURSE OF DEALING OR TRADE USAGE.

This Warranty is exclusive and limited to repair or, at the discretion of Banner Engineering Corp., replacement. **IN NO EVENT SHALL BANNER ENGINEERING CORP. BE LIABLE TO BUYER OR ANY OTHER PERSON OR ENTITY FOR ANY EXTRA COSTS, EXPENSES, LOSSES, LOSS OF PROFITS, OR ANY INCIDENTAL, CONSEQUENTIAL OR SPECIAL DAMAGES RESULTING FROM ANY PRODUCT DEFECT OR FROM THE USE OR INABILITY TO USE THE PRODUCT, WHETHER ARISING IN CONTRACT OR WARRANTY, STATUTE, TORT, STRICT LIABILITY, NEGLIGENCE, OR OTHERWISE.**

Banner Engineering Corp. reserves the right to change, modify or improve the design of the product without assuming any obligations or liabilities relating to any product previously manufactured by Banner Engineering Corp. Any misuse, abuse, or improper application or installation of this product or use of the product for personal protection applications when the product is identified as not intended for such purposes will void the product warranty. Any modifications to this product without prior express approval by Banner Engineering Corp will void the product warranties. All specifications published in this document are subject to change; Banner reserves the right to modify product specifications or update documentation at any time. Specifications and product information in English supersede that which is provided in any other language. For the most recent version of any documentation, refer to: www.bannerengineering.com.

For patent information, see www.bannerengineering.com/patents.

© Banner Engineering Corp. All rights reserved.
www.bannerengineering.com

LinkedIn

X (formerly Twitter)

Facebook



© 2025. All rights reserved.
www.bannerengineering.com