MODEL NO.	"L"	P/N
PIPS61.5UMSQMAP	457 [18]	51836
PIPS66UMSQMAP	2000 [79]	48063

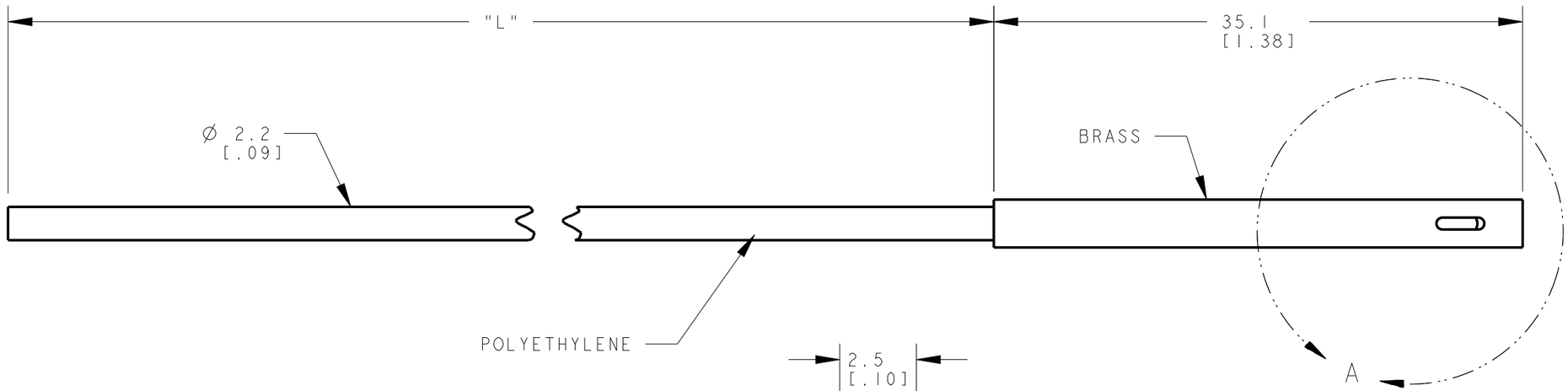

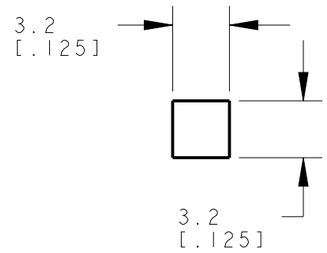

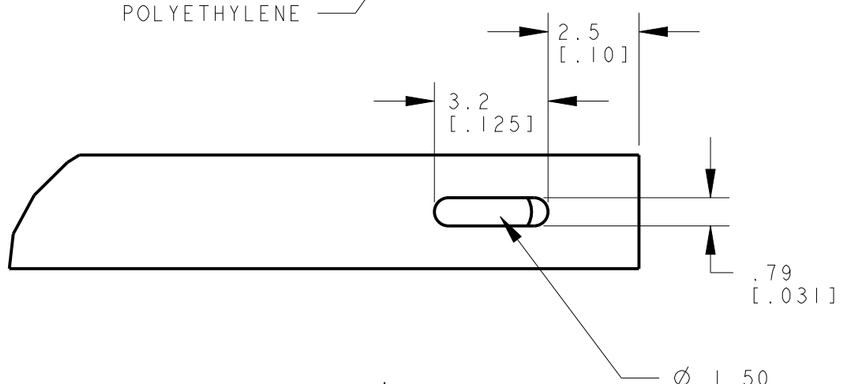

DETAIL A
SCALE 6:1

NOTES:
1. ALL DIMENSIONS ARE MILLIMETERS [INCHES] UNLESS OTHERWISE NOTED.
2. REFER TO "www.bannerengineering.com" FOR ADDITIONAL DATA AND SPECIFICATIONS.

This drawing is the property of BANNER ENGINEERING CORP. Any use or reproduction, in any form, without prior written permission of Banner is prohibited.
© 2015 Banner Engineering Corp.

THIRD ANGLE PROJECTION

BANNER ENGINEERING CORP.
www.bannerengineering.com

TITLE

PIPS6 SERIES UNTERMINATED SQUARE PROBE SIDE LOOKER

SIZE	DRAWING NO.	REV.
B	161933	A
SCALE 3:1	SHEET 1 OF 1	

CREO

ПРОМЭЛЕКТРОНИКА/ sales@prom-elec.com