# T30UX Series with Discrete Output

## Important Information

For complete technical information about this product, including installation instructions, application requirements and guidelines, technical specifications, and accessories, go to www.bannerengineering.com and search for the instruction manual, p/n 257922.

## Models

| Models | Range | Frequency | Cable | Discrete Output | Response Time |
|---|---|---|---|---|---|
| T30UXDA | 100 mm to 1 m (3.9 in to 39 in) | 224 kHz | Standard 2 m (6.5 ft) cable | NPN, PNP, NO, NC, Selectable | 45 ms |
| T30UXDAQ8 | | | 4-pin M12 integral QD | | |
| T30UXDAQPMA | | | 150 mm (6 in) PUR pigtail cable with 4-Pin threaded M12 QD | | |
| T30UXDB | 200 mm to 2 m (7.8 in to 78 in) | 174 kHz | Standard 2 m (6.5 ft) cable | | 92 ms |
| T30UXDBQ8QPMA | | | 4-pin M12 integral QD | | |
| T30UXDB | | | 150 mm (6 in) PUR pigtail cable with 4-Pin threaded M12 QD | | |
| T30UXDC | 300 mm to 3 m (11.8 in to 118 in) | 114 kHz | Standard 2 m (6.5 ft) cable | | 135 ms |
| T30UXDCQ8 | | | 4-pin M12 integral QD | | |
| T30UXDCQPMA | | | 150 mm (6 in) PUR pigtail cable with 4-Pin threaded M12 QD | | |

A model with a QD connector requires a mating cable.

## Specifications

**Sensing Range**

**"A" suffix models:** 100 mm to 1 m (3.9 in to 39 in)
**"B" suffix models:** 200 mm to 2 m (7.8 in to 78 in)
**"C" suffix models:** 300 mm to 3 m (11.8 in to 118 in)

**Ultrasonic Frequency**

**"A" suffix models:** 224 kHz
**"B" suffix models:** 174 kHz
**"C" suffix models:** 114 kHz

**Supply Voltage**

10 V DC to 30 V DC (10% maximum ripple) at 40 mA, exclusive of load

**Supply Protection Circuitry**

Protected against reverse polarity and transient voltages

**Output Configuration**

**Discrete (switched) output models:** SPST solid-state switch. Configurable as NPN (sinking) or PNP (sourcing) via Mode push button. Normally Open (NO) or Normally Closed (NC) operation is also selectable via Mode push button (see ).

The default setting is PNP/NO

**Output Rating**

**Discrete output models:** 100 mA max.
**OFF-state leakage current: NPN:** < 200 µA at 30 V DC (see NOTE 1); **PNP:** < 10 µA at 30 V DC
**ON-state saturation voltage: NPN:** < 1.6 V at 100 mA; **PNP:** < 3 V at 100 mA

**Sensing Hysteresis**

**"A" suffix models:** 2 mm
**"B" suffix models:** 3 mm
**"C" suffix models:** 4 mm

**Minimum Window Size**

10 mm (0.4 in)

**Adjustments**

**Sensing window limits:** TEACH-Mode of near and far window limits may be set using the push button or remotely via TEACH input.
**Output Configuration:** NPN, PNP, Normally Open (NO), Normally Closed (NC) select (see or ).
**Advanced configuration options:** Push button enabled/disabled, temperature compensation enabled/disabled (see )

**Environmental Rating**

Leakproof design, ratedIP67

**Connections**

2 m (6.5 ft) or 9 m (30 ft) shielded 4-conductor (with drain) PVC cable, 150 mm (6 in) PUR cable with an M12 connector (QPMA), or 4-pin integral M12 connector (Q8)

**Output Response Time**

**"A" suffix models:** 45 ms
**"B" suffix models:** 92 ms
**"C" suffix models:** 135 ms

**Output Protection Circuitry**

Protected against short circuit conditions

**Repeatability**

**"A" suffix models:** 0.1% of distance (0.5 mm min.)
**"B" suffix models:** 0.1% of distance (1.0 mm min.)
**"C" suffix models:** 0.1% of distance (1.5 mm min.)

**Application Note**

The temperature warmup drift upon power-up is less than 1% of the sensing distance.

**Temperature Effect**

0.02% of distance/°C

**Delay at Power-up**

500 ms

**Operating Conditions**

–40 °C to +70 °C (–40 °F to +158 °F)
95% at +50 °C maximum relative humidity (non-condensing)

**Required Overcurrent Protection**

**WARNING:** Electrical connections must be made by qualified personnel in accordance with local and national electrical codes and regulations.

Overcurrent protection is required to be provided by end product application per the supplied table.
Overcurrent protection may be provided with external fusing or via Current Limiting, Class 2 Power Supply.
Supply wiring leads < 24 AWG shall not be spliced.
For additional product support, go to www.bannerengineering.com.

| Supply Wiring (AWG) | Required Overcurrent Protection (A) | Supply Wiring (AWG) | Required Overcurrent Protection (A) |
|---|---|---|---|
| 20 | 5.0 | 26 | 1.0 |
| 22 | 3.0 | 28 | 0.8 |
| 24 | 2.0 | 30 | 0.5 |

**Certifications**

Banner Engineering BV
Park Lane, Culliganlaan 2F bus 3
1831 Diegem, BELGIUM

Turck Banner LTD Blenheim House
Blenheim Court
Wickford, Essex SS11 8YT
GREAT BRITAIN

**NOTE:** NPN < 200 µA for load impedance > 3 kΩ; for load current of 100 mA, leakage < 1% of load current

Original Instructions
18-Aug-26

© Banner Engineering Corp. All rights reserved.
www.bannerengineering.com

138381
p/n: 138381 Rev. J

ПРОМЭЛЕКТРОНИКА/ sales@prom-elec.com

## Dimensions

All measurements are listed in millimeters [inches], unless noted otherwise. The measurements provided are subject to change.

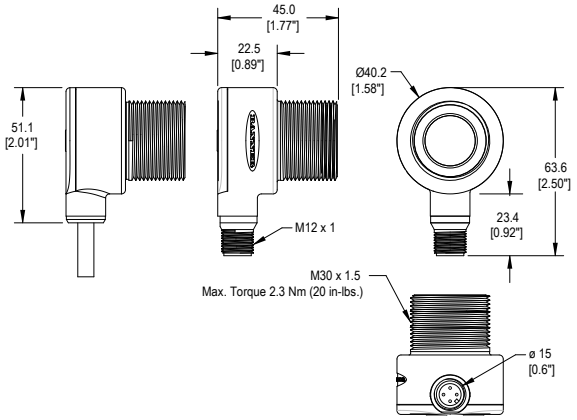


## Wiring

Cabled and quick disconnect (QD) connector wiring is functionally identical. Shielded cordsets are recommended for all QD models.

*NPN (sinking) output selected*

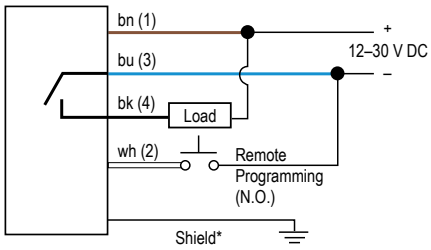


* It is recommended that the shield wire be connected to either earth ground or DC common.

*PNP (sourcing) output selected*

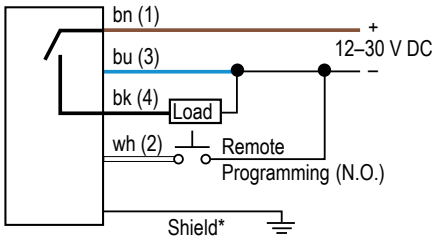


* It is recommended that the shield wire be connected to either earth ground or DC common.

*4-pin M12 male quick disconnect connector*

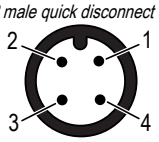


**Wiring Key**

1 = Brown
2 = White
3 = Blue
4 = Black

## Sensor Configuration

For detailed configuration instructions, see the T30UX with Discrete Output Product Manual.

Two TEACH methods may be used to configure the sensor:

- Teach individual minimum and maximum limits, or
- Use Auto-Window feature to center a sensing window around the taught position.

The sensor may be configured either via its push button, or via a remote switch. Remote configuration also may be used to disable the push button, preventing unauthorized personnel from adjusting the configuration settings. To access this feature, connect the white wire of the sensor to 0 V DC, with a remote configuration switch between the sensor and the voltage.

Configuration is accomplished by following the sequence of input pulses. The duration of each pulse (corresponding to a push button "click"), and the period between multiple pulses, are as "T": **0.04 seconds < T < 0.8 seconds**

Remote line configuration requires a greater than 1 second pause between pulse sequences.

## Contact Us

Banner Engineering Corp. | 9714 Tenth Avenue North | Plymouth, MN 55441, USA | Phone: + 1 888 373 6767

For worldwide locations and local representatives, visit www.bannerengineering.com.

## Banner Engineering Corp Limited Warranty

Banner Engineering Corp. warrants its products to be free from defects in material and workmanship for one year following the date of shipment. Banner Engineering Corp. will repair or replace, free of charge, any product of its manufacture which, at the time it is returned to the factory, is found to have been defective during the warranty period. This warranty does not cover damage or liability for misuse, abuse, or the improper application or installation of the Banner product.

**THIS LIMITED WARRANTY IS EXCLUSIVE AND IN LIEU OF ALL OTHER WARRANTIES WHETHER EXPRESS OR IMPLIED (INCLUDING, WITHOUT LIMITATION, ANY WARRANTY OF MERCHANTABILITY OR FITNESS FOR A PARTICULAR PURPOSE), AND WHETHER ARISING UNDER COURSE OF PERFORMANCE, COURSE OF DEALING OR TRADE USAGE.**

This Warranty is exclusive and limited to repair or, at the discretion of Banner Engineering Corp., replacement. **IN NO EVENT SHALL BANNER ENGINEERING CORP. BE LIABLE TO BUYER OR ANY OTHER PERSON OR ENTITY FOR ANY EXTRA COSTS, EXPENSES, LOSSES, LOSS OF PROFITS, OR ANY INCIDENTAL, CONSEQUENTIAL OR SPECIAL DAMAGES RESULTING FROM ANY PRODUCT DEFECT OR FROM THE USE OR INABILITY TO USE THE PRODUCT, WHETHER ARISING IN CONTRACT OR WARRANTY, STATUTE, TORT, STRICT LIABILITY, NEGLIGENCE, OR OTHERWISE.**

Banner Engineering Corp. reserves the right to change, modify or improve the design of the product without assuming any obligations or liabilities relating to any product previously manufactured by Banner Engineering Corp. Any misuse, abuse, or improper application or installation of this product or use of the product for personal protection applications when the product is identified as not intended for such purposes will void the product warranty. Any modifications to this product without prior express approval by Banner Engineering Corp will void the product warranties. All specifications published in this document are subject to change; Banner reserves the right to modify product specifications or update documentation at any time. Specifications and product information in English supersede that which is provided in any other language. For the most recent version of any documentation, refer to: www.bannerengineering.com.

For patent information, see www.bannerengineering.com/patents.


© Banner Engineering Corp. All rights reserved. www.bannerengineering.com