5-pin L-Code M12 Male to 5-pin L-Code M12 Female Splitters

Features

In-Line Model



Tee Model



- Split power to multiple devices
- Rugged overmolded design
- Both in-line and tee splitter bodies are available
- 5-pin L-Code M12 connections capable of carrying 16 A

Models

Model	Female Ports	Male Input Port	Wiring
R50-2M125L-M125-P	Two 5-pin L-code M12 female quick-disconnect connectors, oriented in-line	One 5-pin L-Code M12 male quick-disconnect connector	Parallel
R50T-2M125L-M125-P	Two 5-pin L-code M12 female quick-disconnect connectors, oriented in a tee		

Mechanical Installation

Install the splitter to allow access for functional checks, maintenance, and service or replacement.

All mounting hardware is supplied by the user. Fasteners must be of sufficient strength to guard against breakage. Use of permanent fasteners or locking hardware is recommended to prevent the loosening or displacement of the device. The mounting hole (4.5 mm) in the splitter accepts M4 (#8) hardware. See the figure below to help in determining the minimum screw length.

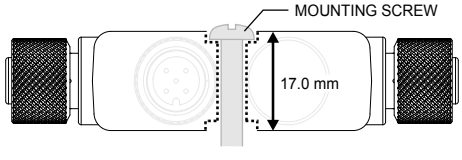

NOTE: The dotted line indicates the profile of the counterbore.

CAUTION: Do not overtighten the splitter's mounting screw during installation. Overtightening can affect the performance of the splitter.

Original Instructions
20-Oct-25

© Banner Engineering Corp. All rights reserved.
www.bannerengineering.com

244537
p/n: 244537 Rev. C

ПРОМЭЛЕКТРОНИКА/ sales@prom-elec.com

Wiring

In-Line Model

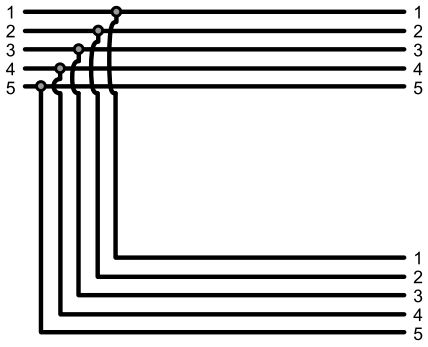

Tee Model

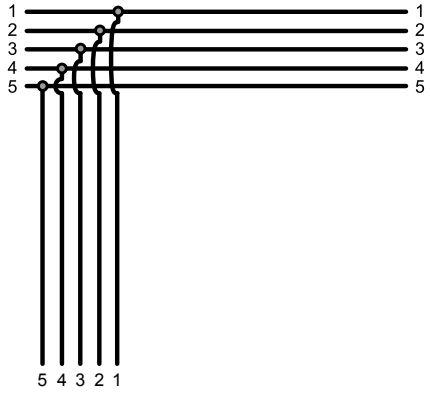

Specifications

Voltage Input Range
60 V DC

Maximum Current
16 A

Construction
Coupling Material: Nickel-plated brass
Housing Body: TPU black

Vibration and Mechanical Shock
Meets IEC 60068-2-6 requirements (Vibration: 10 Hz to 55 Hz, 0.5 mm amplitude, 5 minutes sweep, 30 minutes dwell)
Meets IEC 60068-2-27 requirements (Shock: 15G 11 ms duration, half sine wave)

Environmental Ratings
IP65, IP67, IP68

Operating Conditions
–40 °C to +70 °C (–40 °F to +158 °F)
90% at +70 °C maximum relative humidity (non-condensing)
Storage Temperature: –40 °C to +80 °C (–40 °F to +176 °F)

Certifications

Banner Engineering BV
Park Lane, Culliganlaan 2F bus 3
1831 Diegem, BELGIUM

Dimensions

All measurements are listed in millimeters [inches], unless noted otherwise. The measurements provided are subject to change.

In-Line Model

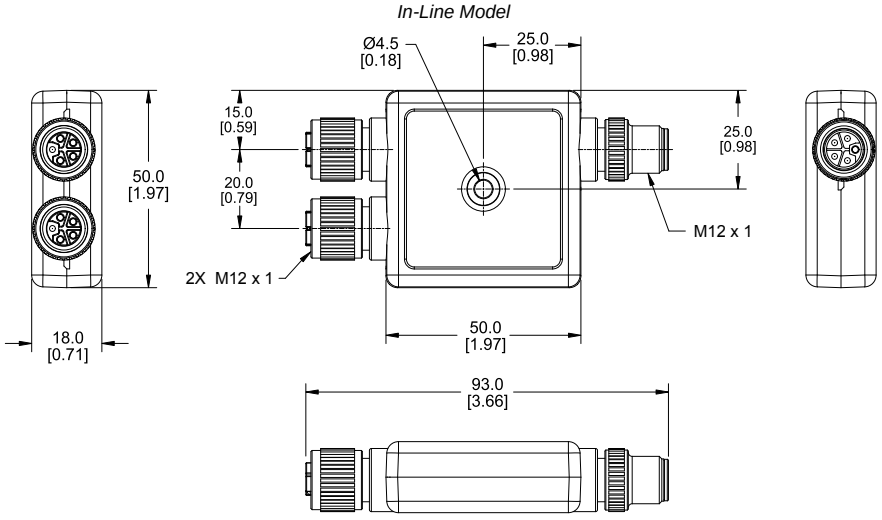

© Banner Engineering Corp. All rights reserved.
www.bannerengineering.com

Tee Model

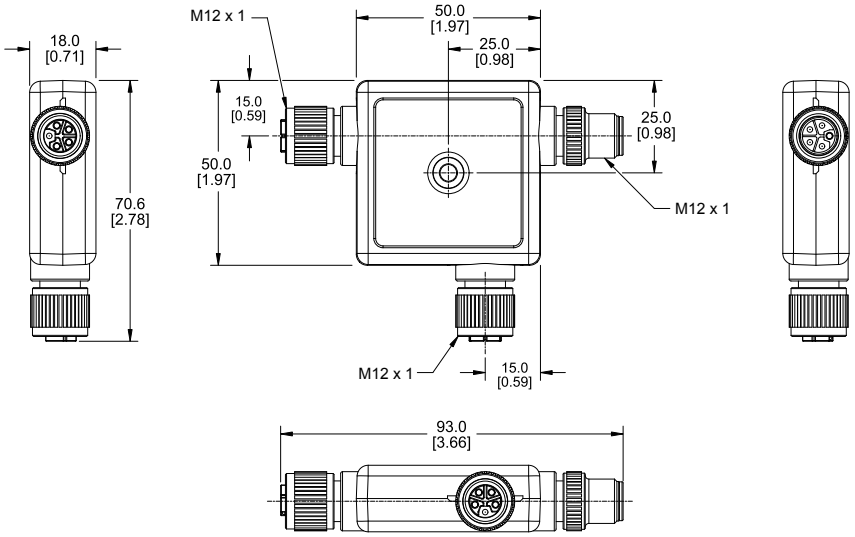

Accessories

Cordsets

5-pin L-Code Single-Ended M12 Female Cordsets				
Model	**Length**	**Dimensions (mm)**	**Pinout (Female)**	
BCP-M12LF5-14-1	1 m (3.28 ft)	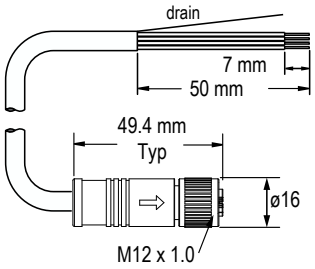	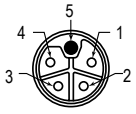	1 = Brown 2 = White 3 = Blue 4 = Black 5 = Yellow/Green Shell = Braid
BCP-M12LF5-14-2	2 m (6.56 ft)			
BCP-M12LF5-14-5	5 m (16.4 ft)			
BCP-M12LF5-14-10	10 m (32.8 ft)			
BCP-M12LF5-14-15	15 m (49.2 ft)			
BCP-M12LF5-14-20	20 m (65.6 ft)			

5-pin L-Code Single-Ended M12 Male Cordsets				
Model	**Length**	**Dimensions (mm)**	**Pinout (Male)**	
BCP-M12LM5-14-1	1 m (3.28 ft)	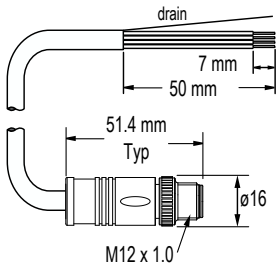	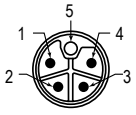	1 = Brown 2 = White 3 = Blue 4 = Black 5 = Yellow/Green Shell = Braid
BCP-M12LM5-14-2	2 m (6.56 ft)			
BCP-M12LM5-14-5	5 m (16.4 ft)			
BCP-M12LM5-14-10	10 m (32.8 ft)			
BCP-M12LM5-14-15	15 m (49.2 ft)			
BCP-M12LM5-14-20	20 m (65.6 ft)			

© Banner Engineering Corp. All rights reserved.
www.bannerengineering.com

5-pin L-Code Double-Ended M12 Female to M12 Male Cordsets				
Model	**Length**	**Dimensions (mm)**	**Pinout (Female)**	**Pinout (Male)**
BCP-M12LF5-M12LM5-14-1	1 m (3.28 ft)	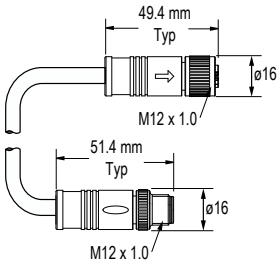	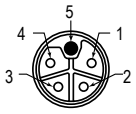 1 = Brown 2 = White 3 = Blue 4 = Black 5 = Yellow/Green Shell = Braid	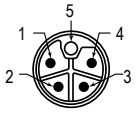 1 = Brown 2 = White 3 = Blue 4 = Black 5 = Yellow/Green Shell = Braid
BCP-M12LF5-M12LM5-14-2	2 m (6.56 ft)			
BCP-M12LF5-M12LM5-14-5	5 m (16.4 ft)			
BCP-M12LF5-M12LM5-14-10	10 m (32.8 ft)			
BCP-M12LF5-M12LM5-14-15	15 m (49.2 ft)			
BCP-M12LF5-M12LM5-14-20	20 m (65.6 ft)			

Maintenance and Service

Do not use alcohol-based cleaning agents. The splitter is maintenance-free.

Banner Engineering Corp Limited Warranty

Banner Engineering Corp. warrants its products to be free from defects in material and workmanship for one year following the date of shipment. Banner Engineering Corp. will repair or replace, free of charge, any product of its manufacture which, at the time it is returned to the factory, is found to have been defective during the warranty period. This warranty does not cover damage or liability for misuse, abuse, or the improper application or installation of the Banner product.

THIS LIMITED WARRANTY IS EXCLUSIVE AND IN LIEU OF ALL OTHER WARRANTIES WHETHER EXPRESS OR IMPLIED (INCLUDING, WITHOUT LIMITATION, ANY WARRANTY OF MERCHANTABILITY OR FITNESS FOR A PARTICULAR PURPOSE), AND WHETHER ARISING UNDER COURSE OF PERFORMANCE, COURSE OF DEALING OR TRADE USAGE.

This Warranty is exclusive and limited to repair or, at the discretion of Banner Engineering Corp., replacement. **IN NO EVENT SHALL BANNER ENGINEERING CORP. BE LIABLE TO BUYER OR ANY OTHER PERSON OR ENTITY FOR ANY EXTRA COSTS, EXPENSES, LOSSES, LOSS OF PROFITS, OR ANY INCIDENTAL, CONSEQUENTIAL OR SPECIAL DAMAGES RESULTING FROM ANY PRODUCT DEFECT OR FROM THE USE OR INABILITY TO USE THE PRODUCT, WHETHER ARISING IN CONTRACT OR WARRANTY, STATUTE, TORT, STRICT LIABILITY, NEGLIGENCE, OR OTHERWISE.**

Banner Engineering Corp. reserves the right to change, modify or improve the design of the product without assuming any obligations or liabilities relating to any product previously manufactured by Banner Engineering Corp. Any misuse, abuse, or improper application or installation of this product or use of the product for personal protection applications when the product is identified as not intended for such purposes will void the product warranty. Any modifications to this product without prior express approval by Banner Engineering Corp will void the product warranties. All specifications published in this document are subject to change; Banner reserves the right to modify product specifications or update documentation at any time. Specifications and product information in English supersede that which is provided in any other language. For the most recent version of any documentation, refer to: www.bannerengineering.com.

For patent information, see www.bannerengineering.com/patents.

© Banner Engineering Corp. All rights reserved.
www.bannerengineering.com