Mechanically Linked Contactors

Features

Provide additional 10 amp or 18 amp carrying capability to any safety system

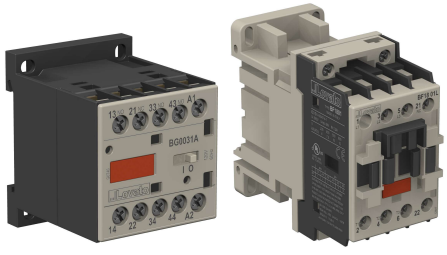

- For use with a safety device (for example, a safety light screen or safety module/controller) which has solid state or hard contact outputs
- Provides three normally open safety contacts and one normally closed monitoring contact for any safety system
- Auxiliary contact blocks, either three or four normally open depending on the model, are available
- 24 V DC or 120 V AC coil voltage, depending on model
- 10 amp or 18 amp contact rating
- Generally used in pairs for safety function; normally closed contacts used for the monitoring function of a safety system (for example, External Device Monitoring EDM)
- Standard DIN rail or flush-mounting
- BF series has built-in surge suppressor on coil

Models

Model	Coil Voltage[1]	Safety Contacts	Monitoring Contacts	Contact Rating
11-BG00-31-A12060	120 V AC	Three normally open	One normally closed	10 amps (thermal)
11-BG00-31-D024	24 V DC			
BF1801A-12060	120 V AC			18 amps[2] (inductive)
BF1801L-024	24 V DC			

Overview

Contactors can take many forms, thought the most common in a safety circuit are forced-guided, mechanically linked relays. The mechanical linkage between the contacts allows the device to be monitored by an external monitoring circuit for certain failures.

Depending on the application, the use of contactors can facilitate controlling voltage and current that differs from the output signal switching device (OSSD) outputs of the safety devices. Contacts can also be used to control an additional number of hazards by creating multiple safety stop circuits.

WARNING:
- **Not a stand-alone point-of-operation guarding device**
- This Banner Engineering Corp. device is not a stand-alone point-of-operation guarding device, as defined by OSHA regulations. Failure to install point-of-operation guards on hazardous machinery can result in a dangerous condition that could lead to serious injury or death.
- Install point-of-operation guarding devices, such as safety light curtains and/or hard guards, to protect personnel from hazardous machinery.

Important... Read this before proceeding!

The user is responsible for satisfying all local, state, and national laws, rules, codes, and regulations relating to the use of this product and its application. Banner Engineering Corp. has made every effort to provide complete application, installation, operation, and maintenance instructions. Please contact a Banner Applications Engineer with any questions regarding this product.

The user is responsible for making sure that all machine operators, maintenance personnel, electricians, and supervisors are thoroughly familiar with and understand all instructions regarding the installation, maintenance, and use of this product, and with the machinery it controls. The user and any personnel involved with the installation and use of this product must be thoroughly familiar with all applicable standards, some of which are listed within the specifications. Banner Engineering Corp. makes no claim regarding a specific recommendation of any organization, the accuracy or effectiveness of any information provided, or the appropriateness of the provided information for a specific application.

WARNING:
- **Not a safeguarding device**
- Failure to follow these instructions could result in serious injury or death.
- This device is not considered a safeguarding device because it requires an overt action by an individual to stop machine motion or hazards. A safeguarding device limits or eliminates an individual's exposure to a hazard without action by the individual or others. This device cannot be substituted for required safeguarding. Refer to the applicable standards to determine those requirements.

Applicable US Standards

ANSI B11 Standards for Machine Tools Safety

NFPA 79 Electrical Standard for Industrial Machinery

ANSI/RIA R15.06 Safety Requirements for Industrial Robots and Robot Systems

Applicable International Standards

ISO 12100 Safety of Machinery – General Principles for Design – Risk Assessment and Risk Reduction

EN 60204-1 Electrical Equipment of Machines Part 1: General Requirements

---

[1] One Arc Suppressor is needed for each BG Series relay across the coil (see "Suppressors for Mechanically Linked Contactors" on page 4).
[2] NC contact is rated at 10 amps.

Original Instructions
17-Apr-25

© Banner Engineering Corp. All rights reserved.
www.bannerengineering.com

111881
p/n: 111881 Rev. C

ПРОМЭЛЕКТРОНИКА/ sales@prom-elec.com

ISO 13849-1 Safety of Machinery – Safety-Related Parts of Control Systems – Part 1: General Principles for Design

ISO 13856-1 (EN1760-1), Safety of Machinery – Pressure-Sensitive Protective Devices

Specifications

Supply Voltage and Current

11-BG00-31-D024 and **BF1801L-024**: 24 V DC

11-BG00-31-A12060 and **BF1801A-12060**: 120 V AC

Operational Voltage Limits:

Pick-up: (0.8-1.1) x Us

Drop-out: (0.1-0.4) x Us

Average Coil Consumption at 20 °C

	11-BG00-31-D024	BF1801L-024
In-Rush	3.2 W	2.4 W
60 Hz Holding		

Output Configuration

Number of NO Contacts: 3

Number of NC Contacts: 1

Output Ratings

Max. Voltage: 690 V

Max. Current:

11-BG Series: 10 A (resistive)

BF Series: 18 A (≤ 440 V; 55 °C)

Mechanical Life

20,000,000 operations

Conventional Free Air Thermal Current Ith (≤ 40° C)

11-BG Series: 10 A

BF Series: 25 A

Rated Insulation Voltage (Ui)

690 V

B10d according to ISO 13849-1

Rated Load 1,600,000 cycles

Frequency Limit

25 Hz to 40 Hz (derating for use at 61 Hz to 400 Hz)

Terminal Tightening Torque Min./Max.

0.8 Nm to 1 Nm (0.59 lb/ft to 0.74 lb/ft) for coil terminals

1.5 Nm to 1.8 Nm (1.1 lb/ft to 1.3 lb/ft) for contact terminals

Max. Wire Gauge (for One or Two Wires)

18 AWG to 12 AWG

Flexible without Ferrule: 0.75 mm² to 2.5 mm²

Flexible with Ferrule: 2 x 1 mm² or 1 x 2.5 mm²

Output Response Time (ms)

	11-BG00-31-D024	BF1801L-024	11-BG00-31-A12060	BF1801A-12060
Closing NO	18-25	42-58	12-21	8-24
Opening NO	2-3	7-13	9-18	10-20
Closing NC	3-5	11-17	17-26	17-30
Opening NC	11-17	32-42	7-17	7-18

Environmental Rating

NEMA 1, IP20

Contactors must be installed inside an enclosure rated NEMA 3 (IP54) or better

Mounting

Mounts to standard 35 mm DIN-rail track or flush mount (4 screws)

Operating Conditions

Operating Temperature: –40 °C to +60 °C (–40 °F to +140 °F)

Storage Temperature: –55 °C to +70 °C (–67 °F to +158 °F)

Maximum relative humidity: 90% at +50 °C maximum relative humidity (non-condensing)

Application Notes

There are no adjustments and no user-serviceable parts

Required Overcurrent Protection

WARNING: Electrical connections must be made by qualified personnel in accordance with local and national electrical codes and regulations.

Overcurrent protection is required to be provided by end product application per the supplied table.

Overcurrent protection may be provided with external fusing or via Current Limiting, Class 2 Power Supply.

Supply wiring leads < 24 AWG shall not be spliced.

For additional product support, go to www.bannerengineering.com.

Supply Wiring (AWG)	Required Overcurrent Protection (A)	Supply Wiring (AWG)	Required Overcurrent Protection (A)
20	5.0	26	1.0
22	3.0	28	0.8
24	1.0	30	0.5

Certifications

Banner Engineering BV
Park Lane, Culliganlaan 2F bus 3
1831 Diegem, BELGIUM

c UL us LISTED 48D6 IND. COMT. EQ.

Dimensions

All measurements are listed in millimeters [inches], unless noted otherwise. The measurements provided are subject to change.

11-BG Series

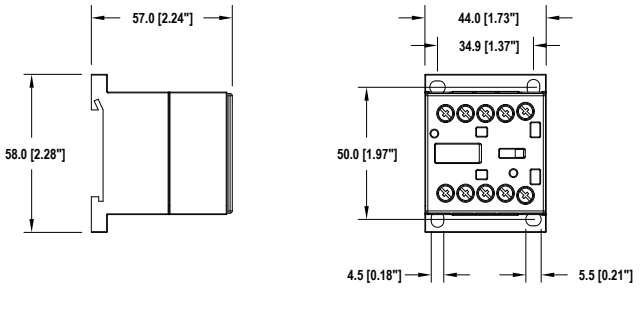

BF Series

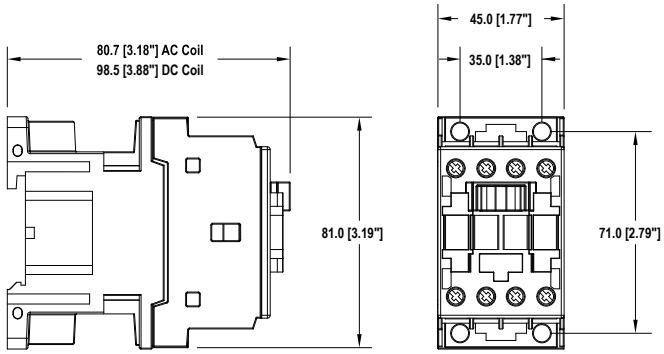

Mechanical Installation

Flush-mount (clearance for user-supplied M3 hardware) or mount to 35 mm DIN rail. The contactor must be mounted inside an enclosure rated NEMA 3, IEC IP54, or better.

Electrical Installation

As the contactors can interface to a multitude of machine control configurations, it is not possible to give exact wiring instructions for the output contacts. The following guidelines are general in nature.

Installation and wiring must be made by qualified personnel and must comply with the NEC (National Electrical Code), NFPA79 or IEC 60204-1, and all applicable local standards and codes.

© Banner Engineering Corp. All rights reserved. www.bannerengineering.com

WARNING:

- **Risk of electric shock**
- Use extreme caution to avoid electrical shock. Serious injury or death could result.
- Always disconnect power from the safety system (for example, device, module, interfacing, etc.), guarded machine, and/or the machine being controlled before making any connections or replacing any component. Lockout/tagout procedures might be required. Refer to OSHA 29CFR1910.147, ANSI Z244-1, or the applicable standard for controlling hazardous energy.
- Make no more connections to the device or system than are described in this manual. Electrical installation and wiring must be made by a Qualified Person[3] and must comply with the applicable electrical standards and wiring codes, such as the NEC (National Electrical Code), NFPA 79, or IEC 60204-1, and all applicable local standards and codes.

Since the contactors can switch high levels of energy, the user must consider and prevent the possibility of arc flash hazards. Arc flash can release dangerous amounts of heat and blast energy. When using low-voltage equipment (240 V or less) being fed by small transformers (125 kVA or less) the potential hazard is small, but the risk increases with higher voltage or larger transformers. The contactors may be required to be located in such a manner that minimizes arc flash hazards. Refer to NFPA70E for more information.

NOTE: Placing a surge suppressor on the coil of a contactor reduces the make and break surge current, which reduces the arc of the contact controlling the coil.

To satisfy the requirements of Category 3 or 4 of ISO 13849-1 and Control Reliability (OSHA/ANSI), one normally closed mechanically linked (forced guided) contact from each contactor must be monitored by the External Device Monitoring (EDM) function of the safety device. When redundant contactors are used, this will enable the detection of a failure, such as a welded contact, and prevent successive machine cycles. **It is the user's responsibility to monitor the contactors' normally closed contacts, to ensure that any single failure will not result in a hazardous condition and will prevent a successive machine cycle.**

11-BG Series

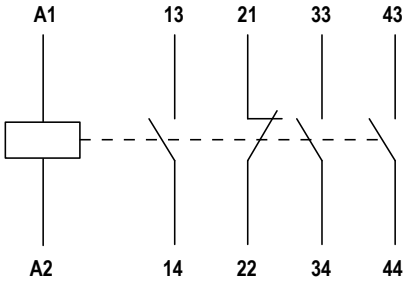

BF Series

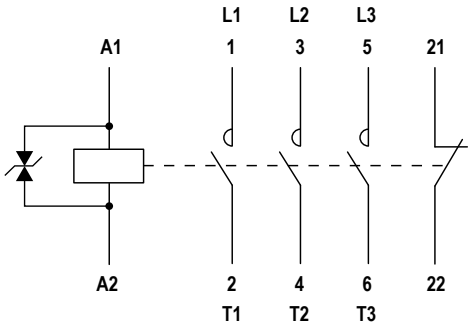

Terminal Wiring Diagrams

11-BG Series

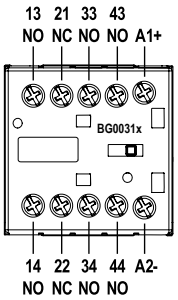

BF Series

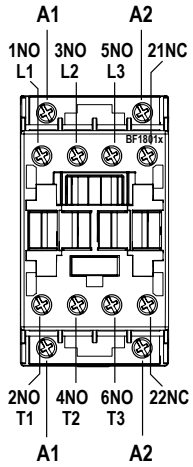

[3] A person who, by possession of a recognized degree or certificate of professional training, or who, by extensive knowledge, training and experience, has successfully demonstrated the ability to solve problems relating to the subject matter and work.

© Banner Engineering Corp. All rights reserved. www.bannerengineering.com

Accessories

Auxiliary Contacts for Mechanically Linked Contactors

11-BGX10-40
- Non-Safety Auxiliary Contacts: Adds normally open contacts to the primary contactor(s).
- Contacts: 4 N.O.
- Positively Guided: No (Aux. only)
- Used with: 11-BG Series



11-G484-30
- Safety/Auxiliary Contacts: Adds normally open contacts to the primary contactor(s).
- Contacts: 3 N.O.
- Positively Guided: Yes
- Used with: BF Series



Suppressors for Mechanically Linked Contactors

11-BGX77-048
- Suppressor for Mechanically Linked Contactors: Extends the life of the actuating device—such as a light screen or control module—that uses a mechanically linked contactor. (Two are required for each pair of relays.)
- Voltage: 48 V DC (maximum)
- Used with: 11-BG00-31-D024



Contact Us

Banner Engineering Corp. headquarters is located at: 9714 Tenth Avenue North | Plymouth, MN 55441, USA | Phone: + 1 888 373 6767

For worldwide locations and local representatives, visit www.bannerengineering.com.

Banner Engineering Corp Limited Warranty

Banner Engineering Corp. warrants its products to be free from defects in material and workmanship for one year following the date of shipment. Banner Engineering Corp. will repair or replace, free of charge, any product of its manufacture which, at the time it is returned to the factory, is found to have been defective during the warranty period. This warranty does not cover damage or liability for misuse, abuse, or the improper application or installation of the Banner product.

THIS LIMITED WARRANTY IS EXCLUSIVE AND IN LIEU OF ALL OTHER WARRANTIES WHETHER EXPRESS OR IMPLIED (INCLUDING, WITHOUT LIMITATION, ANY WARRANTY OF MERCHANTABILITY OR FITNESS FOR A PARTICULAR PURPOSE), AND WHETHER ARISING UNDER COURSE OF PERFORMANCE, COURSE OF DEALING OR TRADE USAGE.

This Warranty is exclusive and limited to repair or, at the discretion of Banner Engineering Corp., replacement. **IN NO EVENT SHALL BANNER ENGINEERING CORP. BE LIABLE TO BUYER OR ANY OTHER PERSON OR ENTITY FOR ANY EXTRA COSTS, EXPENSES, LOSSES, LOSS OF PROFITS, OR ANY INCIDENTAL, CONSEQUENTIAL OR SPECIAL DAMAGES RESULTING FROM ANY PRODUCT DEFECT OR FROM THE USE OR INABILITY TO USE THE PRODUCT, WHETHER ARISING IN CONTRACT OR WARRANTY, STATUTE, TORT, STRICT LIABILITY, NEGLIGENCE, OR OTHERWISE.**

Banner Engineering Corp. reserves the right to change, modify or improve the design of the product without assuming any obligations or liabilities relating to any product previously manufactured by Banner Engineering Corp. Any misuse, abuse, or improper application or installation of this product or use of the product for personal protection applications when the product is identified as not intended for such purposes will void the product warranty. Any modifications to this product without prior express approval by Banner Engineering Corp will void the product warranties. All specifications published in this document are subject to change; Banner reserves the right to modify product specifications or update documentation at any time. Specifications and product information in English supersede that which is provided in any other language. For the most recent version of any documentation, refer to: www.bannerengineering.com.

For patent information, see www.bannerengineering.com/patents.

© Banner Engineering Corp. All rights reserved. www.bannerengineering.com