MODEL NO.	"TL"	"AL"	"L"	"D"	P/N
BTA29S	38.1 [1.5]	27.9 [1.1]	2743.2 [108]	3.18 [.125]	21470
BTA24S	38.1 [1.5]	27.9 [1.1]	1219.2 [48]	3.18 [.125]	21326
BTA23SM600	38.1 [1.5]	27.9 [1.1]	914.4 [36]	3.18 [.125]	20388
BTA23SM.62	38.1 [1.5]	15.7 [.62]	914.4 [36]	3.18 [.125]	20052
BTA13S	38.1 [1.5]	27.9 [1.1]	914.4 [36]	1.57 [.062]	20195
BTA21.5S	38.1 [1.5]	27.9 [1.1]	457.2 [18]	3.18 [.125]	20163
BTA210S	38.1 [1.5]	27.9 [1.1]	3048 [120]	3.18 [.125]	20290
BTA211S	38.1 [1.5]	27.9 [1.1]	3352.8 [132]	3.18 [.125]	20291
BTA215S	38.1 [1.5]	27.9 [1.1]	4572 [180]	3.18 [.125]	20341
BTA21S	38.1 [1.5]	27.9 [1.1]	304.8 [12]	3.18 [.125]	20806
BTA26S	38.1 [1.5]	27.9 [1.1]	1828.8 [72]	3.18 [.125]	20377
BTA23S	38.1 [1.5]	27.9 [1.1]	914.4 [36]	3.18 [.125]	20008

NOTES:

1. 'M600' SUFFIX INDICATES FIBERS POTTED ON ANGLED END WITH EPOXY THAT OPERATES IN MAX. TEMPERATURE OF 600°F.

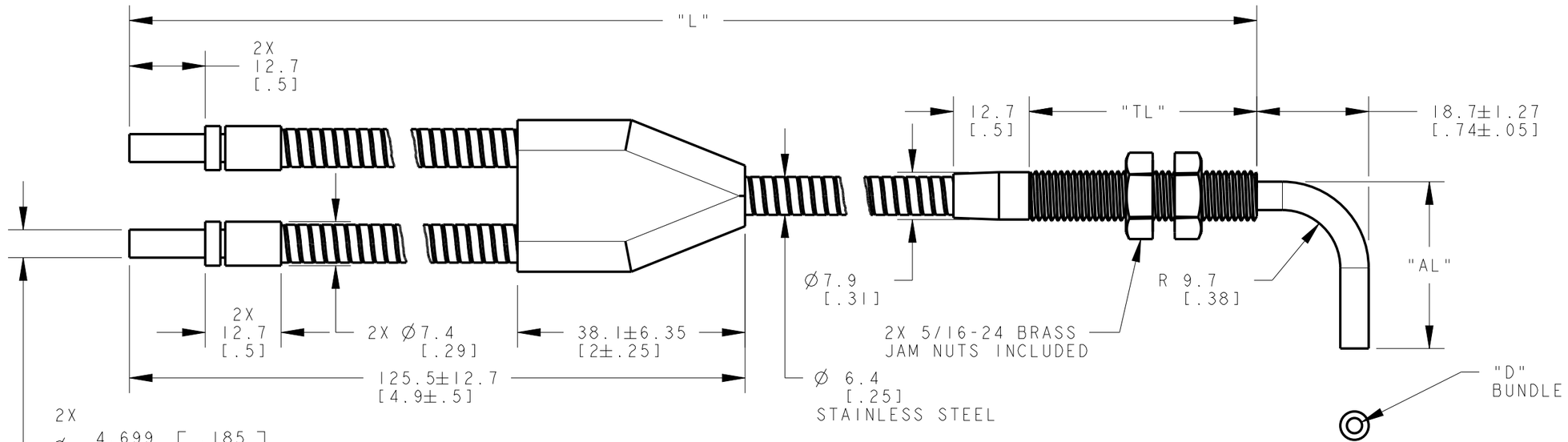

NOTES:
1. ALL DIMENSIONS ARE MILLIMETERS [INCHES] UNLESS OTHERWISE NOTED.
2. REFER TO "www.bannerengineering.com" FOR ADDITIONAL DATA AND SPECIFICATIONS.

This drawing is the property of BANNER ENGINEERING CORP. Any use or reproduction, in any form, without prior written permission of Banner is prohibited.
© Banner Engineering Corp.

THIRD ANGLE PROJECTION

BANNER ENGINEERING CORP.
www.bannerengineering.com

TITLE

BTA2 SERIES SS TERMINATED

SIZE	DRAWING NO.	REV.
B	161912	A

SCALE 5:4 | SHEET 1 OF 2

CREO

ПРОМЭЛЕКТРОНИКА/ sales@prom-elec.com

MODEL NO.	"TL"	"AL"	"L"	"D"	P/N
BTAI3SM2.4	38.1 [1.5]	61 [2.4]	914.4 [36]	1.57 [.062]	23169
BTAI2SM2.4	38.1 [1.5]	61 [2.4]	609.6 [24]	1.57 [.062]	00000
BTA.53S	38.1 [1.5]	27.9 [1.1]	914.4 [36]	0.81 [.032]	23240
BTA25SM600	38.1 [1.5]	27.9 [1.1]	1524 [60]	3.18 [.125]	00000
BTA.53SM.62	38.1 [1.5]	15.7 [.62]	914.4 [36]	0.81 [.032]	23259
BTAI2S	38.1 [1.5]	27.9 [1.1]	609.6 [24]	1.57 [.062]	23330
BTA.753S	38.1 [1.5]	27.9 [1.1]	914.4 [36]	1.17 [.046]	23562
BTAI2.8S	38.1 [1.5]	27.9 [1.1]	838.2 [33]	1.57 [.062]	00000
BTAI2.83S	38.1 [1.5]	27.9 [1.1]	863.6 [34]	1.57 [.062]	23777
BTAI2.7S	38.1 [1.5]	27.9 [1.1]	812.8 [32]	1.57 [.062]	23778
BTAI2.33S	38.1 [1.5]	27.9 [1.1]	711.2 [28]	1.57 [.062]	23779
BTA23SI.9	38.1 [1.5]	47.8 [1.88]	914.4 [36]	3.18 [.125]	23825
BTAI3SMT.87M.62	22.1 [.87]	15.7 [.62]	914.4 [36]	1.57 [.062]	23839
BTA23SM.8	38.1 [1.5]	20.3 [.8]	914.4 [36]	3.18 [.125]	00000
BTA214SM.8	38.1 [1.5]	20.3 [.8]	4267.2 [168]	3.18 [.125]	00000
BTAI4S	38.1 [1.5]	27.9 [1.1]	1219.2 [48]	1.57 [.062]	23883
BTAI5S	38.1 [1.5]	27.9 [1.1]	1524 [60]	1.57 [.062]	00000
BTAII5S	38.1 [1.5]	27.9 [1.1]	4572 [180]	1.57 [.062]	00000
BTAII2S	38.1 [1.5]	27.9 [1.1]	3657.6 [144]	1.57 [.062]	00000
BTA26SM600	38.1 [1.5]	27.9 [1.1]	1828.8 [72]	3.18 [.125]	24273
BTA26SM.8	38.1 [1.5]	20.3 [.8]	1828.8 [72]	3.18 [.125]	00000
BTA214S	38.1 [1.5]	27.9 [1.1]	4267.2 [168]	3.18 [.125]	24465
BTAIIS	38.1 [1.5]	27.9 [1.1]	304.8 [12]	1.57 [.062]	24475
BTA227S	38.1 [1.5]	27.9 [1.1]	8229.6 [324]	3.18 [.125]	00000
BTAI8S	38.1 [1.5]	27.9 [1.1]	2438.4 [96]	1.57 [.062]	24597
BTA23SMALI.5	38.1 [1.5]	38.1 [1.5]	914.4 [36]	3.18 [.125]	24914
BTA26SMALI.5	38.1 [1.5]	38.1 [1.5]	1828.8 [72]	3.18 [.125]	00000
BTAII.5S	38.1 [1.5]	27.9 [1.1]	457.2 [18]	1.57 [.062]	00000
BTAI.5I.5S	38.1 [1.5]	27.9 [1.1]	457.2 [18]	2.29 [.090]	00000

MODEL NO.	"TL"	"AL"	"L"	"D"	P/N
BTA22S	38.1 [1.5]	27.9 [1.1]	609.6 [24]	3.18 [.125]	21895
BTA225S	38.1 [1.5]	27.9 [1.1]	7620 [300]	3.18 [.125]	21879
BTAII0S	38.1 [1.5]	27.9 [1.1]	3048 [120]	1.57 [.062]	21710
BTAI6S	38.1 [1.5]	27.9 [1.1]	1828.8 [72]	1.57 [.062]	21705
BTA25S	38.1 [1.5]	27.9 [1.1]	1524 [60]	3.18 [.125]	21473
BTA27S	38.1 [1.5]	27.9 [1.1]	2133.6 [84]	3.18 [.125]	21472
BTA28S	38.1 [1.5]	27.9 [1.1]	2438.4 [96]	3.18 [.125]	21471
BTA26SM.62	38.1 [1.5]	15.7 [.62]	1828.8 [72]	3.18 [.125]	22967
BTAI.54S	38.1 [1.5]	27.9 [1.1]	1219.2 [48]	2.29 [.090]	23060
BTAI3S2.2	38.1 [1.5]	55.9 [2.2]	914.4 [36]	1.57 [.062]	00000
BTA230S	38.1 [1.5]	27.9 [1.1]	9144 [360]	3.18 [.125]	82493
BTAI.52S	38.1 [1.5]	27.9 [1.1]	609.6 [24]	2.29 [.090]	00000
BTAI3SM600	38.1 [1.5]	27.9 [1.1]	914.4 [36]	1.57 [.062]	22932
BTA25.5S	38.1 [1.5]	27.9 [1.1]	1676.4 [66]	3.18 [.125]	22643
BTA225SM600	38.1 [1.5]	27.9 [1.1]	7620 [300]	3.18 [.125]	21991

NOTES:

1. 'M600' SUFFIX INDICATES FIBERS POTTED ON ANGLED END WITH EPOXY THAT OPERATES IN MAX. TEMPERATURE OF 600°F.

NOTES:
1. ALL DIMENSIONS ARE MILLIMETERS [INCHES] UNLESS OTHERWISE NOTED.
2. REFER TO "www.bannerengineering.com" FOR ADDITIONAL DATA AND SPECIFICATIONS.

This drawing is the property of BANNER ENGINEERING CORP. Any use or reproduction, in any form, without prior written permission of Banner is prohibited.
© Banner Engineering Corp.

THIRD ANGLE PROJECTION

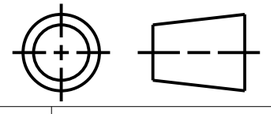

BANNER ENGINEERING CORP.
www.bannerengineering.com

TITLE

BTA2 SERIES SS TERMINATED

SIZE	DRAWING NO.	REV.
B	161912	A
SCALE 3:2	SHEET 2 OF 2	

CREO