MULTI-BEAM Optical Edgeguide System

Datasheet

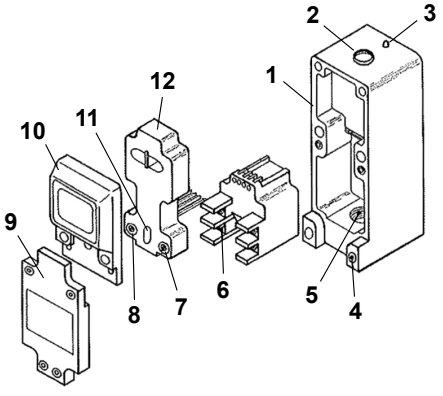

1. Scanner block housing
2. Access to sensitivity adjustment (located under the lower cover)
3. Status/alignment indicator LED
4. Mounting hole
5. Conduit entrance
6. Wiring terminals on the power block
7. Logic timing adjustment
8. Logic timing adjustment
9. Lower cover, supplied with the scanner block
10. Upper cover (lens), supplied with the scanner block
11. Light/dark operate select
12. Logic module

The logic timing adjustments control on-off delay, range 1-15 seconds.

WARNING:

- **Do not use this device for personnel protection**
- Using this device for personnel protection could result in serious injury or death.
- This device does not include the self-checking redundant circuitry necessary to allow its use in personnel safety applications. A device failure or malfunction can cause either an energized (on) or de-energized (off) output condition.

Models

Model	Supply Voltage
3GA5-14	120 V AC
3GB5-14	220/240 V AC

Overview

The MULTI-BEAM Optical Edgeguide System is a unique sensor, used in pairs, to provide complete edge-guidance sensing and control. Each sensor consists of a special MULTI-BEAM scanner block, power block, and logic module.

Each component is designed specifically for the edge-guiding function. The scanner block, which contains a modulated emitter and receiver, works together with the power block such that the emitter is gated "ON" only during positive half cycles of the 50/60Hz power, and the receiver is gated ON only during the negative half cycles. The opposing sensor operates the same way, except that it is wired with power leads L1 and L2 reversed from the way they are connected to the first sensor. As a result, the sensor A emitter will only operate the sensor B receiver, and vice-versa. This synchronization of the two sensors prevents unwanted crosstalk while permitting very high excess gain.

The logic module includes both ON- and OFF-DELAY timing functions. The ON-DELAY ignores short-term nuisance signals, and the OFF-DELAY permits a controlled amount of timed correction.

The logic modules have a LIGHT/DARK OPERATE programming jumper. Typically, the inboard receiver is programmed for LIGHT OPERATE, and the outboard receiver for DARK OPERATE. In this way, the web being guided is properly positioned in the "deadband" between the sensing beams when one beam is broken and the other is not. The spacing between the beams is fixed at 1/2 inch (12.5 mm) and this becomes the "deadband" for edgeguiding. If tighter control is desired, the two sensors may be mounted at an angle to the edge of the web such that the effective beam spacing is reduced to 1/2 inch times the cosine of the angle.

Figure 1. Deadband adjustment

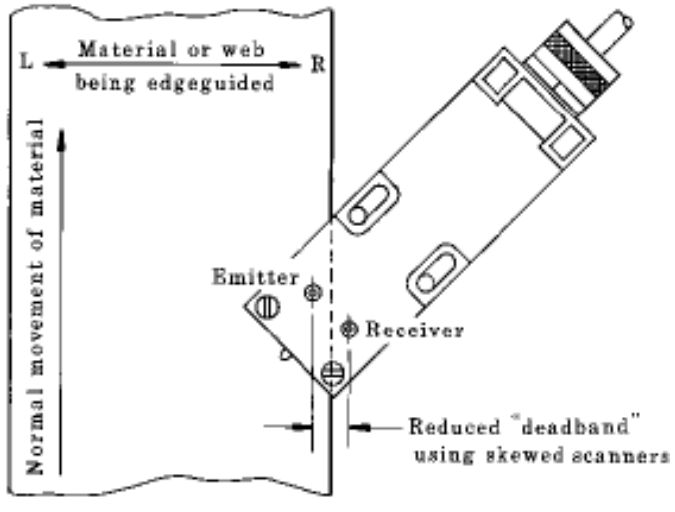

ПРОМЭЛЕКТРОНИКА/ sales@prom-elec.com

The power block contains the same 3/4 amp solid-state switch as is used in standard MULTI-BEAM power block models PBA and PBB, which will operate most ac solenoids, relays, or programmable logic controllers (PLCs). The very high optical penetrating power (excess gain) plus rugged MULTIBEAM construction permits reliable control in harsh environments such as sawmills or power sanding machines where conventional photoelectrics could not survive the contamination levels. If necessary, optical penetrating power may be reduced by substituting model UC-D upper covers.

Install the Optical Edgeguide System

1. Mount the sensors exactly parallel to each other with their lenses directly opposite each other (see Figure 1 on page 1).
2. Verify the wiring according to the wiring diagram (see Wiring Diagrams on page 2). One sensor must be configured for dark operate (jumper installed) and the other must be configured to light operate (remove jumper)
3. Perform the operation checkout procedure (using alignment indicator LEDs):
   - Both beams unblocked: Both LEDs are on and one output is on
   - One beam blocked: One LED is off and no output in on
   - Both beams blocked: Both LEDs are off and the other output is on
4. If necessary, decrease the SENSITIVITY (beneath lower cover; rotate control counterclockwise) to prevent "burn-through" when guiding non-metallic materials (and/or use model UC-D upper covers).

Wiring Diagrams

Figure 2. Functional schematic for the Optical Edgeguide System

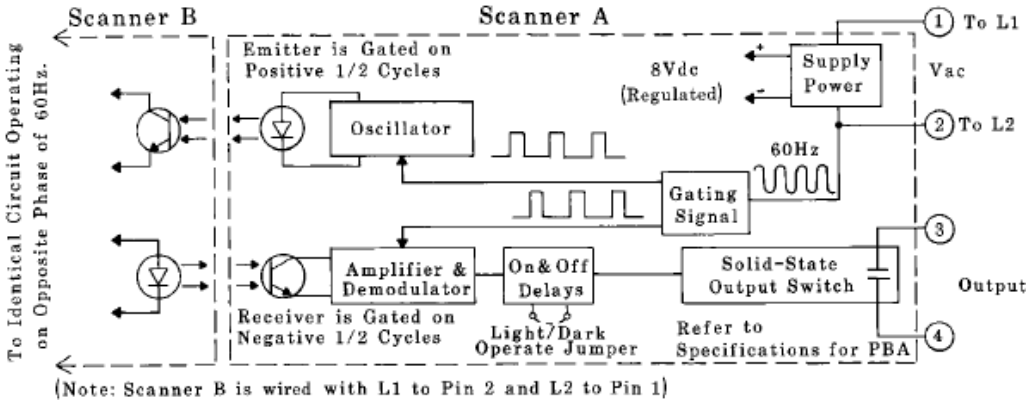

Figure 3. Wiring diagram for the Optical Edgeguide System

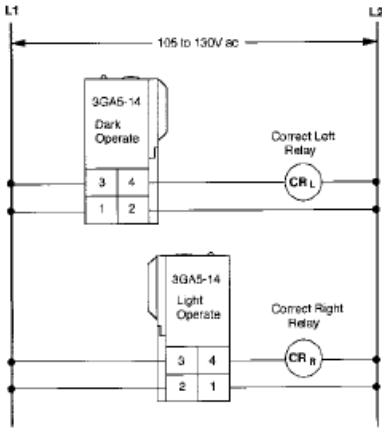

Specifications

Supply Voltage
3GA5-14: 105 to 130 V AC (50/60Hz)
3GB5-14: 210 to 250 V AC (50/60Hz)

Range
100 feet (30 m)
Excess gain of 10,000X at 1 foot (30 cm)
Materials to be guided must be totally opaque

Output Configuration
SPST solid-state switch, 3/4 amp maximum (derated to 1/2 amp at 70 °C)
10 amp maximum inrush for one second, or 30 amps for one AC cycle (non-repeating)
On-state voltage drop less than 2.5 V AC at full load
Off-state leakage current less than 100 microamps

Indicator LED
Red LED status indicator on top of the housing is "on" when the receiver detects modulated light (unblocked) condition

Construction
Same as standard MULTI-BEAMs
Reinforced VALOX® housing; components totally encapsulated

Response Time
Response time is a function of the ON and OFF delay timers, which are independently adjustable over a useful range of from 1 to 15 seconds
Shorter ranges may be available as a special order; contact Banner Engineering for more information

Environmental Rating
NEMA standards 1, 3, 12, and 13

Operating Temperature
–40 °C to +70 °C (–40 °F to +158 °F)

Performance Curves

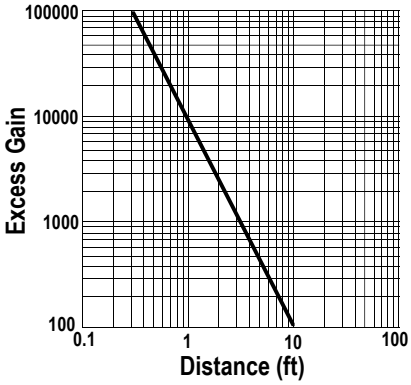

Dimensions

All measurements are listed in millimeters [inches], unless noted otherwise.

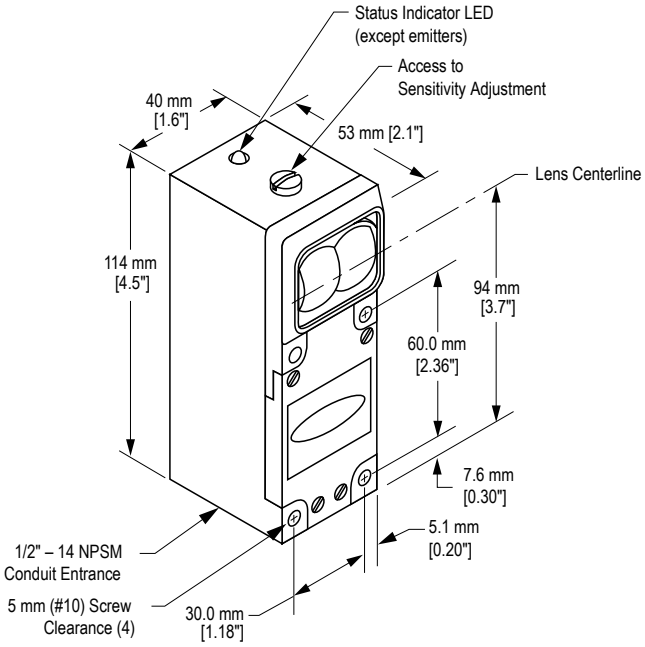

Accessories

SMB700

- Right-angle mounting bracket
- 11 gauge zinc-plated steel
- 70 mm wide by 60 mm deep x 60 mm high
- Includes a cable gland assembly and lock washer

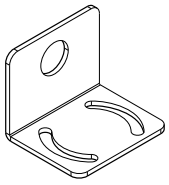

SMB700SS

- Right-angle mounting bracket
- 11 gauge stainless steel
- 70 mm wide by 60 mm deep x 60 mm high

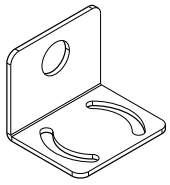

SMB700F

- Flat mounting bracket
- 11 gauge stainless steel
- 70 mm x 110 mm



RF1-2NPS Cable Gland Assembly; includes cord grips for 2.5 to 10 mm cables and a bracket lockwasher

MBC-4 7/8 in-16UNF Quick Disconnect Receptacle; 4-pin Male Pin-out Straight Connector; Wire Length: 300 mm (12 in); Chrome plated brass housing

4-Pin 7/8-in Cordsets—Single Ended				
Model	**Length**	**Style**	**Dimensions**	**Pinout (Female)**
MBCC-406	1.83 m (6 ft)	Straight	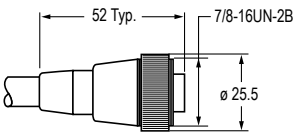	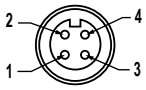 1 = Brown 2 = White 3 = Blue 4 = Black
MBCC-412	3.66 m (12 ft)			
MBCC-430	9.14 m (30 ft)			

Replacement Models	Description
3SBG	Scanner block
3PBA	Power block, 105-130 V AC; 50/60 Hz
3PBB	Power block, 210-250 V AC; 50/60 Hz
3LM5-14	Logic module
UC-L	Upper cover, supplied with scanner block
LCMB	Lower (wiring) cover, supplied with scanner block

Banner Engineering Corp. Limited Warranty

Banner Engineering Corp. warrants its products to be free from defects in material and workmanship for one year following the date of shipment. Banner Engineering Corp. will repair or replace, free of charge, any product of its manufacture which, at the time it is returned to the factory, is found to have been defective during the warranty period. This warranty does not cover damage or liability for misuse, abuse, or the improper application or installation of the Banner product.

THIS LIMITED WARRANTY IS EXCLUSIVE AND IN LIEU OF ALL OTHER WARRANTIES WHETHER EXPRESS OR IMPLIED (INCLUDING, WITHOUT LIMITATION, ANY WARRANTY OF MERCHANTABILITY OR FITNESS FOR A PARTICULAR PURPOSE), AND WHETHER ARISING UNDER COURSE OF PERFORMANCE, COURSE OF DEALING OR TRADE USAGE.

This Warranty is exclusive and limited to repair or, at the discretion of Banner Engineering Corp., replacement. **IN NO EVENT SHALL BANNER ENGINEERING CORP. BE LIABLE TO BUYER OR ANY OTHER PERSON OR ENTITY FOR ANY EXTRA COSTS, EXPENSES, LOSSES, LOSS OF PROFITS, OR ANY INCIDENTAL, CONSEQUENTIAL OR SPECIAL DAMAGES RESULTING FROM ANY PRODUCT DEFECT OR FROM THE USE OR INABILITY TO USE THE PRODUCT, WHETHER ARISING IN CONTRACT OR WARRANTY, STATUTE, TORT, STRICT LIABILITY, NEGLIGENCE, OR OTHERWISE.**

Banner Engineering Corp. reserves the right to change, modify or improve the design of the product without assuming any obligations or liabilities relating to any product previously manufactured by Banner Engineering Corp. Any misuse, abuse, or improper application or installation of this product or use of the product for personal protection applications when the product is identified as not intended for such purposes will void the product warranty. Any modifications to this product without prior express approval by Banner Engineering Corp will void the product warranties. All specifications published in this document are subject to change; Banner reserves the right to modify product specifications or update documentation at any time. Specifications and product information in English supersede that which is provided in any other language. For the most recent version of any documentation, refer to: www.bannerengineering.com.

For patent information, see www.bannerengineering.com/patents.

© Banner Engineering Corp. All rights reserved