REVISION HISTORY			
REV	DESCRIPTION	DATE	APPROVED
A	INITIAL APPROVAL;	10-2-13	R.LEONARD J.STENGER

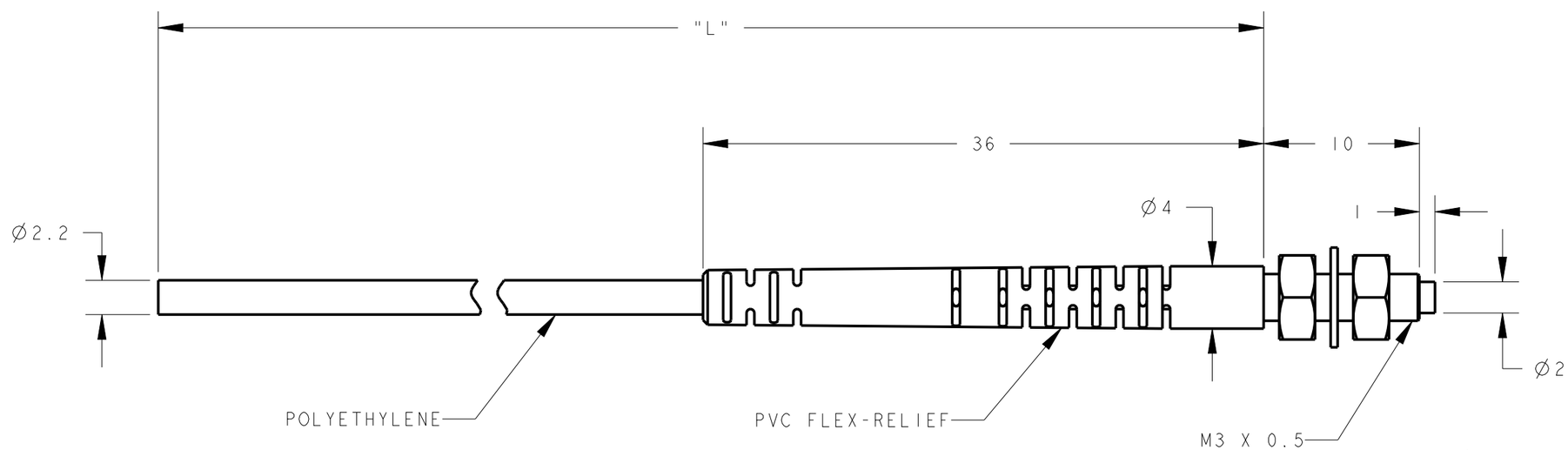

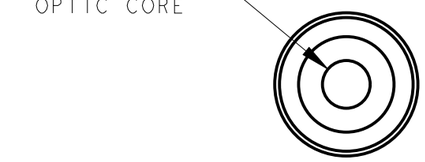

DETAIL A
SCALE 8:1

MODEL NO.	"L"	P/N
PIT46UM3-VL	2000	85748
PIT43UM3-VL	1000	85747

NOTES:

1. OPERATING TEMPERATURE -55°C ~ +70°C.
2. MINIMUM BEND RADIUS R25.

Dimensions are
Millimeters [inches]
TOLERANCES
(Unless Otherwise Specified)
X = ±0.5mm
X.X = ±0.25
X.XX = ±0.12mm
[X.X = ±.1"]
[.XX = ±.01"]
[.XXX = ±.005"]
ANGLE = ±3°
"L" = 40mm/Meter
[.5"/Foot]

BANNER ENGINEERING Corp.
9717 10th Ave. North
Minneapolis, MN 55441
Tel # 763-544-3164
Fax # 763-544-3573
www.bannerengineering.com

This drawing is the property of BANNER ENGINEERING Corp. and is proprietary in general and in detail. Its contents shall not be revealed to outside parties without the written consent of BANNER.

PIT43UM3-VL	PLASTIC FIBEROPTIC ASSEMBLY & MOD'S		
9-17-13	1 OF 1	87547	A

ПРОМЭЛЕКТРОНИКА/ sales@prom-elec.com