# 3-pin A-Code Double-Ended M8 Female to M8 Male High-Flex Cordsets

## Features

- HighFlex20™ cables offer 20 million bend cycles when properly installed; see warranty for details
- 3-pin A-code M8 female to male double-ended
- Straight and right-angle options
- Gray TPE jacket, unshielded

## Models

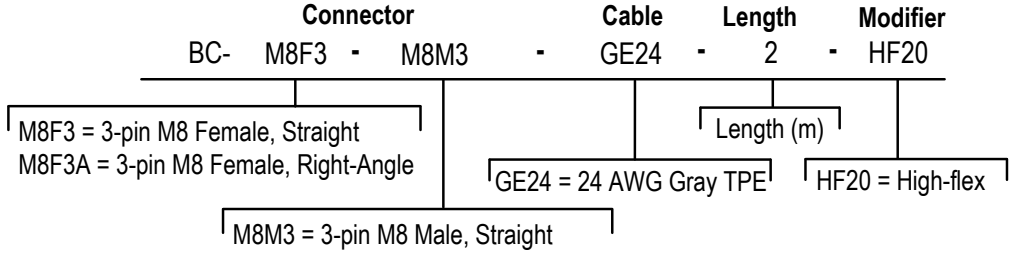


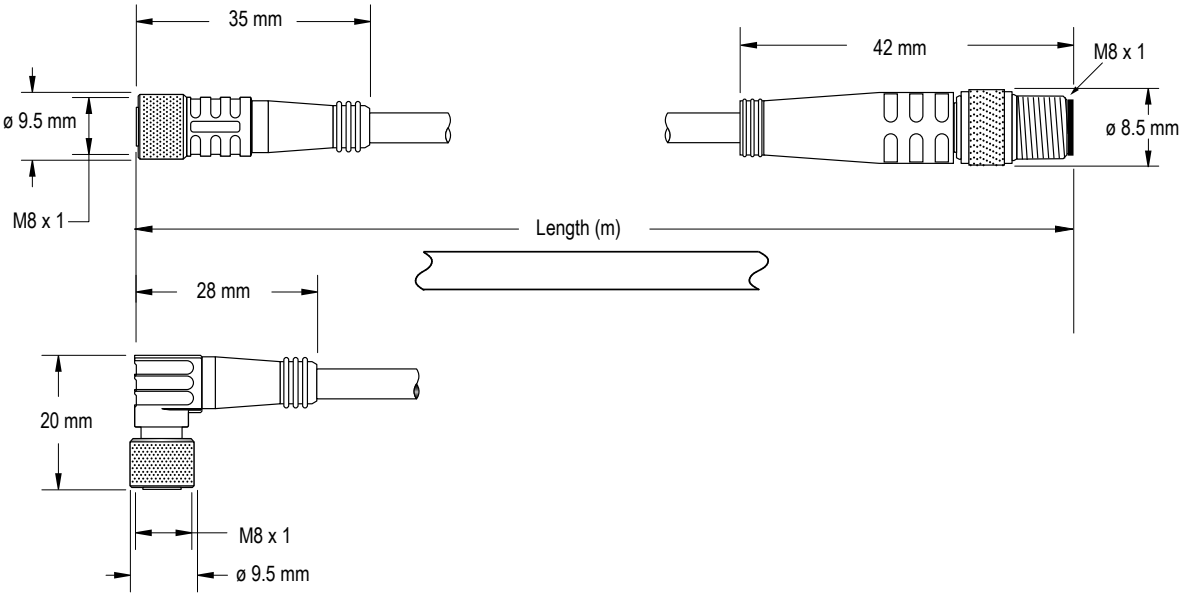


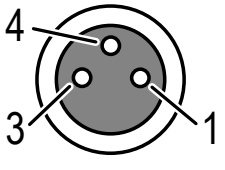


1 = Brown
3 = Blue
4 = Black




## Specifications

**Current Rating**
4 A

**Voltage Rating**
30 V DC

**Recommended Bend Radius**
Static: 5× the outside diameter
Dynamic: 10× the outside diameter

**Cable**
24 AWG
Outer diameter: 4.19 mm

**Construction**
Coupling nut material: Nickel-plated brass
Contact carrier: Black nylon
Connector body: Black TPU
Jacket material: Gray TPE
UL2517

**Connections**
Integral 4-pin M8 quick disconnect

**Flexing**
Meets 20 million flex cycles when properly installed
10x outer diameter
20°C, 50% Relative Humidity, ≤ one second per half cycle

**Operating Conditions**
Operating temperature: –40 °C to +70 °C (–40 °F to +158 °F)
Storage temperature: –40 °C to +70 °C (–40 °F to +158 °F)
90% at +50 °C maximum relative humidity (non-condensing)

Original Instructions
26-May-26

© Banner Engineering Corp. All rights reserved.
www.bannerengineering.com

252091
p/n: 252091 Rev. B

ПРОМЭЛЕКТРОНИКА/ sales@prom-elec.com

# High-Flex Cordsets Limited Warranty

Banner Engineering Corp. warrants the High Flex Cordsets (models ending in “HF20”) will perform for up to 20 million flex cycles, provided the product is:

- Properly installed with a bend radius of no less than 10 times the outer cable diameter
- Operated within an environment having an ambient temperature of 18°C to 22°C (64°F to 72°F), 50% +/- 5% relative humidity, and a cycle rate less than or equal to 2 Hz
- Used in a verified application approved by an authorized Banner Engineering Corp representative
- Registered through this completed and signed warranty form prior to use

If a properly registered High Flex Cordset fails prior to reaching 20 million flex cycles under these specified conditions, Banner Engineering Corp. will provide a replacement free of charge. All claims are subject to verification and approval by Banner Engineering Corp. This limited warranty applies only to the flexing portion of the High Flex Cordset. It does not cover damage resulting from misuse, abuse, failure to maintain, improper installation, environmental extremes, mechanical damage, or use in unapproved applications.

Warranty claims must be initiated through Banner Engineering Corp’s standard return materials process. Banner Engineering Corp reserves the right to evaluate the failed product, which may include review of:

- The registered application
- Product installation and usage conditions
- Flex cycle validation data
- A site visit or other assessment by an authorized Banner Engineering Corp representative

**THIS LIMITED WARRANTY IS EXCLUSIVE AND IN LIEU OF ALL OTHER WARRANTIES WHETHER EXPRESS OR IMPLIED (INCLUDING, WITHOUT LIMITATION, ANY WARRANTY OF MERCHANTABILITY OR FITNESS FOR A PARTICULAR PURPOSE), AND WHETHER ARISING UNDER COURSE OF PERFORMANCE, COURSE OF DEALING OR TRADE USAGE.**

This Warranty is exclusive and limited to replacement, or at the discretion of Banner Engineering Corp., repair. **IN NO EVENT SHALL BANNER ENGINEERING CORP. BE LIABLE TO BUYER OR ANY OTHER PERSON OR ENTITY FOR ANY EXTRA COSTS, EXPENSES, LOSSES, LOSS OF PROFITS, OR ANY INCIDENTAL, CONSEQUENTIAL OR SPECIAL DAMAGES RESULTING FROM ANY PRODUCT DEFECT OR FROM THE USE OR INABILITY TO USE THE PRODUCT, WHETHER ARISING IN CONTRACT OR WARRANTY, STATUTE, TORT, STRICT LIABILITY, NEGLIGENCE, OR OTHERWISE.**

Banner Engineering Corp. reserves the right to change, modify, or improve the design of the product without assuming any obligations or liabilities relating to any product previously manufactured by Banner Engineering Corp.


© Banner Engineering Corp. All rights reserved.