Features

100 mm IO-Link Controlled Multicolor RGB Flush Mount Tower Light

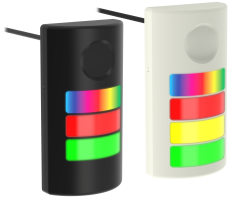

- Rugged, versatile, and easy-to-install 3- and 4-segment tower lights
- Flush mounting allows for easy integration to machines and equipment
- IO-Link gives full access to color, flashing, and dimming settings, as well as advanced animations like run and level modes which provides dynamic response to changing machine conditions
- Illuminated segments provide easy-to-see operator guidance and indication of equipment status
- Audible models available with sealed audible element
- 14 selectable audible tones and audible intensity control
- 18 V DC to 30 V DC operation
- No assembly required
- Available in black or cool gray housing to match different machine styles

Models

Family	Style	Number of Segments	Audible Alarm	Control	Housing Color	Connection
TLF100	**P**	**3**		**K**	**C**	**QP**
	P = Pro	3 = Three segments 4 = Four segments	Blank = None A = Sealed audible	K = IO-Link	Blank = Black C = Cool gray	QP = 150 mm (6 in) PVC-jacketed cable with a 4-pin M12 male quick-disconnect connector

Wiring Diagram

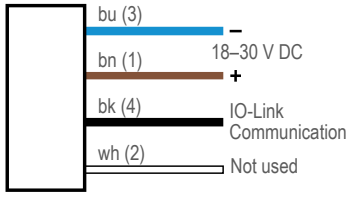

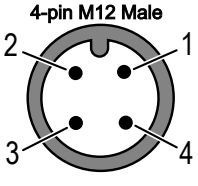

Key

1 = Brown
2 = White
3 = Blue
4 = Black

IO-Link Process Data Out (Master to Device)

IO-Link® is a point-to-point communication link between a master device and a sensor and/or light. It can be used to automatically parameterize sensors or lights and to transmit process data. For the latest IO-Link protocol and specifications, please visit www.io-link.com.

For the latest IODD files, please refer to the Banner Engineering Corp website at: www.bannerengineering.com.

Basic Segment Mode

Use process data to set each segment to off, solid on, flash, or animation mode, and to control audible. Use parameter data to change color, intensity, flash speed, and select animation type.

Advanced Segment Mode

Use process data to activate each segment and control color, intensity, flash, audible, and other animation types. Use parameter data to create custom colors, intensity, and flash speeds.

Run Mode

Use process data to control entire tower light and select color, intensity, flash, audible, and run mode animations. Use parameter data to create custom colors, intensity, and flash speeds.

Basic Segment Mode, Advanced Segment Mode, and Run Mode

Animation	Description
Off	Segment is off
Steady	Color 1 is solid on at defined intensity
Flash	Color 1 flashes at defined speed, color intensity, and pattern (normal, strobe, three pulse, SOS, or random)

Continued on page 2

Original Instructions
16-Apr-26

© Banner Engineering Corp. All rights reserved.
www.bannerengineering.com

224884
p/n: 224884 Rev. A

ПРОМЭЛЕКТРОНИКА/ sales@prom-elec.com

Continued from page 1

Animation	Description
Two Color Flash	Color 1 and Color 2 flash alternately at defined speed, color intensities, and pattern (normal, strobe, three pulse, SOS, or random)
Two Color Shift	Color 1 and Color 2 flash alternately on adjacent LEDs at defined speed and color intensities (Basic and Advanced Segment Mode Only)
Ends Steady	Color 1 is solid on in the center of the segment as defined by Percent Width of Color 1 at defined color intensity while Color 2 is solid on for half of the remaining percentage on each end of the segment at defined color intensity (Basic and Advanced Segment Mode Only)
Ends Flash	Color 1 is solid on in the center of the segment as defined by Percent Width of Color 1 at defined color intensity while Color 2 flashes on for half of the remaining percentage on each end of the segment at defined speed, color intensity, and pattern (normal, strobe, three pulse, SOS, or random) (Basic and Advanced Segment Mode Only)
Scroll	Color 1 fills the segment as defined by Percent Width of Color 1 and moves in one direction up or down against the background of Color 2 at the defined speed, color intensities, style, and direction
Center Scroll	Color 1 fills the segment as defined by Percent Width of Color 1 and moves in or out from the center of the segment against the background of Color 2 at the defined speed, color intensities, style, and direction (Basic and Advanced Segment Mode Only)
Bounce	Color 1 fills the segment as defined by Percent Width of Color 1 and moves up and down against the background of Color 2 at the defined speed, color intensities, and style
Center Bounce	Color 1 fills the segment as defined by Percent Width of Color 1 and moves in and out from the center of the segment against the background of Color 2 at the defined speed, color intensities, and style (Basic and Advanced Segment Mode Only)
Intensity Sweep	Color 1 repeatedly increases and decreases intensity between 0% to 100% at defined speed and color intensity
Two Color Sweep	Color 1 and Color 2 define the end values of a line across the color gamut. The segment continuously displays a color by moving along the line at the defined speed and color intensities
Spectrum	The segment scrolls through 13 predefined colors with a different color on each LED at the defined speed, Color 1 intensity, and direction
Level Steady	Color 1 is solid ON at the defined intensity on one end of the device (Basic and Advanced Segment Mode Only)
Level Flash	Color 1 flashes at the defined speed, color intensity, and pattern (normal, strobe, three pulse, SOS, or random) on one end of the device (Basic and Advanced Segment Mode Only)

Level Mode

Use process data to set the level value and to control audible. Use parameter data to set range, thresholds, colors, intensities, flash speeds, and animation types.

Level Mode

General Settings	Description
Level Mode Value	Value of the level of the light (between 0 to 65,535)
Full Scale Value	Set the upper limit of the Level Mode Value (between 0 to 65,535)
Background Color and Intensity	A defined color and intensity is displayed on segments that are not active
Dominance	Dominant: The entire light displays the active threshold color Non-Dominant: Segments display their defined threshold colors
Sub-Segment Style	If Level Mode Value is a partial percentage of a segment, select if segment will be on steady or analog dimmed to the partial percentage
Filtering	Smooths the input signal by varying the sample size None: There is no filtering Low: The sample size is short and changes to the input signal are more noticeable High: The sample size is long and changes to the input signal are less noticeable
Hysteresis	Determines the signal value change needed to transition between thresholds and to prevent chatter None: The value follows the input signal High: A large value change is needed to transition between thresholds

Base and Threshold 1-4 Settings	Description
Threshold Type: Base	A defined animation state is displayed on segments that are not defined within a threshold
Threshold Type: 1-4	Level Mode Values that conform to Threshold Comparison Type ≤ or ≥ and the Threshold Value Percent are displayed on segments as defined by the threshold color, intensity, flash speeds, and run mode animation types

Gauge Mode

Gauge mode uses the light to display a colored band of segments in a position proportional to the gauge mode value.
Use process data to set the gauge mode value and to control audible. Use parameter data to set range, thresholds, colors, intensities, flash speeds, background, threshold markers, and animation types.

Gauge Mode

General Settings	Description
Gauge Mode Value	Value of the band position within the light (between 0 to 65,535)
Full Scale Value	Set the upper limit of the Gauge Mode Value (between 0 to 65,535)

Continued on page 3

© Banner Engineering Corp. All rights reserved.
www.bannerengineering.com

Continued from page 2

General Settings	Description
Filtering	Smooths the input signal by varying the sample size None: There is no filtering Low: The sample size is short and changes to the input signal are more noticeable High: The sample size is long and changes to the input signal are less noticeable
Hysteresis	Determines the signal value change needed to transition between thresholds and to prevent chatter None: The value follows the input signal High: A large value change is needed to transition between thresholds

Center, Threshold 1, and Threshold 2 Settings	Description
Threshold Type: Center	Gauge Mode Values not in Threshold 1 or Threshold 2 are positioned on a band of segments as defined by the center threshold color, intensity, flash speeds, backgrounds, band size percent width, and run mode animation types
Threshold Type: 1 & 2	Gauge Mode Values that conform to Threshold Comparison Type ≤ or ≥ and the Threshold Value Percent are positioned on a band of segments as defined by the threshold color, intensity, flash speeds, backgrounds, band size percent width, and run mode animation types

Audible Control—Use Audible Control to select the settings for the tower light's audible type, feedback, and volume.

Audible Control

Setting	Description
Audible Feedback	Defines the type of audible feedback
Audible Volume	Defines the volume of the audible tone
Audible Type	Defines the type of audible tone played

Installation Instructions

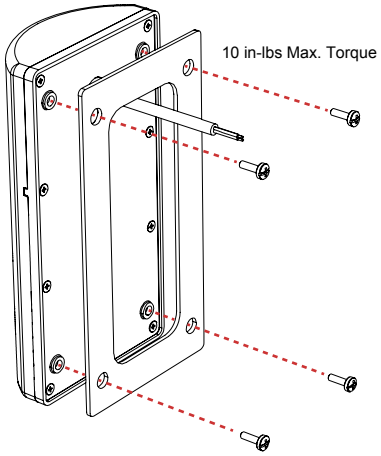

Mounting Surface Thickness	Length of Mounting Screws
≤ 8 mm	12 mm (supplied)
8 mm to 16 mm	20 mm
16 mm to 26 mm	30 mm
26 mm to 36 mm	40 mm
36 mm to 46 mm	50 mm

NOTE: Do not remove housing screws.

Bracket Mounting Instructions

The TLF100 can be mounted with the SMBTLF100F bracket in the following alternative orientations.

Bracket Orientation - Horizontal

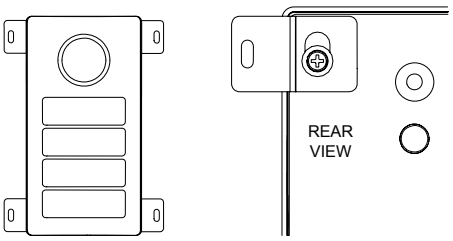

Bracket Orientation - Vertical

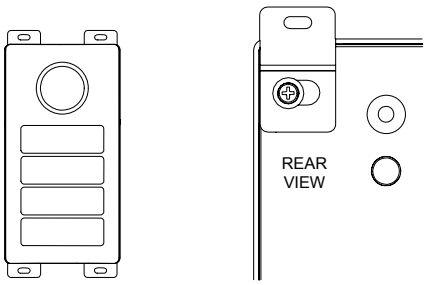

© Banner Engineering Corp. All rights reserved.
www.bannerengineering.com

Specifications

Supply Voltage and Current

18 V DC to 30 V DC

Typical current per LED segment:

85 mA at 18 V DC
59 mA at 24 V DC
47 mA at 30 V DC

Typical audible current: 24 mA

Maximum device current: 560 mA

Supply Protection Circuitry

Protected against reverse polarity and transient voltages

Input Response Time

Indicator On/Off Response Time: 20 ms (maximum)

Connections

Integral 4-pin M12 male quick-disconnect connector

Models with a quick-disconnect connector require a mating cordset

Construction

Bases, Covers, Light Segment: Polycarbonate

Operating Conditions

–40 °C to +50 °C (–40 °F to +122 °F)

95% at +50 °C maximum relative humidity (non-condensing)

Certifications

Banner Engineering BV
Park Lane, Culliganlaan 2F bus 3
1831 Diegem, BELGIUM

Turck Banner LTD Blenheim House
Blenheim Court
Wickford, Essex SS11 8YT
GREAT BRITAIN

Advanced Capabilities

IO-Link®

Environmental Rating

IP65, UL Type 4X, and IP69K per ISO 20653

NOTE: Do not spray cable with high-pressure sprayer, or cable damage will result.

Vibration and Mechanical Shock

Vibration: 10 Hz to 55 Hz, 0.5 mm peak-to-peak amplitude per IEC 60068-2-6

Shock: 15G 11 ms duration, half sine wave per IEC 60068-2-27

Audible Alarm

Values shown apply to continuous tone. Frequency and intensity response vary depending on the Audible Tone selected.

Oscillation Frequency: 3.0 kHz ± 250 Hz

Intensity:

Low volume (typical): 84 dB at 1 m
Medium volume (typical): 89 dB at 1 m
High volume (typical): 94 dB at 1 m

Required Overcurrent Protection

WARNING: Electrical connections must be made by qualified personnel in accordance with local and national electrical codes and regulations.

Overcurrent protection is required to be provided by end product application per the supplied table.

Overcurrent protection may be provided with external fusing or via Current Limiting, Class 2 Power Supply.

Supply wiring leads < 24 AWG shall not be spliced.

For additional product support, go to www.bannerengineering.com.

Supply Wiring (AWG)	Required Overcurrent Protection (A)	Supply Wiring (AWG)	Required Overcurrent Protection (A)
20	5.0	26	1.0
22	3.0	28	0.8
24	2.0	30	0.5

Color	Dominant Wavelength (nm) or Color Temperature (CCT)	Color Coordinates[1]		Lumen Output Per Segment (Typical at 25 °C)
		X	Y	
Green	532	0.181	0.735	7.5
Red	621	0.691	0.308	3.7
Orange	600	0.611	0.37	5.3
Amber	590	0.552	0.414	6.8
Yellow	578	0.473	0.474	9.8
Lime Green	565	0.393	0.535	10.1
Spring Green	509	0.157	0.553	7.8
Cyan	492	0.15	0.334	8.5
Sky Blue	485	0.146	0.241	8.4
Blue	467	0.137	0.056	1.4

Continued on page 5

[1] Refer to CIE 1931 chromaticity diagram or color chart to show equivalent color with indicated color coordinates. Actual coordinates may differ by 10%.

© Banner Engineering Corp. All rights reserved.
www.bannerengineering.com

Continued from page 4

Color	Dominant Wavelength (nm) or Color Temperature (CCT)	Color Coordinates		Lumen Output Per Segment (Typical at 25 °C)
		X	Y	
Violet	-	0.212	0.091	2.7
Magenta	-	0.379	0.177	5
Rose	-	0.508	0.23	4.1
White	5700K	0.328	0.337	12.1

FCC Part 15 Class B for Unintentional Radiators

(Part 15.105(b)) This equipment has been tested and found to comply with the limits for a Class B digital device, pursuant to part 15 of the FCC Rules. These limits are designed to provide reasonable protection against harmful interference in a residential installation. This equipment generates, uses, and can radiate radio frequency energy and, if not installed and used in accordance with the instructions, may cause harmful interference to radio communications. However, there is no guarantee that interference will not occur in a particular installation. If this equipment does cause harmful interference to radio or television reception, which can be determined by turning the equipment off and on, the user is encouraged to try to correct the interference by one or more of the following measures:

- Reorient or relocate the receiving antenna.
- Increase the separation between the equipment and receiver.
- Connect the equipment into an outlet on a circuit different from that to which the receiver is connected.
- Consult the dealer or an experienced radio/TV technician for help.

(Part 15.21) Any changes or modifications not expressly approved by the party responsible for compliance could void the user's authority to operate this equipment.

Industry Canada ICES-003(B)

This device complies with CAN ICES-3 (B)/NMB-3(B). Operation is subject to the following two conditions: 1) This device may not cause harmful interference; and 2) This device must accept any interference received, including interference that may cause undesired operation.

Cet appareil est conforme à la norme NMB-3(B). Le fonctionnement est soumis aux deux conditions suivantes : (1) ce dispositif ne peut pas occasionner d'interférences, et (2) il doit tolérer toute interférence, y compris celles susceptibles de provoquer un fonctionnement non souhaité du dispositif.

Dimensions

All measurements are listed in millimeters [inches], unless noted otherwise. The measurements provided are subject to change.

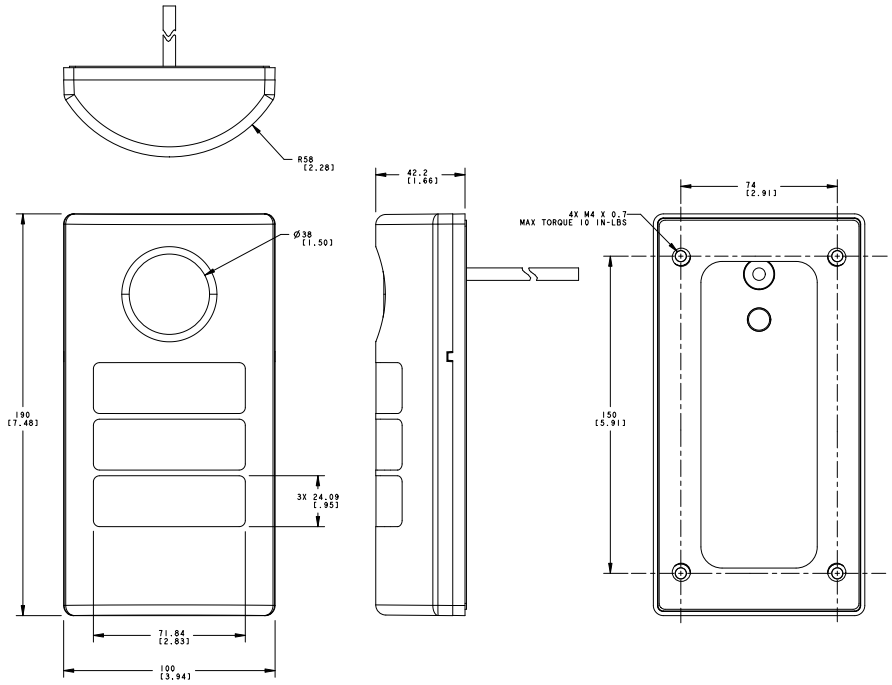

© Banner Engineering Corp. All rights reserved.
www.bannerengineering.com

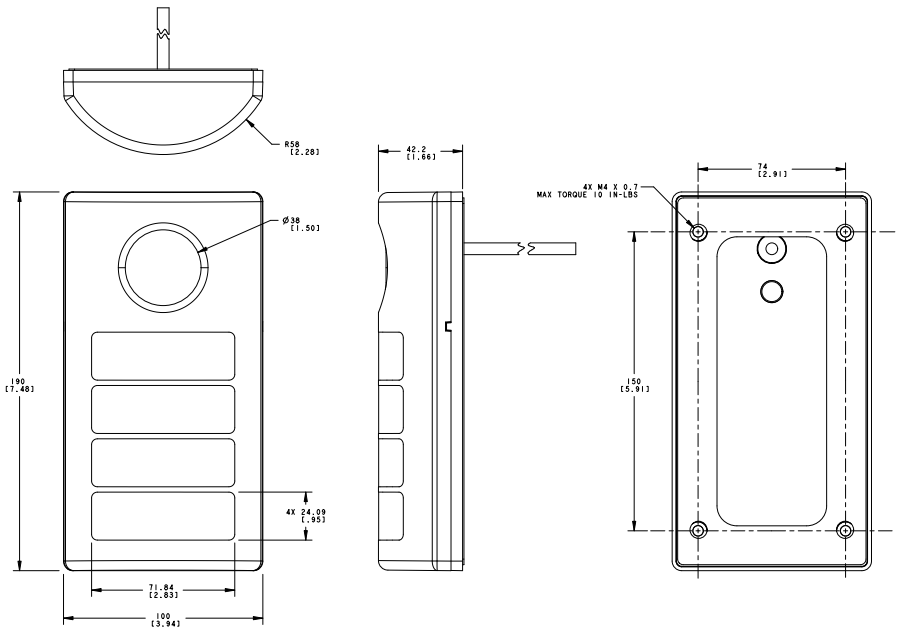

Accessories

Cordsets

4-Pin Double-Ended M12 Female to M12 Male Cordsets				
Model	**Length**	**Style**	**Dimensions**	**Pinout**
MQDEC-401SS	0.31 m (1 ft)	Male Straight/Female Straight	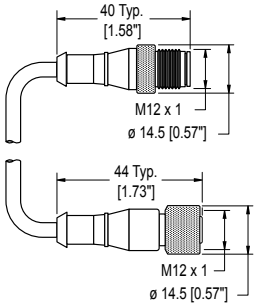	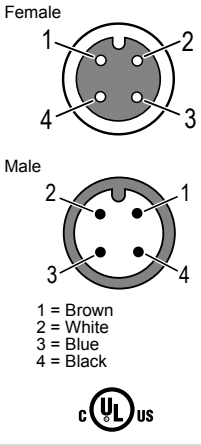
MQDEC-403SS	0.91 m (2.99 ft)			
MQDEC-406SS	1.83 m (6 ft)			
MQDEC-412SS	3.66 m (12 ft)			
MQDEC-415SS	4.58 m (15 ft)			
MQDEC-420SS	6.10 m (20 ft)			
MQDEC-430SS	9.14 m (30.2 ft)			
MQDEC-450SS	15.2 m (49.9 ft)			

Mounting Bracket

All measurements are listed in millimeters [inches], unless noted otherwise. The measurements provided are subject to change.

SMBTLF100F

- Right-angle
- S bracket
- Mounting hardware included
- CAD Files: DXF, PDF, IGS, STP

Hole center spacing: 26.5
Hole Size: A = 16.6 × 9.4, B = 10.5 × 4.5

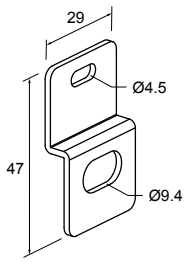

© Banner Engineering Corp. All rights reserved.
www.bannerengineering.com

Banner Engineering Corp Limited Warranty

Banner Engineering Corp. warrants its products to be free from defects in material and workmanship for one year following the date of shipment. Banner Engineering Corp. will repair or replace, free of charge, any product of its manufacture which, at the time it is returned to the factory, is found to have been defective during the warranty period. This warranty does not cover damage or liability for misuse, abuse, or the improper application or installation of the Banner product.

THIS LIMITED WARRANTY IS EXCLUSIVE AND IN LIEU OF ALL OTHER WARRANTIES WHETHER EXPRESS OR IMPLIED (INCLUDING, WITHOUT LIMITATION, ANY WARRANTY OF MERCHANTABILITY OR FITNESS FOR A PARTICULAR PURPOSE), AND WHETHER ARISING UNDER COURSE OF PERFORMANCE, COURSE OF DEALING OR TRADE USAGE.

This Warranty is exclusive and limited to repair or, at the discretion of Banner Engineering Corp., replacement. **IN NO EVENT SHALL BANNER ENGINEERING CORP. BE LIABLE TO BUYER OR ANY OTHER PERSON OR ENTITY FOR ANY EXTRA COSTS, EXPENSES, LOSSES, LOSS OF PROFITS, OR ANY INCIDENTAL, CONSEQUENTIAL OR SPECIAL DAMAGES RESULTING FROM ANY PRODUCT DEFECT OR FROM THE USE OR INABILITY TO USE THE PRODUCT, WHETHER ARISING IN CONTRACT OR WARRANTY, STATUTE, TORT, STRICT LIABILITY, NEGLIGENCE, OR OTHERWISE.**

Banner Engineering Corp. reserves the right to change, modify or improve the design of the product without assuming any obligations or liabilities relating to any product previously manufactured by Banner Engineering Corp. Any misuse, abuse, or improper application or installation of this product or use of the product for personal protection applications when the product is identified as not intended for such purposes will void the product warranty. Any modifications to this product without prior express approval by Banner Engineering Corp will void the product warranties. All specifications published in this document are subject to change; Banner reserves the right to modify product specifications or update documentation at any time. Specifications and product information in English supersede that which is provided in any other language. For the most recent version of any documentation, refer to: www.bannerengineering.com.

For patent information, see www.bannerengineering.com/patents.

© Banner Engineering Corp. All rights reserved.
www.bannerengineering.com