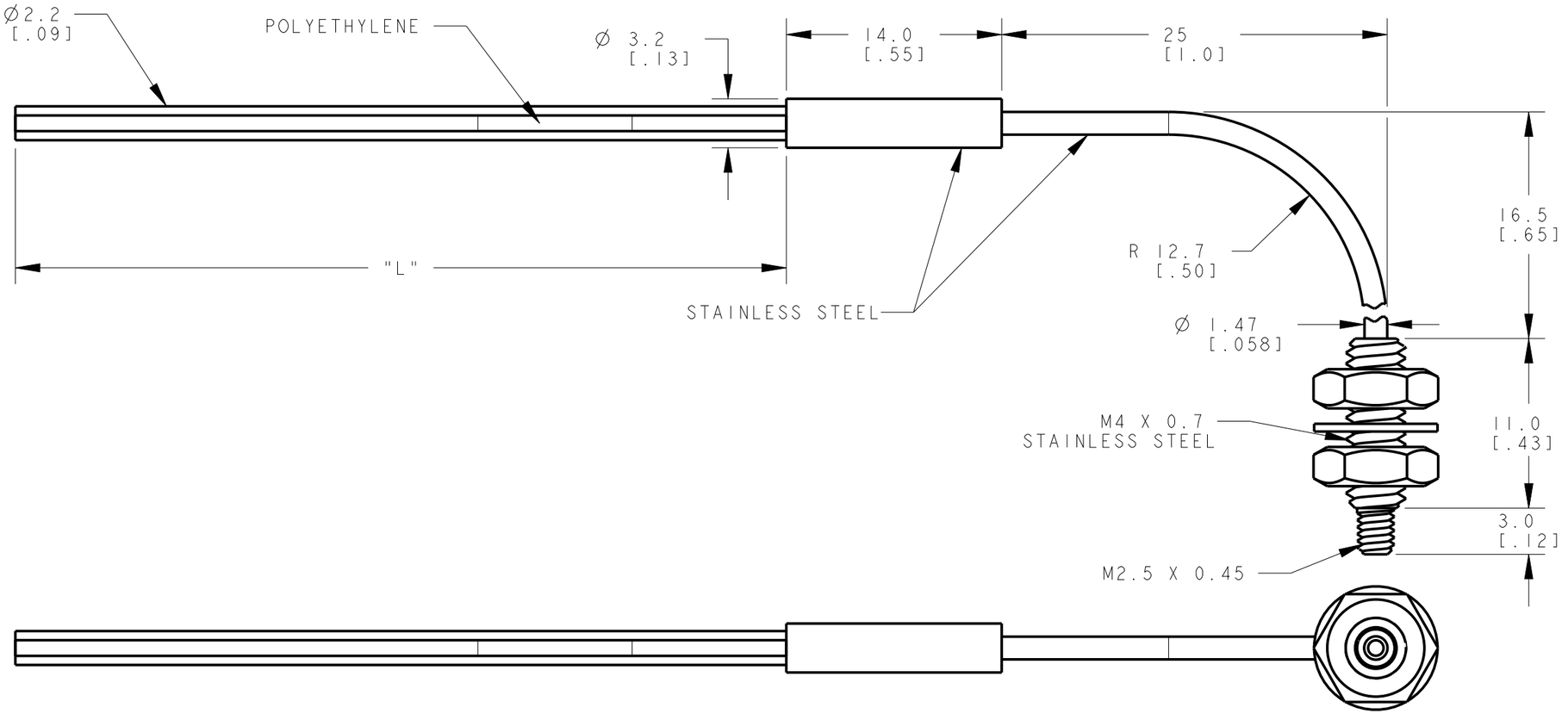

MODEL NO.	"L"	P/N
PIAT415U	4572 [180]	56081
PIAT440U	12192 [480]	48050
PIAT430U	10000 [394]	48010
PIAT420U	6100 [240]	42854
PIAT46U	2000 [79]	27336

NOTE:

1. HARDENED STAINLESS STEEL TUBING ON ANGLED END IS NOT BENDABLE.

NOTES:
1. ALL DIMENSIONS ARE MILLIMETERS [INCHES] UNLESS OTHERWISE NOTED.
2. REFER TO "www.bannerengineering.com" FOR ADDITIONAL DATA AND SPECIFICATIONS.

This drawing is the property of BANNER ENGINEERING CORP. Any use or reproduction, in any form, without prior written permission of Banner is prohibited.
© Banner Engineering Corp.

THIRD ANGLE PROJECTION

BANNER ENGINEERING CORP.
www.bannerengineering.com

TITLE

PIAT4 SERIES UNTERMINATED

SIZE	DRAWING NO.	REV.
B	161895	A
SCALE 3:1	SHEET 1 OF 1	

CREO

ПРОМЭЛЕКТРОНИКА/ sales@prom-elec.com