Features

Multicolor Indicator with Optional Audible Alarm for Indoor or Outdoor Use



- Industrial beacon provides bright indication for OEMs and users that need visible status information
- Ex/HazLoc approvals for potentially explosive environment applications
- Rugged construction provides years of uninterrupted operation
- Unique water-shed beacon design helps protect the indicator
- Fourteen colors in one device
- 36 mm threaded polycarbonate base
- Rugged IP69K per ISO 20653, UL Type 4X housing
- Variety of connector options
- Rugged UV-stabilized polycarbonate base and window
- 100 V AC to 240 V AC operating voltage
- IK08 impact rating for maximum protection demanding applications

Models

Standard models are shown. Contact the factory for other options.

Family	Style	Type	Classification	Voltage	Colors	Audible	Connector *
K100	P	L	N	Z	RGB7	A	Q
	P = Pro	L = Indicator	N = Haz Area (Class I Div 2)	Z = AC	RGB7 = RGB Multicolor	Blank = None A = Audible	Blank = 2 m integral ITC-ER PVC cable Q = 5-pin integral 1/2 in. 20 UNF male quick disconnect **

* Models with a quick disconnect require a mating cordset
** Must be enclosed with a protected conduit or a suitable enclosure

Installation Instructions

Ex/HazLoc Applications

WARNING:
- **Explosive Atmospheres/Hazardous Locations**
- It is the user's responsibility to ensure that all local, state, and national laws, rules, codes, or regulations relating to the installation and use of this device in any particular application are satisfied. This device must be installed by a Qualified Person[(1)], in accordance with this document and applicable regulations.

WARNING:
- **Explosion Hazard**
- Do not disconnect equipment unless the power has been switched off or the area is known to be non-hazardous.

WARNING:
- **Electrostatic Discharge (ESD) Specific Conditions for Safe Use**
- Parts of the enclosure are non-conducting and can generate an ignition-capable level of ESD.
- To reduce the risk of ignition due to electrostatic discharge, avoid contact with the equipment while an explosive atmosphere is present.
- Clean the equipment with only a damp cloth.

(1) A Qualified Person is a person who, by possession of a recognized degree or certificate of professional training, or who, by extensive knowledge, training and experience, has successfully demonstrated the ability to solve problems relating to the subject matter and work.

Original Instructions
02-Sep-25

© Banner Engineering Corp. All rights reserved.
www.bannerengineering.com

231074
p/n: 231074 Rev. B

ПРОМЭЛЕКТРОНИКА/ sales@prom-elec.com

Specific Conditions for Use and General Notes

- See Specifications and Wiring Diagrams for important information concerning entity parameters, permissible locations, electrical connections and certifications.
- In addition to the warning above concerning user responsibility, the installation must comply with the following:
  - All installations must comply with all manufacturer's instructions.
  - All applicable wiring methods in accordance with the relevant local regulations and the authority having jurisdiction.
  - U.S. Installations: The relevant requirements of the National Electric Code® (ANSI/NFPA-70 NEC®).
  - Canadian Installations: The relevant requirements of the Canadian Electrical Code (CSA C22.1).
  - ATEX / IECEx Installations: The relevant requirements of EN IEC 60079-14 and applicable National regulations.
- Do not attempt any repairs to this device; it contains no field-replaceable parts or components. Tampering and/or replacement with non-factory components may adversely affect the safe use of the system.
- The nonconducting materials of this device may be susceptible to ignition-capable level of electrostatic charging and precautions must be taken to avoid this. The user/installer shall ensure that the equipment is not installed in a location where it may be subjected to external conditions (such as high-pressure steam) which are conducive to creating a build-up of electrostatic charges.
- Clean with a damp cloth only.
- If the equipment is likely to come into contact with aggressive substances[2], then it is the responsibility of the user to take suitable precautions[3] that prevent it from being adversely affected, thus ensuring that the type of protection is not compromised.
- The ingress protection (IP rating) of enclosures/panels may be invalidated by the installation of the beacon. The installation of the beacon in a particular enclosure/panel is subject to the evaluation/acceptance of the authority having jurisdiction.
- Models with integral quick-disconnect (QD) connectors:
  Use recommended Banner cordsets (see "Cordsets" on page 5), or suitable quick-disconnect cordsets with threaded retaining nut (see"Specifications" on page 3). The cordset must be securely fastened using the quick-disconnect retaining nut to prevent disconnection. Maximum connector torque: 6 ft-lbs.

  - Must be installed such that the connector is protected from impact and unauthorized disconnection. The method of protection can include conduit (e.g. pole, pendent), enclosed raceway, a listed enclosure suitable for the intended use, and/or by inaccessible location that excludes possible impact damage.
- ATEX / IECEx Installations; additional specific conditions of use
  - The Beacon shall only be installed in areas with low risk of mechanical impact.
  - Transient protection shall be provided at a level not exceeding 140% of the peak rated voltage at the supply terminals of the Beacon.
  - For Zone 2: When the equipment is mounted to an external enclosure, the external enclosure shall be rated ATEX/IECEx Zone 2 IP54 minimum, in accordance with IEC/EN 60079-0. To maintain the IP64 rating for the overall assembly of beacon and external enclosure, the external enclosure and any fittings used must be rated IP64 minimum.
  - For Zone 22: When the equipment is mounted to an external enclosure, the external enclosure shall be rated ATEX/IECEx Zone 22 IP64 minimum, in accordance with IEC/EN 60079-0 and IEC/EN 60079-31.
- U.S. / Canadian Zone Installations; additional specific conditions of use
  - Only non-audible K100 Pro Beacon models with 2 m integral cable.
  - The Beacon shall only be installed in areas with low risk of mechanical impact.
  - Transient protection shall be provided at a level not exceeding 140% of the peak rated voltage at the supply terminals of the Beacon.
  - The beacons must be mounted to a conduit/standoff pipe or on an external enclosure. The K100 beacons must be installed on the conduit/standoff pipe or external enclosure in a way that ensures all field wiring is fully contained within the conduit/standoff pipe or external enclosure.
    - For Zone 2: When the beacon is mounted to an external enclosure, the external enclosure shall be rated Zone 2 IP54 minimum, in accordance with UL/CSA 60079-0. To maintain the IP64 rating for the overall assembly of beacon and external enclosure, the external enclosure and any fittings used must be rated IP64 minimum.
    - For Zone 22: When the beacon is mounted to an external enclosure, the external enclosure shall be rated Zone 22 IP64 minimum, in accordance with UL/CSA 60079-0 and UL/CSA 60079-31.

Wiring

Diagram	Key
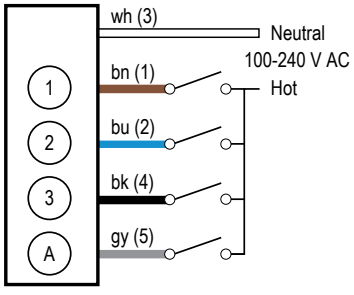	1 = Brown 2 = Blue 3 = White 4 = Black 5 = Gray

An "X" denotes an active input.

[2] Aggressive substances—for example, acidic liquids or gases that may attack metals, or solvents that may affect polymeric materials.
[3] Suitable precaution—for example, regular checks as part of routine inspections or establishing from the materials data sheet that is resistant to specific chemicals.

© Banner Engineering Corp. All rights reserved.
www.bannerengineering.com

For example: When the black wire and the white wire are both active, the indicator will be Magenta Steady.

Default Configuration

Wiring				Operating Mode/Function	
Brown	Blue	Black	Gray	Non-Audible	Audible
X				Red Steady	Red Steady
	X			Green Steady	Green Steady
		X		Blue Steady	Blue Steady
X	X			Yellow Steady	Yellow Steady
X		X		Magenta Steady	Magenta Steady
	X	X		Cyan Steady	Cyan Steady
X	X	X		White Steady	White Steady
			X	Off	Audible Steady, Frequency 2.5 KHz, Volume High
X			X	Red Steady	Red Steady, Audible Steady, Frequency 2.5 KHz, Volume High
	X		X	Green Steady	Green Steady, Audible Steady, Frequency 2.5 KHz, Volume High
		X	X	Blue Steady	Blue Steady, Audible Steady, Frequency 2.5 KHz, Volume High
X	X		X	Yellow Steady	Yellow Steady, Audible Steady, Frequency 2.5 KHz, Volume High
X		X	X	Magenta Steady	Magenta Steady, Audible Steady, Frequency 2.5 KHz, Volume High
	X	X	X	Cyan Steady	Cyan Steady, Audible Steady, Frequency 2.5 KHz, Volume High
X	X	X	X	White Steady	White Steady, Audible Steady, Frequency 2.5 KHz, Volume High

Specifications

Supply Protection Circuitry

Protected against reverse polarity and transient voltages

Leakage Current Immunity

400 µA

Application Note: The use of relay output PLC is recommended since there is no leakage current. Solid state output PLCs often have leakage current above 1 mA and, therefore, turn the light on in the off state. To counteract the leakage current, a shunt resistor must be used. A resistor must be applied from the neutral wire of the device to the hot wire of each channel of the device.

Indicator Response Time

On Response: 350 ms (maximum)

Off Response: 20 ms (maximum)

Connections

Integral 5-pin 1/2 in. 20UNF male quick-disconnect connector or 2 m (6.5 ft) integral ITC-ER PVC-jacketed cable, depending on model

Models with a quick disconnect require a mating cordset

Connecting 5-pin M12 quick-disconnect cordsets (see "Cordsets" on page 5): Female single-ended Multiconductor cable (at minimum): UL Style 2517, 24 AWG wire, rated ≥ 80 °C; M12 quick-disconnect connector: per IEC 61076-2-101, must have threaded M12 x 1 retaining nut

Construction

Base, Dome, and Nut: Polycarbonate

LED Lifetime

Lumen maintenance L_{70}

When operating within specifications, output decreases less than 30% after 42,000 hours

Mounting

M36 by 2.0 threaded base, maximum torque 5.0 N·m (44 inch-lbf)

Interior 3/4-14 NPT Thread

Mounting nut included

Adjacent Unit Mounting Separation Distance

Minimum: 0 in (mounted with unit flanges touching)

Approvals

NEC and CEC (cULus)

- Gas and Vapors: Class I Div 2 Groups ABCD T4
- Dust and Fibers/flyings: Class II Div 2 Groups FG T6; Class III Div 1 and Div 2 T6

Maximum Input Power

Light Only: 7.0 W

Light and Audible: 9.7 W

Audible Characteristics

Sound Intensity at 2.5 KHz, at 1 m (typical):

Low volume setting: 93 dB
Medium volume setting: 96 dB
High volume setting: 101 dB

Operating Conditions

–40 °C to +60 °C (–40 °F to +140 °F)

90% at +50 °C maximum relative humidity (non-condensing)

Storage Temperature: –40 °C to +70 °C (–40 °F to +158 °F)

Vibration and Mechanical Shock

Meets IEC 60068-2-6 requirements (Vibration: 10 Hz to 55 Hz, 1.0 mm amplitude, 5 minutes sweep, 30 minutes dwell)

Meets IEC 60068-2-27 requirements (Shock: 30G 11 ms duration, half sine wave)

Impact: IK08 (IEC 60068-2-75)

Environmental Rating

IP66, IP69K per ISO 20653, UL Type 4X

Certifications

c UL us LISTED

E530817

© Banner Engineering Corp. All rights reserved.
www.bannerengineering.com

Supply Voltage and Current

100 V AC to 240 V AC, 50 Hz to 60 Hz

Maximum current (mA AC at 60 HZ):

Voltage	Light Only	Light & Audible
100	102	112
230	68	70

Internal temperature compensation circuitry: Reduces the Lumen Output to decrease the unit's internal operating temperature. The amount of reduction is dependent on the ambient operating temperature, supply voltage, color, and/or audible functions being utilized.

Indicator Characteristics

Color	Dominant Wavelength (nm) or Color Temperature (CCT)	Color Coordinates[4]		Lumen Output (Typical at 25 °C)
		x	y	
Red	620 nm	0.6900	0.3081	36
Green	525 nm	0.1620	0.7112	73
Blue	468 nm	0.1400	0.0539	14
Yellow	575 nm	0.4780	0.4700	91
Magenta	-	0.3877	0.1817	47
Cyan	492 nm	0.1666	0.3406	83
White	6000K	0.3379	0.3380	112
Amber	590 nm	0.5566	0.4098	63
Rose	-	0.5234	0.2310	39
Lime Green	562 nm	0.3987	0.5306	99
Orange	600 nm	0.6135	0.3665	50
Sky Blue	485 nm	0.1483	0.2476	87
Violet	-	0.2148	0.0938	28
Spring Green	507 nm	0.1780	0.5375	77

[4] Refer to CIE 1931 chromaticity diagram or color chart, to show equivalent color with indicated color coordinates.

Required Overcurrent Protection



WARNING: Electrical connections must be made by qualified personnel in accordance with local and national electrical codes and regulations.

Overcurrent protection is required to be provided by end product application per the supplied table.

Overcurrent protection may be provided with external fusing or via Current Limiting, Class 2 Power Supply.

Supply wiring leads < 24 AWG shall not be spliced.

For additional product support, go to www.bannerengineering.com.

Supply Wiring (AWG)	Required Overcurrent Protection (A)	Supply Wiring (AWG)	Required Overcurrent Protection (A)
20	5.0	26	1.0
22	3.0	28	0.8
24	2.0	30	0.5

© Banner Engineering Corp. All rights reserved.
www.bannerengineering.com

Dimensions

All measurements are listed in millimeters [inches], unless noted otherwise. The measurements provided are subject to change.

Standard Models	Audible Models
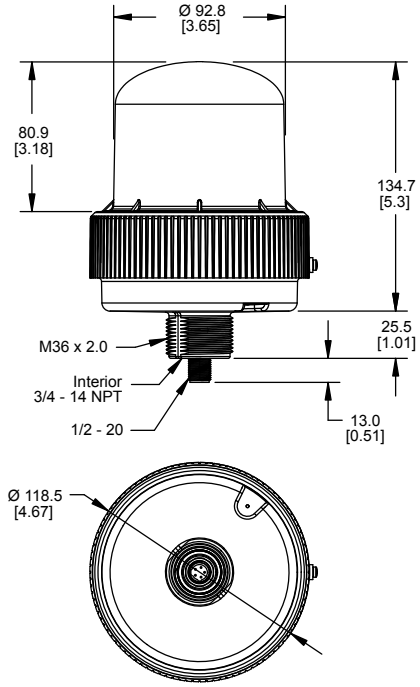	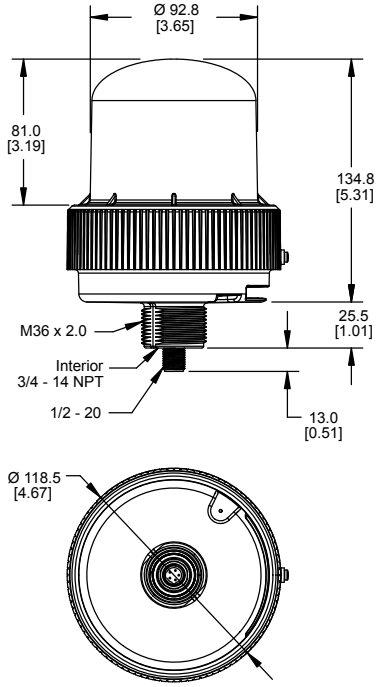

Accessories

Cordsets

All measurements are listed in millimeters, unless noted otherwise. The measurements provided are subject to change.

5-Pin Single-Ended 1/2-in Dual Key Female Cordsets				
Model	**Length**	**Style**	**Dimensions**	**Pinout (Female)**
MQAC2-506	2 m (6.56 ft)	Straight	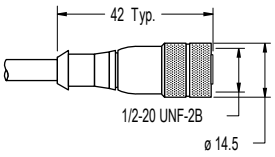	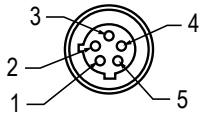
MQAC2-515	5 m (16.4 ft)			
MQAC2-530	9.14 m (30 ft)			

1 = Brown
2 = Blue
3 = White
4 = Black
5 = Gray

Brackets

LMB36RA

- Indicator light right-angle mounting
- 36 mm mounting hole
- Stainless steel

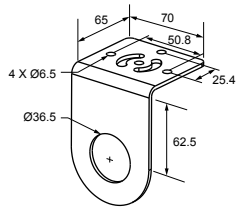

© Banner Engineering Corp. All rights reserved.
www.bannerengineering.com

Elevated Mount System

Elevated Mount System (1/2" Pipes)

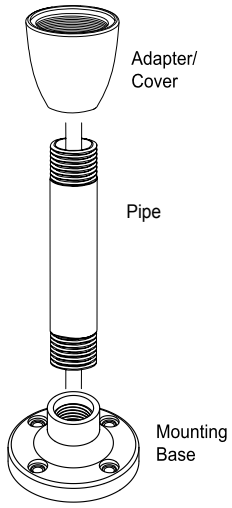

Adapter/Cover Model	Description
SA-M36E12	• Adapter from M36 thread to ½-14 NPSM thread • Streamlined black plastic mounting base adapter/cover • Drilled hole

Black Anodized Aluminum, ½ in. NPT Pipe Models	Clear Anodized Aluminum, ½ in. NPT Pipe Models	Description
SOP-E12-150A, 150 mm (6 in) long	**SOP-E12-150AC**, 150 mm (6 in) long	• Elevated-use stand-off pipe • Threaded at both ends • Compatible with most industrial environments
SOP-E12-300A, 300 mm (12 in) long	**SOP-E12-300AC**, 300 mm (12 in) long	
SOP-E12-600A, 600 mm (24 in) long	-	
SOP-E12-900A, 900 mm (36 in) long	**SOP-E12-900AC**, 900 mm (36 in) long	

Mounting Base Model	Description
SA-F12	• Elevated-use stand-off pipes (½ in, NPSM/DN15) • M5 mounting hardware and nitrile gasket included • Die-cast zinc base with black paint

Elevated Mount System (3/4" Pipes)

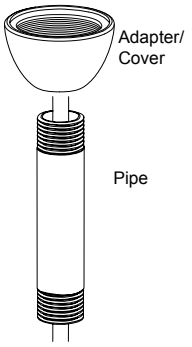

Adapter/Cover Model	Description
SA-M36SOP	• M36 thread adapter with clearance for ¾ pipe mount • Streamlined black plastic mounting base adapter/cover • Drilled hole

Black Anodized Aluminum, ¾ in. NPT Pipe Models	Description
SOP-E34-150A, 150 mm (6 in) long	• Elevated-use stand-off pipe • Threaded at both ends • Compatible with most industrial environments
SOP-E34-300A, 300 mm (12 in) long	
SOP-E34-600A, 600 mm (24 in) long	
SOP-E34-900A, 900 mm (36 in) long	

Banner Engineering Corp Limited Warranty

Banner Engineering Corp. warrants its products to be free from defects in material and workmanship for one year following the date of shipment. Banner Engineering Corp. will repair or replace, free of charge, any product of its manufacture which, at the time it is returned to the factory, is found to have been defective during the warranty period. This warranty does not cover damage or liability for misuse, abuse, or the improper application or installation of the Banner product.

THIS LIMITED WARRANTY IS EXCLUSIVE AND IN LIEU OF ALL OTHER WARRANTIES WHETHER EXPRESS OR IMPLIED (INCLUDING, WITHOUT LIMITATION, ANY WARRANTY OF MERCHANTABILITY OR FITNESS FOR A PARTICULAR PURPOSE), AND WHETHER ARISING UNDER COURSE OF PERFORMANCE, COURSE OF DEALING OR TRADE USAGE.

This Warranty is exclusive and limited to repair or, at the discretion of Banner Engineering Corp., replacement. **IN NO EVENT SHALL BANNER ENGINEERING CORP. BE LIABLE TO BUYER OR ANY OTHER PERSON OR ENTITY FOR ANY EXTRA COSTS, EXPENSES, LOSSES, LOSS OF PROFITS, OR ANY INCIDENTAL, CONSEQUENTIAL OR SPECIAL DAMAGES RESULTING FROM ANY PRODUCT DEFECT OR FROM THE USE OR INABILITY TO USE THE PRODUCT, WHETHER ARISING IN CONTRACT OR WARRANTY, STATUTE, TORT, STRICT LIABILITY, NEGLIGENCE, OR OTHERWISE.**

Banner Engineering Corp. reserves the right to change, modify or improve the design of the product without assuming any obligations or liabilities relating to any product previously manufactured by Banner Engineering Corp. Any misuse, abuse, or improper application or installation of this product or use of the product for personal protection applications when the product is identified as not intended for such purposes will void the product warranty. Any modifications to this product without prior express approval by Banner Engineering Corp will void the product warranties. All specifications published in this document are subject to change; Banner reserves the right to modify product specifications or update documentation at any time. Specifications and product information in English supersede that which is provided in any other language. For the most recent version of any documentation, refer to: www.bannerengineering.com.

For patent information, see www.bannerengineering.com/patents.

© Banner Engineering Corp. All rights reserved.
www.bannerengineering.com