MODEL NO.	"L"	P/N
PBP46UM.5	2000 [79]	27576
PBP412UM.5	3600 [142]	36481
PBP415UM.5	5000 [197]	51777

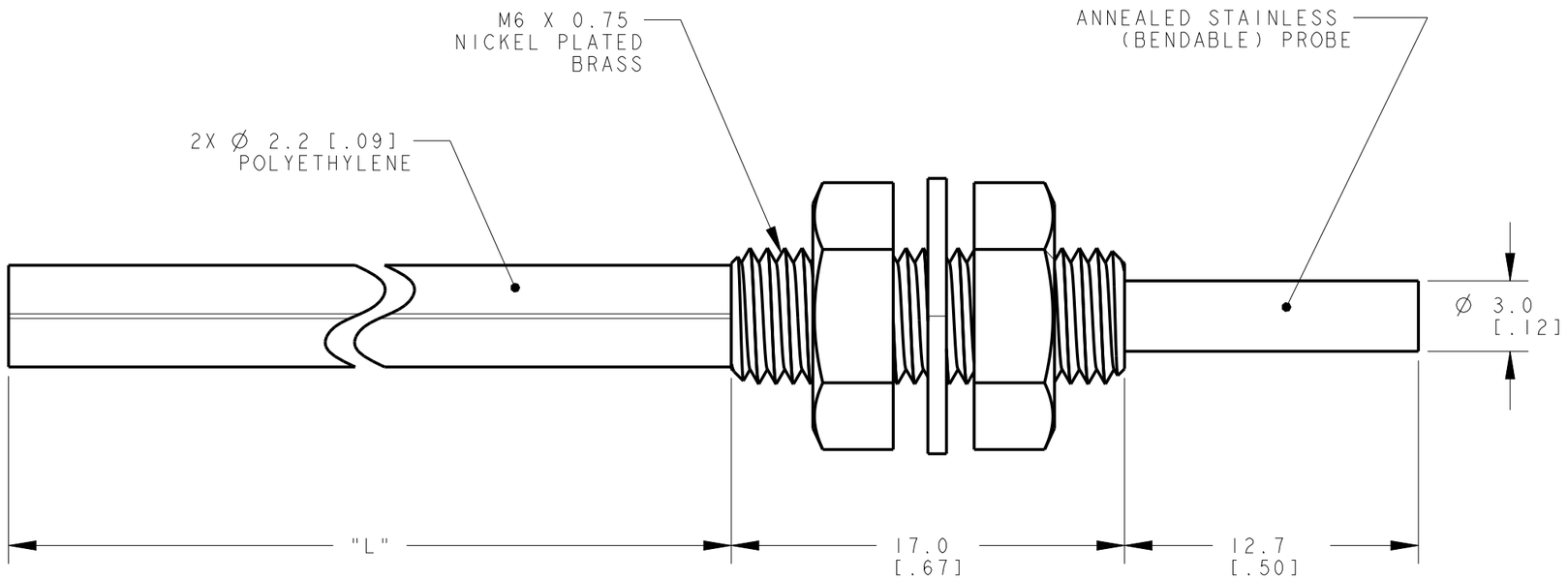

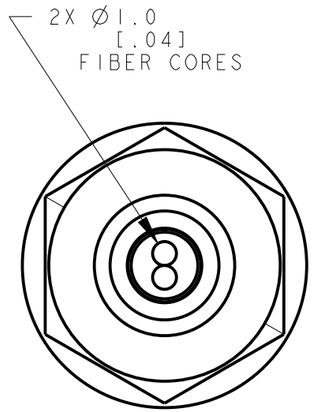

NOTES:
1. ALL DIMENSIONS ARE MILLIMETERS [INCHES] UNLESS OTHERWISE NOTED.
2. REFER TO "www.bannerengineering.com" FOR ADDITIONAL DATA AND SPECIFICATIONS.

This drawing is the property of BANNER ENGINEERING CORP. Any use or reproduction, in any form, without prior written permission of Banner is prohibited.
© 2015 Banner Engineering Corp.

THIRD ANGLE PROJECTION

BANNER ENGINEERING CORP.
www.bannerengineering.com

TITLE
PBP4 PROBE LENGTH .5 UNTERMINATED

SIZE	DRAWING NO.	REV.
B	193991	A

SCALE 4:1 | SHEET 1 OF 1

CREO

ПРОМЭЛЕКТРОНИКА/ sales@prom-elec.com