DEK100 MultiHop Server Quick Start Guide

Introduction

The DEK100 MultiHop Server provides all the benefits of Banner's trusted wireless Modbus radio network and field-wired input/output capability with the necessary components for remote deployment.

This Quick Start Guide describes the basic steps to assemble and configure the DEK100 MultiHop Server. For a more detailed description of how to configure the DXM Server, please see the DXM100-Sx Wireless Modbus Server Instruction Manual (p/n 188231) at www.bannerengineering.com.

Complete the Enclosure Assembly

Follow these steps to install the cord grips and complete the enclosure assembly.

1. Unpack the included cord grips, vent, and mounting feet.
2. Install the cord grips within the predrilled cutouts at the enclosure's bottom. Hand-tighten the nut of each cord grip carefully to avoid stripping across the threads.
    a. Place the vent below the battery to ensure proper ventilation.
    b. Insert the remaining three-cable cord grips into the half-inch size cutout locations.
    c. Install the smallest cable gland (for use with the solar cable or single-ended cordset) into the corresponding cutout.
3. Fasten the four mounting feet to the predrilled holes on the back of the enclosure using the included self-tapping screws.

The DXM Server comes with the internal tape antenna installed and connected. If your deployment requires a remotely located external antenna, disconnect the tape antenna and install the included right-angle SMA adapter on the antenna connection port (ANT).

Set up the MultiHop Network

Follow these steps to set up and install the wireless MulitHop network.

1. Connect any applicable sensors to the DXM server by feeding all cabling for the connected sensors through the installed cord grips. For a list of the available I/O, refer to the datasheet for your specific DXM100-Sx model.
2. Apply power to all devices (see "Apply Power to the DXM Server" on page 1).
3. Use the LCD menu to configure the DXM100-Sx as a Server or Repeater (see "Configure the DXM for Server or Repeater Mode" on page 2).
4. Use the LCD menu to attribute a Modbus ID to the I/O board of the DXM server (see "Configure Modbus IDs for the DXM Server IO Board" on page 2).
5. Form the wireless network by binding the Server and Repeater radios to the Client radio (see "Bind the DXM Servers and Repeaters to Form a Network" on page 2).
6. Observe the LED behavior to verify the devices are communicating with each other (see "Server and Repeater LED Behavior" on page 3).
7. Configure any I/O points to use the sensors connected to the wireless devices (see "Configure the IO Board Using the LCD" on page 3).
8. Conduct a prescreen site survey between MultiHop radios (see "Conduct a Site Survey task" on page 4).
9. Install your wireless sensor network components (see "Install Your MultiHop Devices" on page 5).
10. Conduct a final site survey between MultiHop radios.

Apply Power to the DXM Server

Connecting power to the communication pins of the DXM server will cause permanent damage. The power for connected sensors can be supplied by the DXM server's Px terminals for courtesy power or from the 12 V DC to 30 V DC used to power the DXM server.

Pin	Description
1	No connection
2	PW. 12 to 30 V DC input or solar panel connection (+)
3, 5, 8, 17, 26, 29	GD. Main logic Ground for the DXM server
4	B+. Backup battery positive input. Battery voltage must be less than 15 V DC. Use only a sealed lead acid (SLA) battery or lithium ferrophosphate (LFP) battery.

When using a DC power supply, feed the power cable through the small cord grip, then wire the ground lead to the DXM server's main GD terminal and the positive lead to the DXM server's main PW terminal. After the device has powered on, go to **System › Charger › ChargePwr** within the LCD menu system and set the **ChargePwr** mode to **DC**.

Original Instructions
10-Jan-25

© Banner Engineering Corp. All rights reserved.

244035
p/n: 244035 Rev. A

ПРОМЭЛЕКТРОНИКА/ sales@prom-elec.com

When using a solar panel with backup battery; feed the solar cable through the small cord grip, then wire the negative lead of the solar panel to the DXM server's main GD terminal and the positive lead to the DXM server's main PW terminal. Wire the negative lead of the battery to a GD terminal of the DXM server and wire the positive lead of the battery to the B+ terminal of the DXM server. After the device has powered on, go to **System › Charger › ChargePwr** within the LCD menu system and set the **ChargePwr** mode to **Solar**.

Configure the DXM for Server or Repeater Mode

A MultiHop radio network must consist of at least one Client radio and one Server or Repeater radio. The Client radios can be configured as described in the manuals for the MultiHop models of the DXM100-BxRx, DXM150-BxRx, DXM700-BxRx, DXM1200-BxRx, and DXM1200-X2Rx controllers.

The DIP switches for the I/O board and ISM radio of the DXM server are set by the factory to allow the device to be configured using the LCD menu screen. For other DIP switch configurations, refer to the product's datasheet.

The DEK Servers can be configured as servers or repeaters using the LCD menu system.

1. On the LCD, use the arrow keys to select the **Radio** menu and press **ENTER**.
2. Allow the device to read information from the radio, then use the arrow keys to select **Setup** and press **ENTER**.
3. Use the arrow keys to select **RadioMode** and press **ENTER**.
4. Allow the device to read information from the radio, then use the arrow keys to change the radio mode to **Server** or **Repeater**. Press **ENTER** to update the setting.
    - A radio in **Server** mode operates as a traditional Modbus server by supplying information per request from the Modbus client.
    - A radio in **Repeater** mode operates simultaneously as a Modbus server and forwards data from subordinate servers to the Modbus client. A radio in Repeater mode has higher power consumption as it must transmit more frequently. This additional power consumption must be considered when operating these devices in a solar/battery application (e.g. size of solar panel and battery).
5. After the mode has been updated, press the **BACK** button until you return to the main menu.

Configure Modbus IDs for the DXM Server IO Board

The DXM server contains two boards: a MultiHop ISM radio board and an I/O base board. The I/O board must have a unique Modbus ID to access the I/O register data and configuration data.

By default, the I/O board's Modbus ID is 11. To change the Modbus ID, use the LCD menu and follow these steps:

1. Use the arrow keys to select **System**, then press **ENTER**.
2. Use the arrow keys to select **Device**, then press **ENTER**.
3. Select **Modbus ID**, then press **ENTER**.
4. Use the arrow keys to select a Modbus ID of 11-247, then press **ENTER** to update the setting.
5. Press the **BACK** button to return to the previous menu.
6. Repeat this process for the I/O board of all DXM servers within the MultiHop network, verifying each I/O board is assigned a unique Modbus ID.

Bind the DXM Servers and Repeaters to Form a Network

The DXM server contains two boards: a MultiHop ISM radio board and an I/O base board. The ISM radio generally has a Modbus ID assigned to it by the client radio during the binding process.

By default, the radio board's Modbus ID is set to one (1). When binding multiple server/repeater radios to the client radio, Banner Engineering recommends beginning with Modbus ID 1 and incrementing the Modbus ID with each additional radio bound to the network.

To bind the DXM server to a DXM client radio, follow these binding instructions. For all other client radio types, please refer to their respective datasheets or manuals for binding instructions.

1. Apply power to all MultiHop radios and place the MultiHop radios configured as servers or repeaters at least two meters away from the client radio.
2. Put the DXM client radio into binding mode.
    a. Use the arrow keys to select the **ISM Radio** on the LCD and press **ENTER**.
    b. Highlight the **Binding** menu and press **ENTER**.
    c. Using the arrow keys, change the **Bind to >** number by selecting a unique ISM radio board Modbus ID for the DXM server/repeater.
    d. Press **ENTER** to execute binding mode on the DXM client radio.

    The screen indicates the DXM client is in binding mode.
3. Enter binding mode on the DXM Server/Repeater radio.
    a. Use the arrow keys to select the **ISM Radio** menu on the LCD and press **ENTER**.

© Banner Engineering Corp. All rights reserved.

   b. Highlight the **Binding** option and press **ENTER**. Pressing **ENTER** on this option is equivalent to triple-clicking the binding button on other MultiHop devices.
   c. The screen indicates the server/repeater radio has **Bound** to the client radio. Press the **BACK** button until you reach the main menu of the server/repeater radio.
4. Repeat Steps 2 and 3 for as many server/repeater radios as are needed for your network. Verify each Modbus ID is unique from all other I/O or radio boards.
5. When all server/repeater radios are bound to the client, exit binding mode on the client radio by pressing the **BACK** button until you reach the main menu.

All radio devices begin to form the network and synchronize after the client radio exits binding mode.

The synchronization process enables a server/repeater radio to join the wireless network formed by the client radio. After power-up, synchronization may take a few minutes to complete. First, all radios within range of the client radio wirelessly synchronize to the master radio. These radios may be server or repeater radios.

After the repeater radios are synchronized to the client radio, any radios not in sync with the client radio but can “hear” the repeater radio will synchronize to the repeater radios. Each repeater “family” that forms a wireless network path creates another layer of synchronization process. The table below details the process of synchronization with a parent. When testing the devices before installation, verify the radio devices are at least two meters apart or the communications may fail.

Server and Repeater LED Behavior

All bound radios set to slave or repeater modes follow this LED behavior after powering up. The LEDs are located on the DXM's internal ISM radio. This behavior is also mirrored by an LED on the I/O board near the P3 terminal.

Process Steps	Response	LED
1	Power is supplied to the radio.	Solid amber
2	The server/repeater searches for a parent device.	Flashes red (1 per 3 sec)
3	A parent device is detected. The server/repeater searches for other parent radios within range.	Solid red
4	The server/repeater selects a suitable parent.	Solid amber
5	The server/repeater attempts to synchronize to the selected parent.	Solid red
6	The server/repeater is synchronized to the parent.	Flashes green
7	The server/repeater enters RUN mode.	Solid green, then flashes green
	Serial data packets begin transmitting between the server/repeater and its parent radio.	Flashes amber

Configure the IO Board Using the LCD

On the DXM Server, use the **Registers** submenus to view the input values, output values, input counter values, SDI-12 input values, and the charger status.

To change the configuration parameters, use the **System** submenus. Basic configuration of the DXM Server can be conducted using the menu system via the LCD, however, the DXM server can also be configured by writing and reading from Modbus registers using the client radio. Please refer to the DXM100-Sx Wireless Modbus Server Instruction Manual (pn 188231) for more detailed information.

When using the LCD menu system, use the up and down arrows to navigate the menus. Use the **ENTER** key to select parameters, and use the up and down arrows to change parameter values.

DXM100-Sx System Configuration Menu

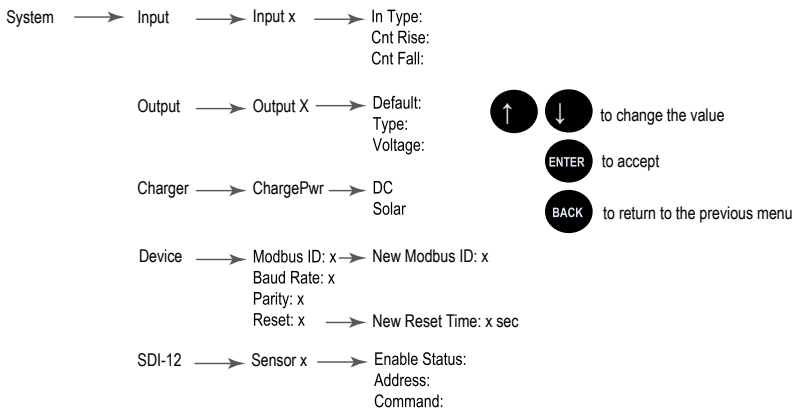

© Banner Engineering Corp. All rights reserved.

Inputs
Use the **Inputs** menu to change the input settings:

1. Go to the **System › Input** menu and click **ENTER**.
2. Select the input to change and click **ENTER**.
3. Select the input type. The available parameters include the **Input Type**, **Counter Rise**, and **Counter Fall**.

To use an input as a synchronous counter, configure the input as a discrete NPN/PNP input. For example, **Input 1** is mapped to **Counter 1** when it has been configured as **NPN/PNP** input with **Cnt Rise** or **Cnt Fall** enabled. All other inputs are mapped to their respective counters when configured in this manner.

Outputs
Use the **Outputs** menu to change the default condition, output type, and switched power voltage.

1. Go to the **System › Output** menu.
2. Select the output to change.
3. Set the appropriate parameters. Available parameters include **Default**, **Voltage**, and **Output Type**.

Charger
Use the **Charger** menu to change the charging algorithm for the battery.

1. Go to the **System › Charger** menu and click **ENTER**.
2. Select the charging algorithm for the DXM server. Available parameters are **DC** and **Solar**.

Device
Use the **Device** menu to change the Modbus ID of the I/O board and reset parameters for the DXM server.

1. Go to the **System › Device** menu and click **ENTER**.
2. Select **Modbus ID** and click **ENTER** to adjust and update the ID number of the I/O board within the Modbus network.
3. Change the **Baud Rate** and **Parity** settings using the MultiHop Configuration Software.
4. To **Reset** the DXM Server, select **Reset** and click **ENTER**. Use the up and down arrow buttons to enter a time delay value, then press **ENTER** to execute the function.

SDI-12
Use the **SDI-12** menu to adjust the parameters for SDI-12 sensors.

1. Go to the **System › SDI-12** menu and click **ENTER**.
2. Select the **Sensor** and click **ENTER** to configure.
3. Change the **Enabled/Disabled**, **Device Address** (0-9), and **M!** or **C!** command parameters.

Conduct a Site Survey task

A site survey analyzes the radio signal between a MultiHop child radio and its parent, then reports the number of data packets missed or received at relative signal strengths.

Perform the site survey before permanently installing your network to prescreen a site for its radio communication potential, compare link quality in different locations, or assist with final antenna placement and aiming.

For the DXM Servers, a site survey must be conducted at the client radio. A client radio is always the parent and the server radios are always children radios within the radio communication relationship. A DXM Server in repeater mode may be both a child radio to the client or another repeater radio and act as the parent radio to other repeater or server radios.

Other radios bound within the same network remain synchronized to the network, but are blocked from sending data while the site survey is running. The site survey analyzes the signal strength between the selected child and its parent radio only. Disable site survey on one radio before initiating it for another.

Follow these instructions to perform a site survey using a DXM client. For all other client radio types, please refer to their respective datasheets or manuals for site survey instructions.

1. On the DXM client: Use the arrow keys to select the **ISM Radio** menu and press **ENTER**.
2. Select the **Site Survey** menu and press **ENTER**.
3. Use the arrow keys to select the Modbus ID number of the child radio and press **ENTER** to run the site survey with that radio. The site survey results appear on the screen after the DXM client has transmitted packets to and from the selected server/repeater.
4. When you are finished running the site survey, press **BACK** twice to return to the main menu and exit site survey mode.
5. Repeat this process for each child radio in the MultiHop network.

The site survey report sorts data into one of four categories: Green, Yellow, Red, or Missed Packets.

- Green indicates strong signal.
- Yellow is less strong but still robust.

© Banner Engineering Corp. All rights reserved.

- Red means the packet was received but has a margin of less than 15 dB
- A Missed packet means the data did not arrive or contained a checksum error.

(During normal operation, missed packets are retried until they are received without errors.)

For applications with only a few hops, the system can tolerate up to 40% missed packets without serious degradation, but situations with more missed packets should be reviewed for proper antenna selection and placement, cabling, and transmit power levels. If your application includes many hops, modify the installation and antenna placement to reduce the missed packet count.

If the site survey fails (100 missed packets), verify the radios are at least 2 meters from the DXM client and/or rerun the binding procedure. If you find poor signal quality, common solutions include moving the DXM client to a more central location relative to the DXM server/repeaters or using higher-gain antennas on the radio devices. Contact your local Banner Engineering representative for assistance.

Install Your MultiHop Devices

Refer to the MultiHop Data Radio Instruction Manual (pn 151317) for details about successfully installing your wireless network components. See the sections regarding mounting options, clear path communication, remote antennas, antenna heights, seasonal changes, and weatherproofing.

If you have chosen to use a solar panel with a backup battery, refer to the *Working with Solar Power* section of the DXM100-Sx Wireless Modbus Server Instruction Manual (pn 188231).

MultiHop Configuration Software

Use Banner's MultiHop Configuration Software to view your MultiHop radio network and configure the radio and its I/O.

MultiHop Configuration Software Network and Device Overview screen

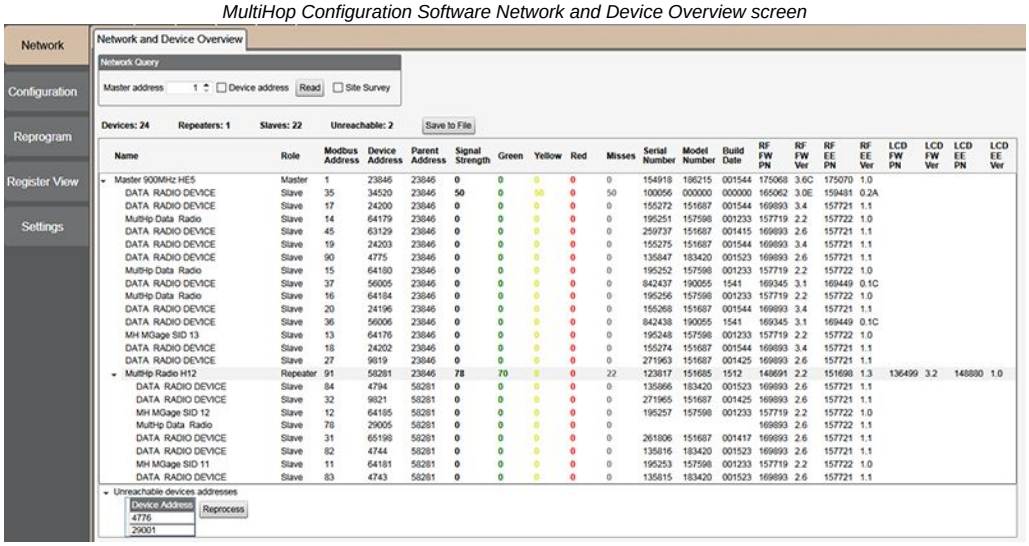

The software connects to a MultiHop client radio using one of four methods.

- Serial; using a USB to RS-485 (for RS-485 radios) or a USB to RS-232 (for RS-232 radios) converter cable.
- Modbus TCP; using an Ethernet connection to an Ethernet radio client.
- Serial DXM; using a USB cable to a DXM Controller to access a MultiHop client radio.
- TCP DXM: using an Ethernet connection to a DXM Controller to access a MultiHop client radio.

Banner recommends using **BWA-UCT-900**, an RS-485 to USB adapter cable with a wall plug that can power your radio while you configure it. The adapter cable is not required when connecting to a DXM Controller.

Download the most recent software revision from the Wireless Reference Library on Banner Engineering's website: www.bannerengineering.com.

© Banner Engineering Corp. All rights reserved.

Dimensions

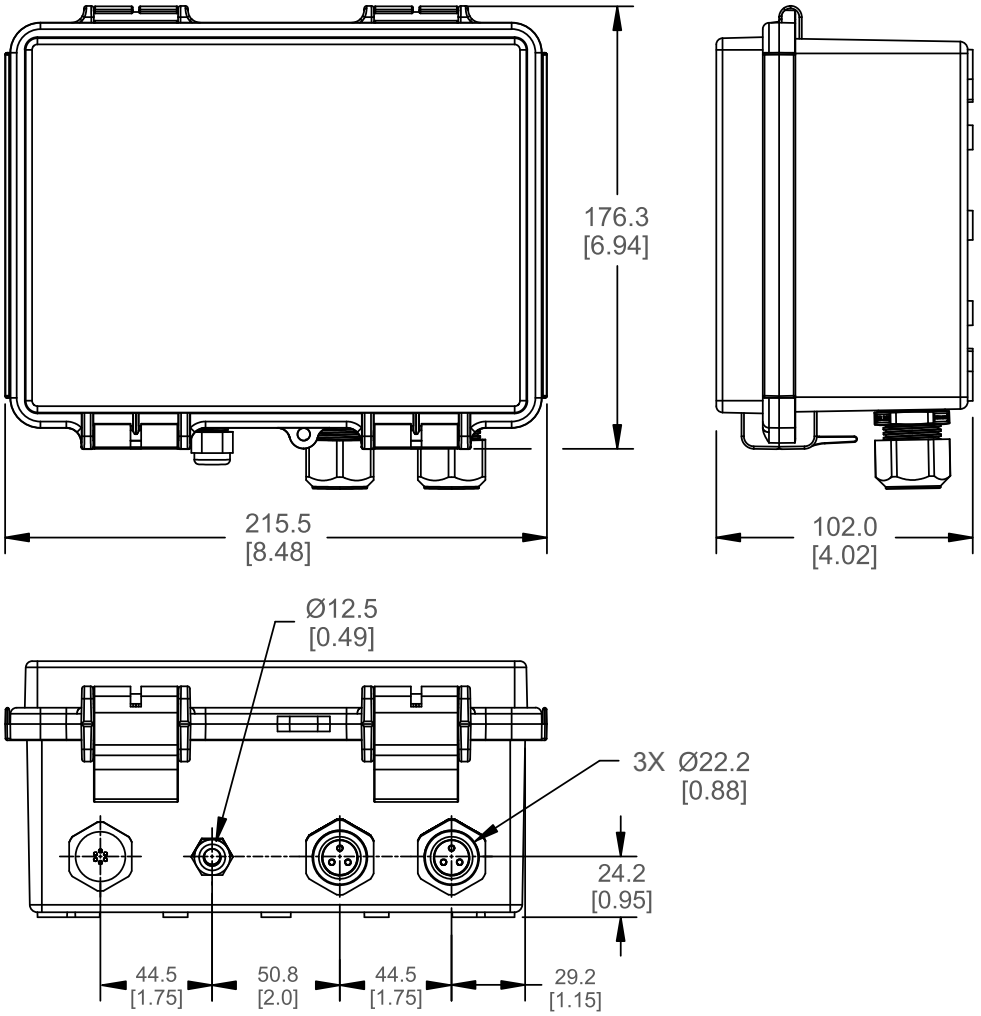

Warnings

WARNING:

- **Do not use this device for personnel protection**
- Using this device for personnel protection could result in serious injury or death.
- This device does not include the self-checking redundant circuitry necessary to allow its use in personnel safety applications. A device failure or malfunction can cause either an energized (on) or de-energized (off) output condition.

IMPORTANT: Please download the complete DEK100 MultiHop Server technical documentation, available in multiple languages, from www.bannerengineering.com for details on the proper use, applications, Warnings, and installation instructions of this device.

IMPORTANT: Por favor descargue desde www.bannerengineering.com toda la documentación técnica de los DEK100 MultiHop Server, disponibles en múltiples idiomas, para detalles del uso adecuado, aplicaciones, advertencias, y las instrucciones de instalación de estos dispositivos.

IMPORTANT: Veuillez télécharger la documentation technique complète des DEK100 MultiHop Server sur notre site www.bannerengineering.com pour les détails sur leur utilisation correcte, les applications, les notes de sécurité et les instructions de montage.

Install and properly ground a qualified surge suppressor when installing a remote antenna system. Remote antenna configurations installed without surge suppressors invalidate the manufacturer's warranty. Keep the ground wire as short as possible and make all ground connections to a single-point ground system to ensure no ground loops are created. No surge suppressor can absorb all lightning strikes; do not touch the Sure Cross® device or any equipment connected to the Sure Cross® device during a thunderstorm.

Exporting Sure Cross® Radios. It is our intent to fully comply with all national and regional regulations regarding radio frequency emissions. **Customers who want to re-export this product to a country other than that to which it was sold must ensure the device is approved in the destination country.** The Sure Cross wireless products were certified for use in these countries using the antenna that ships with the product. When using other antennas, verify you are not exceeding the transmit power levels allowed by local governing agencies. This device has been designed to operate with the antennas listed on Banner Engineering's website and having a maximum gain of 9 dBm. Antennas not included in this list or having a gain greater than 9 dBm

© Banner Engineering Corp. All rights reserved.

are strictly prohibited for use with this device. The required antenna impedance is 50 ohms. To reduce potential radio interference to other users, the antenna type and its gain should be so chosen such that the equivalent isotropically radiated power (EIRP) is not more than that permitted for successful communication. Consult with Banner Engineering Corp. if the destination country is not on this list.

IMPORTANT:

- **Never operate a radio without connecting an antenna**
- Operating radios without an antenna connected will damage the radio circuitry.
- To avoid damaging the radio circuitry, never apply power to a Sure Cross® Performance or Sure Cross® MultiHop radio without an antenna connected.

IMPORTANT:

- **Electrostatic discharge (ESD) sensitive device**
- ESD can damage the device. Damage from inappropriate handling is not covered by warranty.
- Use proper handling procedures to prevent ESD damage. Proper handling procedures include leaving devices in their anti-static packaging until ready for use; wearing anti-static wrist straps; and assembling units on a grounded, static-dissipative surface.

Banner Engineering Corp Limited Warranty

Banner Engineering Corp. warrants its products to be free from defects in material and workmanship for one year following the date of shipment. Banner Engineering Corp. will repair or replace, free of charge, any product of its manufacture which, at the time it is returned to the factory, is found to have been defective during the warranty period. This warranty does not cover damage or liability for misuse, abuse, or the improper application or installation of the Banner product.

THIS LIMITED WARRANTY IS EXCLUSIVE AND IN LIEU OF ALL OTHER WARRANTIES WHETHER EXPRESS OR IMPLIED (INCLUDING, WITHOUT LIMITATION, ANY WARRANTY OF MERCHANTABILITY OR FITNESS FOR A PARTICULAR PURPOSE), AND WHETHER ARISING UNDER COURSE OF PERFORMANCE, COURSE OF DEALING OR TRADE USAGE.

This Warranty is exclusive and limited to repair or, at the discretion of Banner Engineering Corp., replacement. **IN NO EVENT SHALL BANNER ENGINEERING CORP. BE LIABLE TO BUYER OR ANY OTHER PERSON OR ENTITY FOR ANY EXTRA COSTS, EXPENSES, LOSSES, LOSS OF PROFITS, OR ANY INCIDENTAL, CONSEQUENTIAL OR SPECIAL DAMAGES RESULTING FROM ANY PRODUCT DEFECT OR FROM THE USE OR INABILITY TO USE THE PRODUCT, WHETHER ARISING IN CONTRACT OR WARRANTY, STATUTE, TORT, STRICT LIABILITY, NEGLIGENCE, OR OTHERWISE.**

Banner Engineering Corp. reserves the right to change, modify or improve the design of the product without assuming any obligations or liabilities relating to any product previously manufactured by Banner Engineering Corp. Any misuse, abuse, or improper application or installation of this product or use of the product for personal protection applications when the product is identified as not intended for such purposes will void the product warranty. Any modifications to this product without prior express approval by Banner Engineering Corp will void the product warranties. All specifications published in this document are subject to change; Banner reserves the right to modify product specifications or update documentation at any time. Specifications and product information in English supersede that which is provided in any other language. For the most recent version of any documentation, refer to: www.bannerengineering.com.

For patent information, see www.bannerengineering.com/patents.

© Banner Engineering Corp. All rights reserved.