Features

Preassembled Indicators for Signaling Applications



- Intense levels of light output for outdoor applications
- Controlled field of view for signage and narrow lane use
- Rugged, cost-effective, and easy-to-install
- Compact devices are completely self-contained — no controller needed
- Immune to EMI and RFI interface
- NPN or PNP input, and 15 V DC to 30 V DC, or 85 V AC to 130 V AC operation, depending on model
- One, two, or three indicators
- Sun shield included

WARNING:

- **Do not use this device for personnel protection**
- Using this device for personnel protection could result in serious injury or death.
- This device does not include the self-checking redundant circuitry necessary to allow its use in personnel safety applications. A device failure or malfunction can cause either an energized (on) or de-energized (off) output condition.

Models

Family	Color 1	Color 2	Color 3	Input[1]	Connector[2]
SP150	G	Y	R	P	Q
SP150[3] SP250 SP350	G = Green Y = Yellow R = Red B = Blue W = White Blank = Not used			P = PNP N = NPN A120 = 85 V AC to 130 V AC[4]	Q = Integral 4-pin M12 male quick-disconnect connector QP = 150 mm (6 in) PVC-jacketed cable with a 4-pin M12 male quick-disconnect connector Blank = Terminal wired

Wiring

Wiring — NPN QD Models

SP150XNQ (1-Color Models)

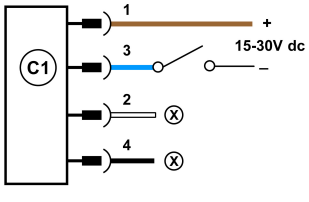

SP150XXXNQ (3-Color Models)

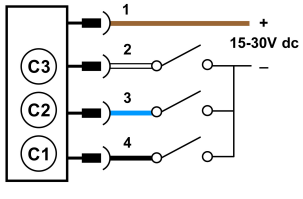

Continued on page 2

(1) Input is PNP/NPN selectable, depending on wiring.
(2) Models with a quick-disconnect connector require a mating cordset.
(3) SP150 is only available in 1- or 3-color options. SP150 1-color models are only available as PNP.
(4) A120 models are only available with a terminal-wired connection.

Original Instructions
15-Jan-26

© Banner Engineering Corp. All rights reserved.
www.bannerengineering.com

148879
p/n: 148879 Rev. F

ПРОМЭЛЕКТРОНИКА/ sales@prom-elec.com

Continued from page 1

SP250XXNQ (2-Color Models)

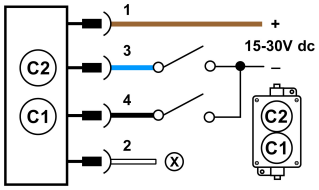

SP350XXXNQ (3-Color Models)

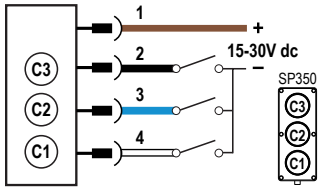

Wiring Key:
1 = Brown
2 = White
3 = Blue
4 = Black

Ⓧ indicates Not Used
C1 = Color 1
C2 = Color 2
C3 = Color 3

Wiring — PNP QD Models

SP150XPQ (1-Color Models)

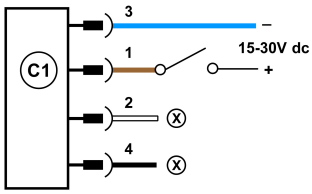

SP150XXXPQ (3-Color Models)

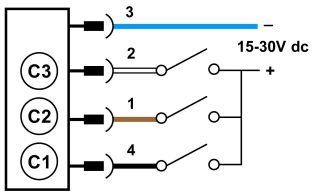

SP250XXPQ (2-Color Models)

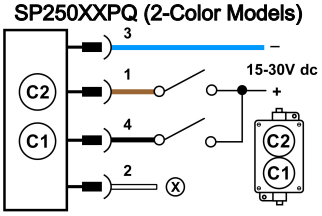

SP350XXXPQ (3-Color Models)

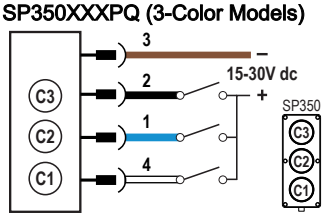

Wiring Key:
1 = Brown
2 = White
3 = Blue
4 = Black

Ⓧ indicates Not Used
C1 = Color 1
C2 = Color 2
C3 = Color 3

Wiring — NPN Terminal-Wired Models

SP150XN (1-Color Models)

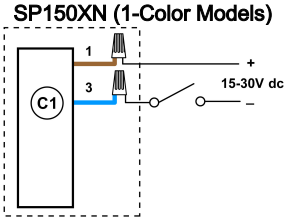

SP150XXXN (3-Color Models)

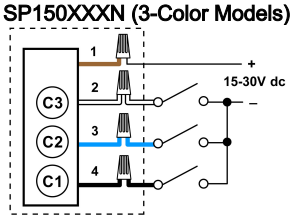

SP250XXN (2-Color Models)

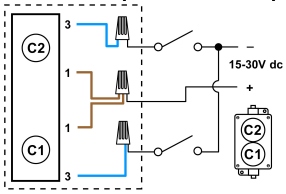

SP350XXXN (3-Color Models)

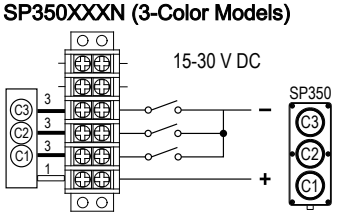

Wiring Key:
1 = Brown
2 = White
3 = Blue
4 = Black

C1 = Color 1
C2 = Color 2
C3 = Color 3

Wiring — PNP Terminal-Wired Models

SP150XP (1-Color Models)

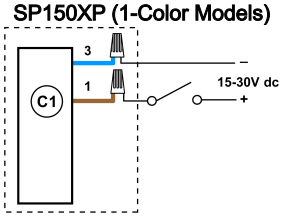

SP150XXXP (3-Color Models)

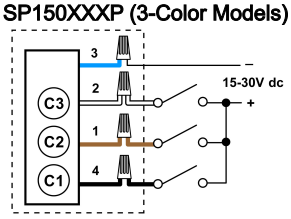

Continued on page 3

© Banner Engineering Corp. All rights reserved.
www.bannerengineering.com

Continued from page 2

SP250XXP (2-Color Models)

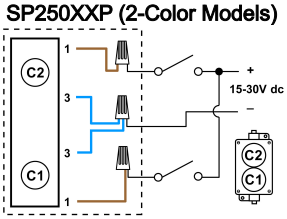

SP350XXXP (3-Color Models)

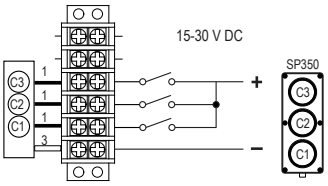

Wiring Key:
1 = Brown
2 = White
3 = Blue
4 = Black

C1 = Color 1
C2 = Color 2
C3 = Color 3

Wiring — AC Models

SP150XA120 (1-Color Models)

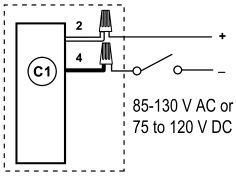

SP350XXXA120 (3-Color Models)

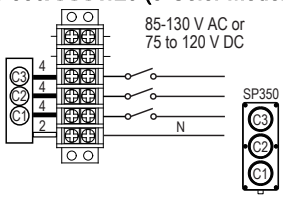

SP250XXA120 (2-Color Models)

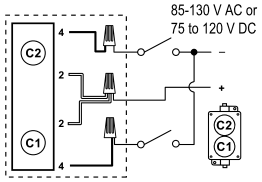

Wiring Key:
2 = White
4 = Black

C1 = Color 1
C2 = Color 2
C3 = Color 3
N = Neutral

Specifications

Supply Voltage and Current

SP150 DC Models

1-color: 15 V DC to 30 V DC at 120 mA max. per LED color
3-color: 15 V DC to 30 V DC at 40 mA max. per LED color

> **NOTE:** SP150 3-color available as DC model only

SP250/SP350 DC Models

15 V DC to 30 V DC at 120 mA max. per LED color

SP150/SP250/SP350 AC Models

85 V AC to 130 V AC, or 75 V DC to 120 V DC, at 16 mA max. per LED color

Indicators

LED colors are independently selected, depending on model

Indicator Response Time

Indicator ON/OFF: 10 ms maximum

Environmental Rating

Fully encapsulated. Terminal-wired models must have cover screws tightened and use a watertight compression fitting to meet environmental ratings.

Electronics: IP67

SP150 Enclosure: IP67

SP250 Enclosure: IP65

SP350 Enclosure: IP65

Indicator Characteristics

Color	Dominant Wavelength (nm) or Color Temperature (CCT)	Lumen Output (Typical at 25 °C)	
		SP150 (1-color), SP250, and SP350 Models	SP150 (3-color) Model
Green	520 nm to 535 nm	57	21
Red	618 nm to 630 nm	20	7
Yellow	584 nm to 594 nm	14	6
Blue	465 nm to 480 nm	12	4.5
White	4600K to 16000K	20	13

Certifications

CE

Banner Engineering BV
Park Lane, Culliganlaan 2F bus 3
1831 Diegem, BELGIUM

Construction

Polycarbonate

Operating Conditions

–40 °C to +50 °C (–40 °F to +122 °F)

© Banner Engineering Corp. All rights reserved.
www.bannerengineering.com

Percent of Maximum Intensity vs Viewing Angle

X: Viewing Angle (Degree)

Y: Intensity (Percent)

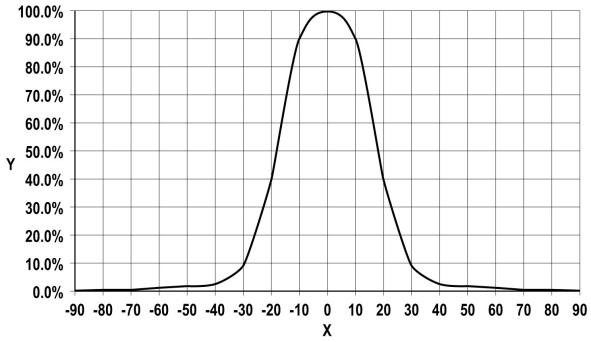

Dimensions

Dimensions — SP150 Models

All measurements are listed in millimeters [inches], unless noted otherwise. The measurements provided are subject to change.

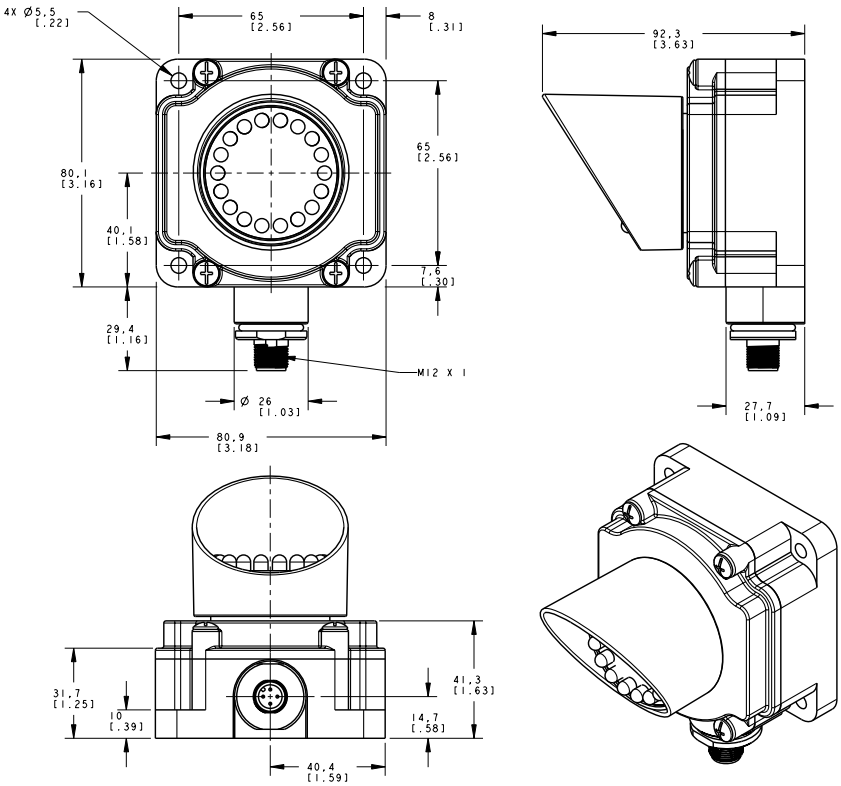

NOTE: Terminal-wired models have ½ inch NPT port in place of an M12 connector.

© Banner Engineering Corp. All rights reserved.
www.bannerengineering.com

Dimensions — SP250 Models

All measurements are listed in millimeters [inches], unless noted otherwise. The measurements provided are subject to change.

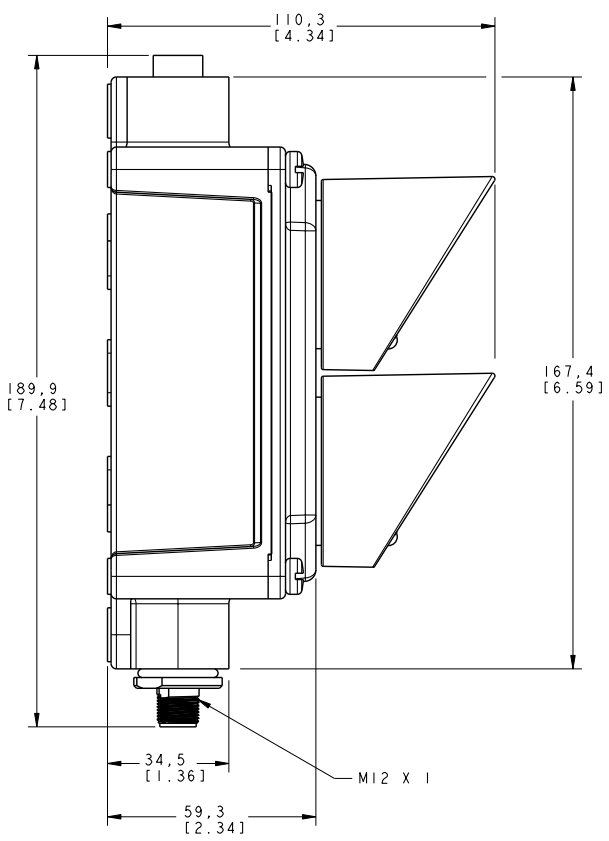

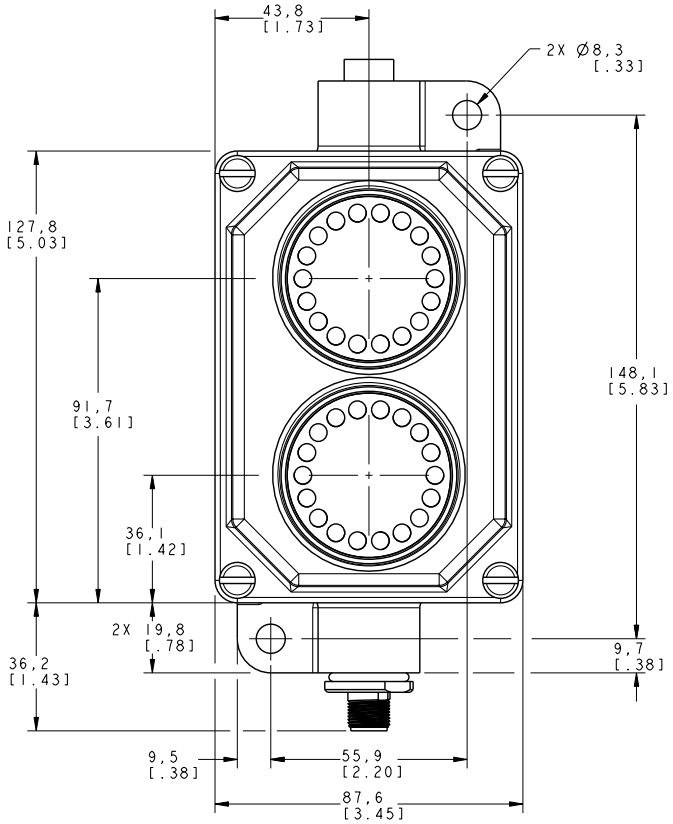

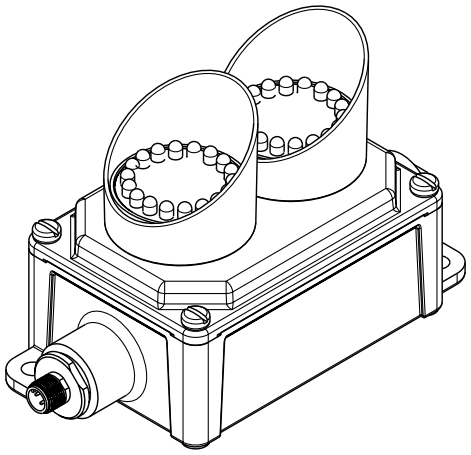

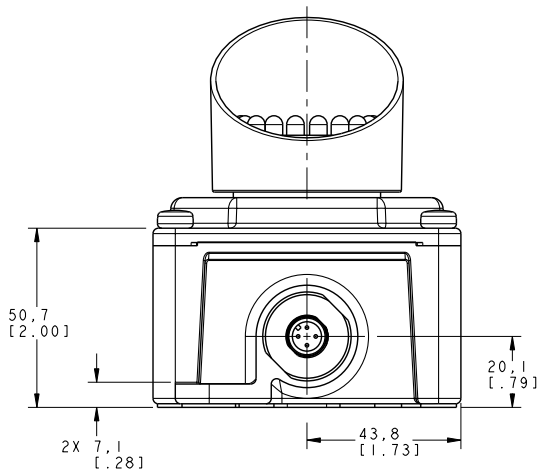

NOTE: Terminal-wired models have ½ inch NPT port in place of an M12 connector.

© Banner Engineering Corp. All rights reserved.
www.bannerengineering.com

Dimensions — SP350 Models

All measurements are listed in millimeters [inches], unless noted otherwise. The measurements provided are subject to change.

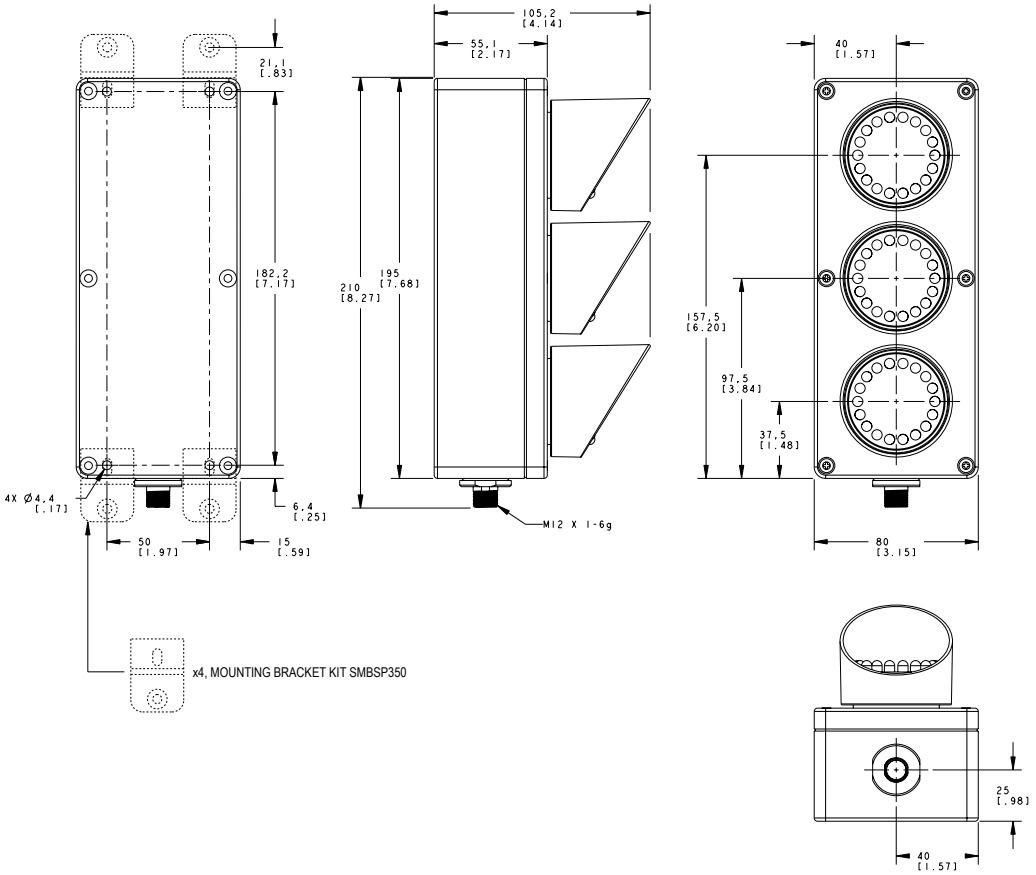

NOTE: Terminal-wired models have an access hole for ½ inch conduit fitting in place of an M12 connector. Mounting kit SMBSP350 included.

Accessories

Elevated Mount System

Pipes

Black Anodized Aluminum, ½ in. NPT Pipe Models	Clear Anodized Aluminum, ½ in. NPT Pipe Models	Description
SOP-E12-150A, 150 mm (6 in) long	**SOP-E12-150AC**, 150 mm (6 in) long	• Elevated-use stand-off pipe • Threaded at both ends • Compatible with most industrial environments • CAD Files: ◦ **SOP-E12-150A**: DXF, PDF, IGS, STP ◦ **SOP-E12-300A**: DXF, PDF, IGS, STP ◦ **SOP-E12-600A**: DXF, PDF, IGS, STP ◦ **SOP-E12-900A**: DXF, PDF, IGS, STP
SOP-E12-300A, 300 mm (12 in) long	**SOP-E12-300AC**, 300 mm (12 in) long	
SOP-E12-600A, 600 mm (24 in) long	-	
SOP-E12-900A, 900 mm (36 in) long	**SOP-E12-900AC**, 900 mm (36 in) long	

Black Anodized Aluminum, ¾ in. NPT Pipe Models	Description
SOP-E34-150A, 150 mm (6 in) long	• Elevated-use stand-off pipe • Threaded at both ends • Compatible with most industrial environments • CAD Files: ◦ **SOP-E34-150x**: DXF, PDF, IGS, STP ◦ **SOP-E34-300x**: DXF, PDF, IGS, STP ◦ **SOP-E34-600x**: DXF, PDF, IGS, STP ◦ **SOP-E34-900x**: DXF, PDF, IGS, STP
SOP-E34-300A, 300 mm (12 in) long	
SOP-E34-600A, 600 mm (24 in) long	
SOP-E34-900A, 900 mm (36 in) long	

© Banner Engineering Corp. All rights reserved.
www.bannerengineering.com

304 Stainless Steel, ½ in. NPT Pipe Models	Description
SOP-E12-150SS, 150 mm (6 in) long	• Elevated-use stand-off pipe • Threaded at both ends • Compatible with most industrial environments • CAD Files: ◦ **SOP-E12-150x**: DXF, PDF, IGS, STP ◦ **SOP-E12-300x**: DXF, PDF, IGS, STP ◦ **SOP-E12-600x**: DXF, PDF, IGS, STP ◦ **SOP-E12-900x**: DXF, PDF, IGS, STP
SOP-E12-300SS, 300 mm (12 in) long	
SOP-E12-600SS, 600 mm (24 in) long	
SOP-E12-900SS, 900 mm (36 in) long	

Bottom Covers

Mounting Base Model	Description	
SA-E12M30 - Black acetal	• Streamlined black acetal or white UHMW mounting base adapter/ cover • Adapter from ½ in. NPSM/DN15 pipe to 30 mm (1-3/16 in) drilled hole • Mounting hardware included • CAD files: DXF, PDF, IGS, STP	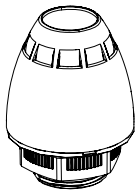
SA-E12M30C - White UHMW		

Banner Engineering Corp Limited Warranty

Banner Engineering Corp. warrants its products to be free from defects in material and workmanship for one year following the date of shipment. Banner Engineering Corp. will repair or replace, free of charge, any product of its manufacture which, at the time it is returned to the factory, is found to have been defective during the warranty period. This warranty does not cover damage or liability for misuse, abuse, or the improper application or installation of the Banner product.

THIS LIMITED WARRANTY IS EXCLUSIVE AND IN LIEU OF ALL OTHER WARRANTIES WHETHER EXPRESS OR IMPLIED (INCLUDING, WITHOUT LIMITATION, ANY WARRANTY OF MERCHANTABILITY OR FITNESS FOR A PARTICULAR PURPOSE), AND WHETHER ARISING UNDER COURSE OF PERFORMANCE, COURSE OF DEALING OR TRADE USAGE.

This Warranty is exclusive and limited to repair or, at the discretion of Banner Engineering Corp., replacement. **IN NO EVENT SHALL BANNER ENGINEERING CORP. BE LIABLE TO BUYER OR ANY OTHER PERSON OR ENTITY FOR ANY EXTRA COSTS, EXPENSES, LOSSES, LOSS OF PROFITS, OR ANY INCIDENTAL, CONSEQUENTIAL OR SPECIAL DAMAGES RESULTING FROM ANY PRODUCT DEFECT OR FROM THE USE OR INABILITY TO USE THE PRODUCT, WHETHER ARISING IN CONTRACT OR WARRANTY, STATUTE, TORT, STRICT LIABILITY, NEGLIGENCE, OR OTHERWISE.**

Banner Engineering Corp. reserves the right to change, modify or improve the design of the product without assuming any obligations or liabilities relating to any product previously manufactured by Banner Engineering Corp. Any misuse, abuse, or improper application or installation of this product or use of the product for personal protection applications when the product is identified as not intended for such purposes will void the product warranty. Any modifications to this product without prior express approval by Banner Engineering Corp will void the product warranties. All specifications published in this document are subject to change; Banner reserves the right to modify product specifications or update documentation at any time. Specifications and product information in English supersede that which is provided in any other language. For the most recent version of any documentation, refer to: www.bannerengineering.com.

For patent information, see www.bannerengineering.com/patents.

© Banner Engineering Corp. All rights reserved.
www.bannerengineering.com