MODEL NO.	"L"	"TL"	P/N
PIE43UT	1000 [39]	914 [36]	56051
PIE46UT	2000 [79]	1829 [72]	48040
PIE415UTMT6	5000 [197]	1829 [72]	54842
PIE415UT	5000 [197]	4572 [180]	61215

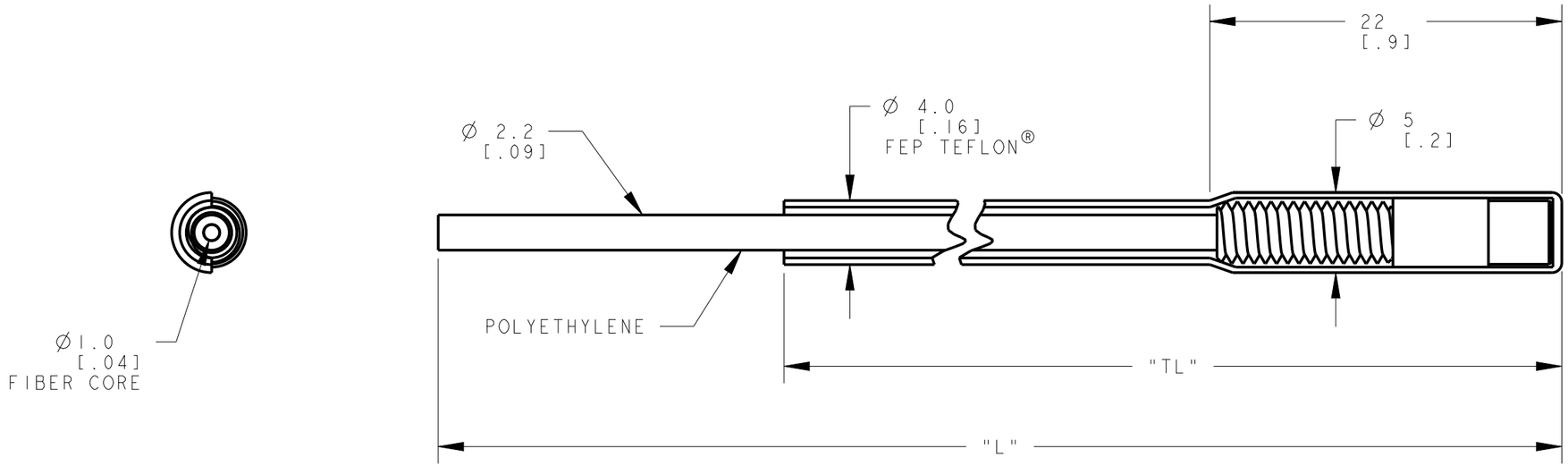

NOTES:
1. ALL DIMENSIONS ARE MILLIMETERS [INCHES] UNLESS OTHERWISE NOTED.
2. REFER TO "www.bannerengineering.com" FOR ADDITIONAL DATA AND SPECIFICATIONS.

This drawing is the property of BANNER ENGINEERING CORP. Any use or reproduction, in any form, without prior written permission of Banner is prohibited.
© 2015 Banner Engineering Corp.

THIRD ANGLE PROJECTION

BANNER ENGINEERING CORP.
www.bannerengineering.com

TITLE

PIE4 SERIES UNTERMINATED

SIZE	DRAWING NO.	REV.
B	166399	A
SCALE 3:1	SHEET 1 OF 1	

CREO

ПРОМЭЛЕКТРОНИКА/ sales@prom-elec.com