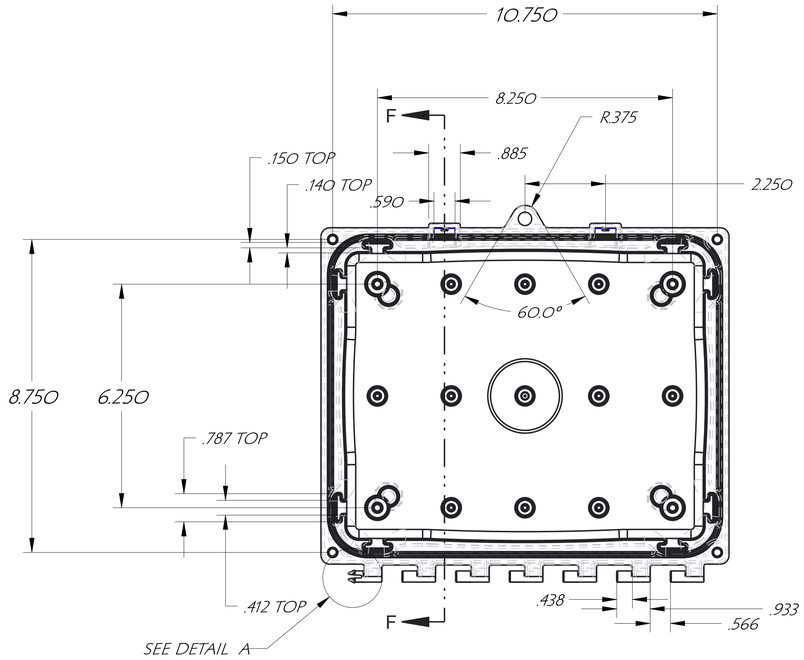

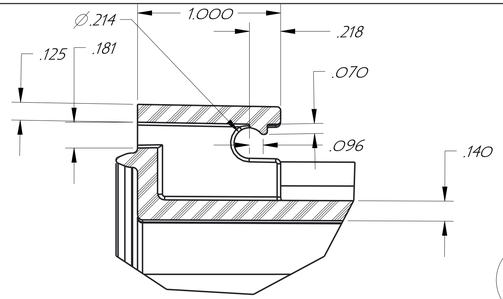

DETAIL C
SCALE 2.000

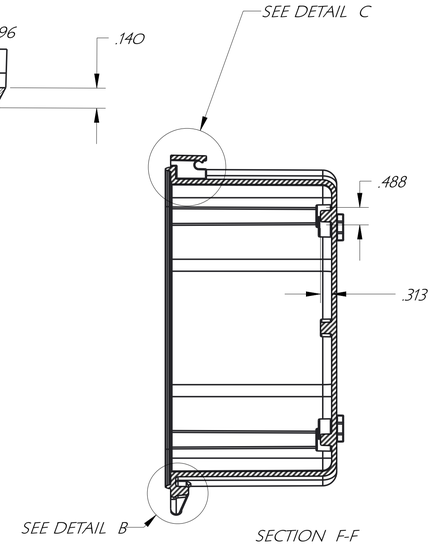

SECTION F-F

Note: Thread bosses use #10 x 3/8 Trilobular thread forming screw

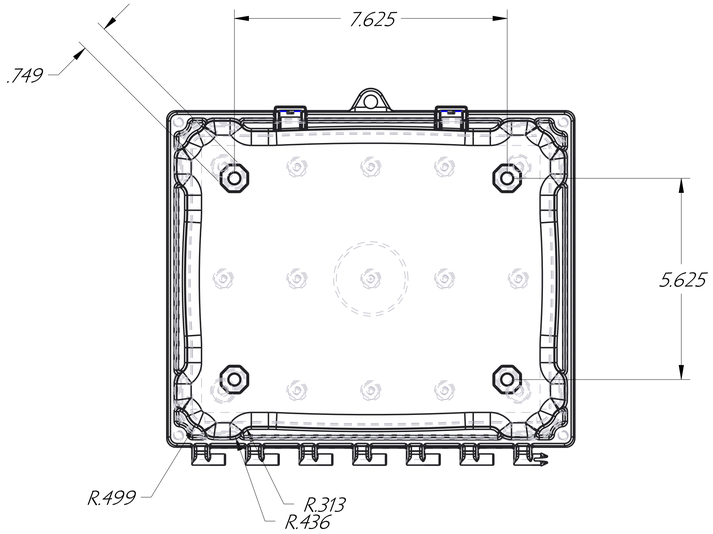

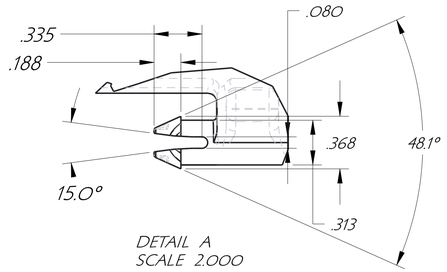

DETAIL A
SCALE 2.000

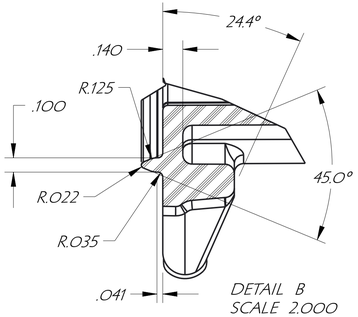

DETAIL B
SCALE 2.000

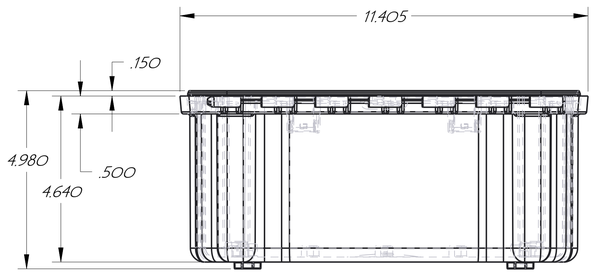

10 X 8 ENCLOSURE

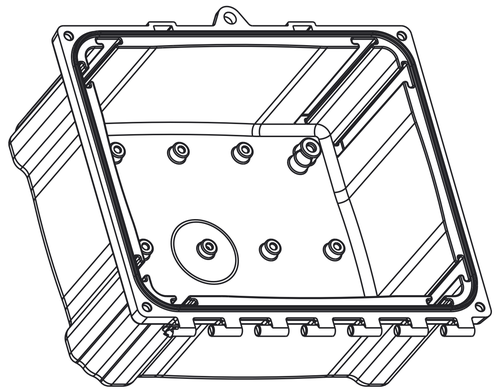

DES. C.R.W.	DRN. C.R.W.	CHKD.			
APP.	DATE 10/16/07	SCALE			
TOLERANCES:	2 PLACE DEC. ±.010	FRAC. ±1/64	ATTA BOX		CUSTOMER
UNLESS OTHERWISE SHOWN	3 PLACE DEC. ±.005		PART NAME ENCLOSURE & LID	PART NO.	PART MAT'L POLYCARBONATE
	4 PLACE DEC. ±.0005		TOOL DESC. SINGLE CAVITY INJECTION MOLD	SHRINK .006/IN.	SHEET OF

ПРОМЭЛЕКТРОНИКА/ sales@prom-elec.com

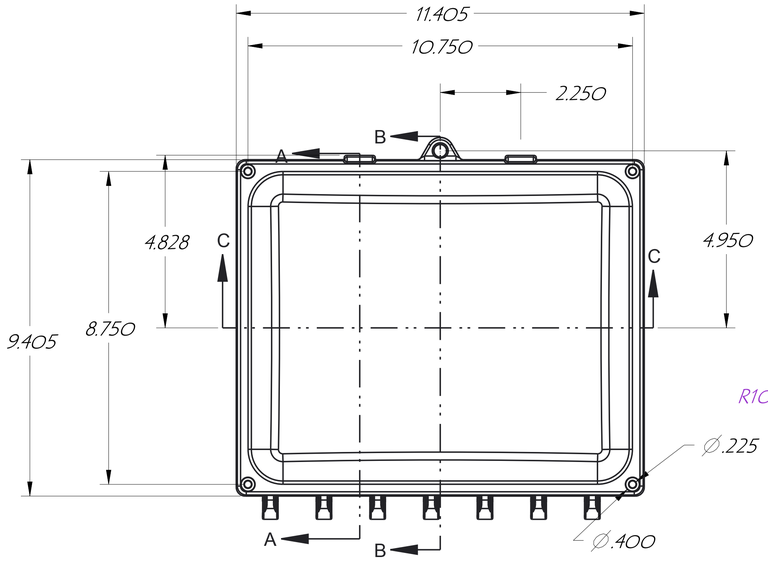

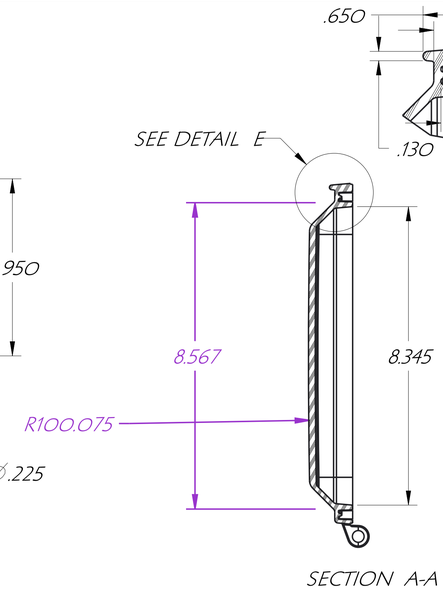

SECTION A-A

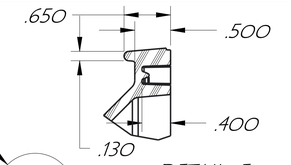

DETAIL E
SCALE 1.000

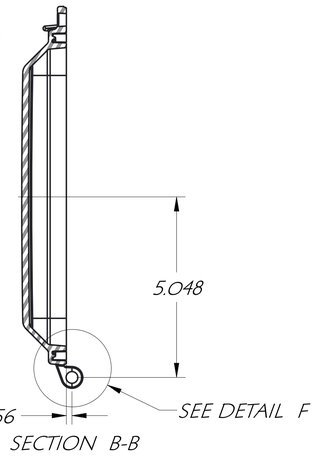

SECTION B-B

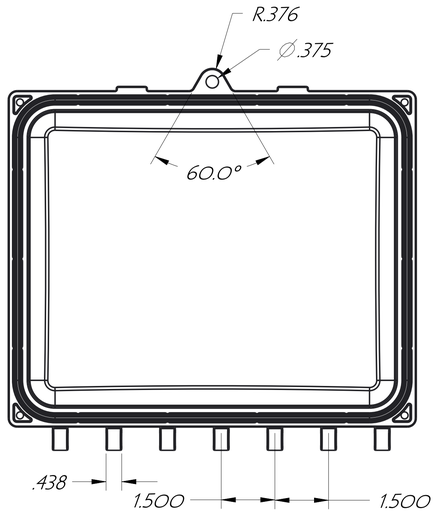

10 X 8 LID

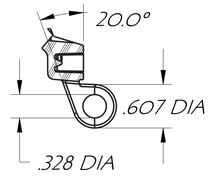

DETAIL F
SCALE 1.000

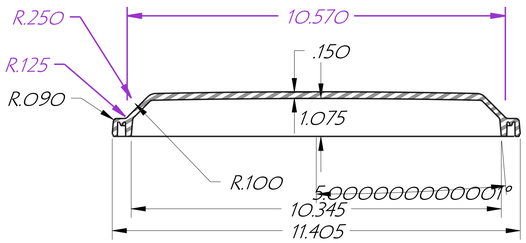

SECTION C-C

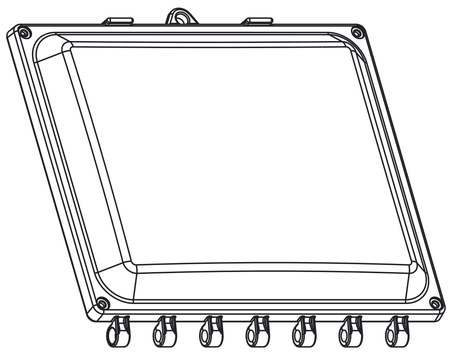

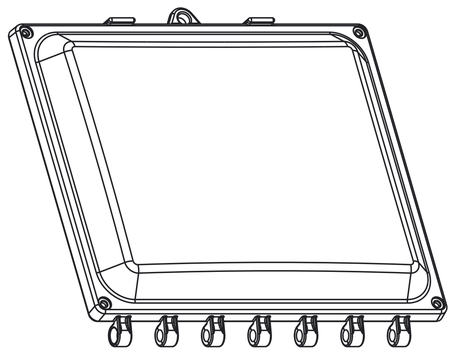

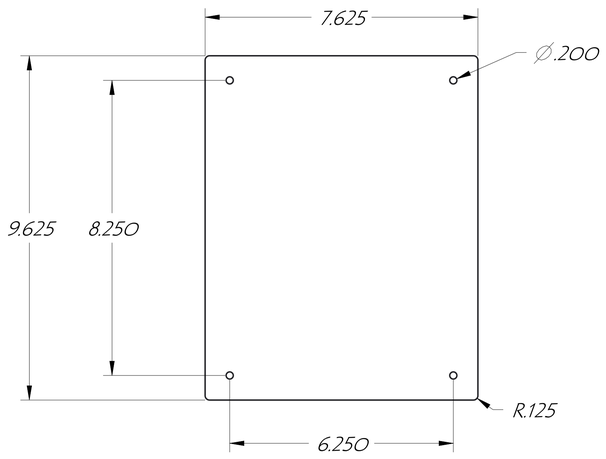

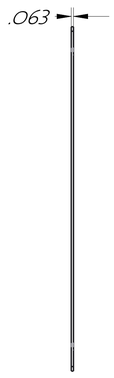

SUB PANEL OR SWING PANEL

DES. C.R.W.	DRN. C.R.W.	CHKD.			
APP.	DATE 10/16/07	SCALE			
TOLERANCES:	2 PLACE DEC. ±.010	3 PLACE DEC. ±.005	4 PLACE DEC. ±.0005	FRAC. ±1/64	
UNLESS OTHERWISE SHOWN					

ATTA BOX			CUSTOMER
PART NAME ENCLOSURE & LID	PART NO.	PART MAT'L POLYCARBONATE	
TOOL DESC. SINGLE CAVITY INJECTION MOLD		SHRINK .006/IN.	SHEET OF

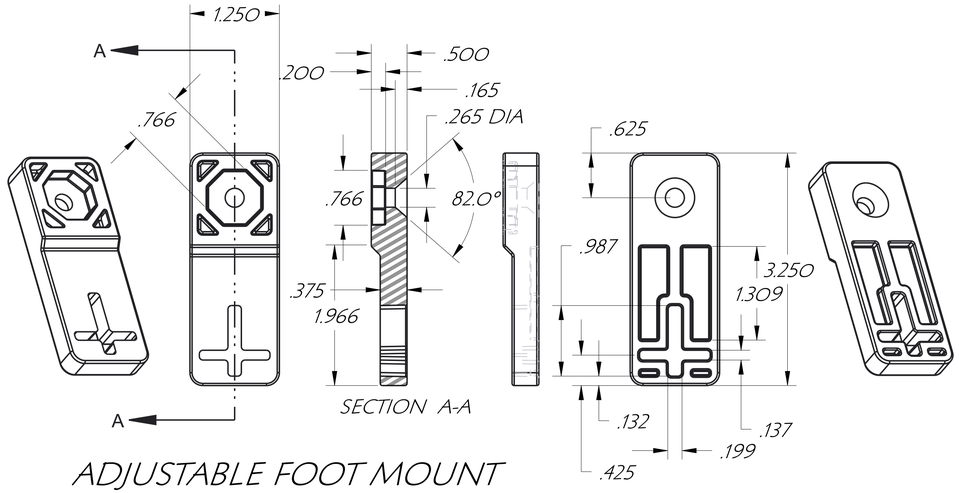

ADJUSTABLE FOOT MOUNT



LID HINGE CAP

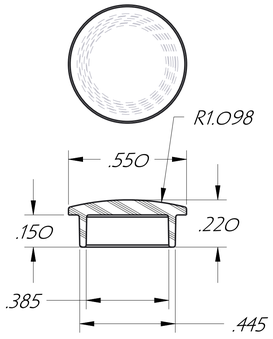

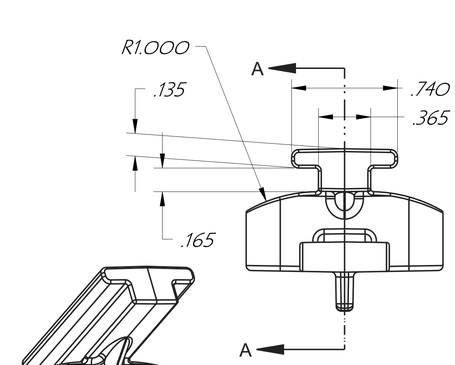

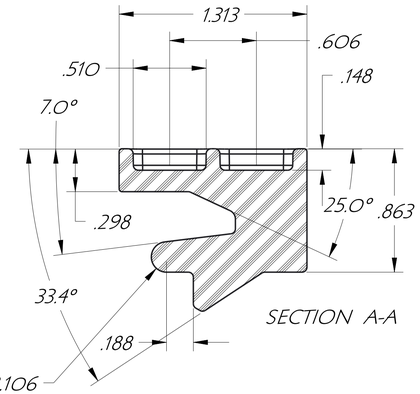

FLUSH PANEL MOUNT

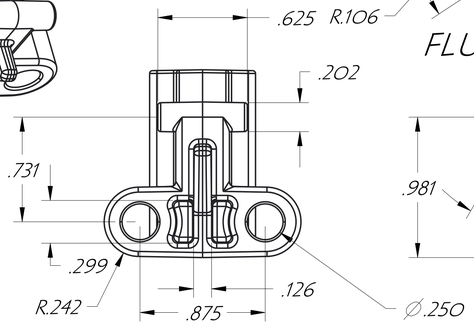

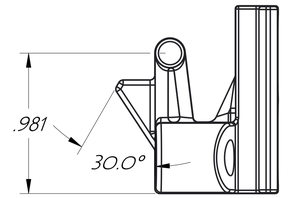

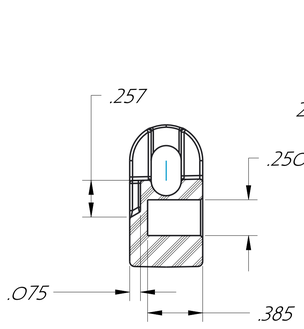

SECTION A-A

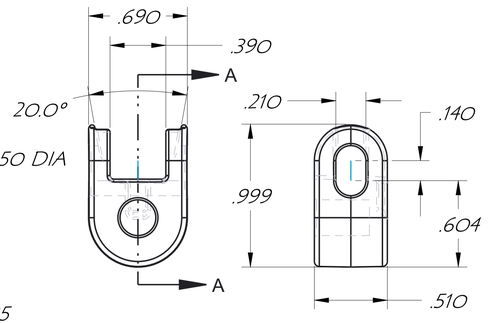

RETRACTING PANEL HINGE

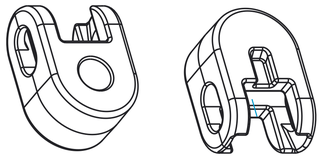

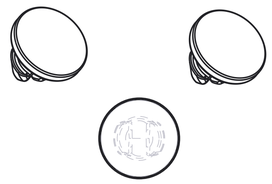

PLUG

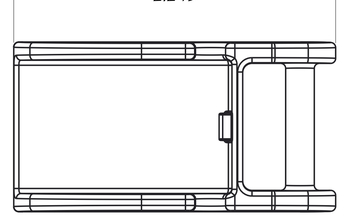

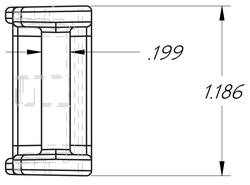

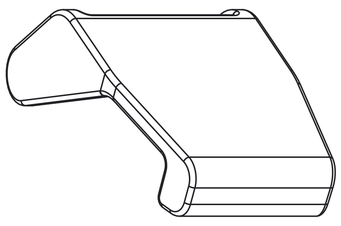

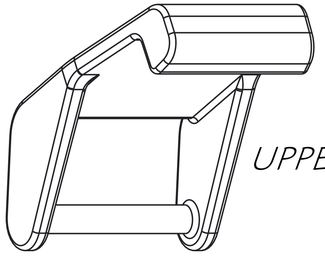

UPPER LATCH

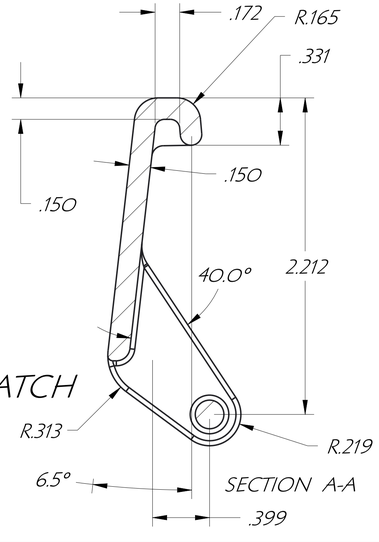

SECTION A-A

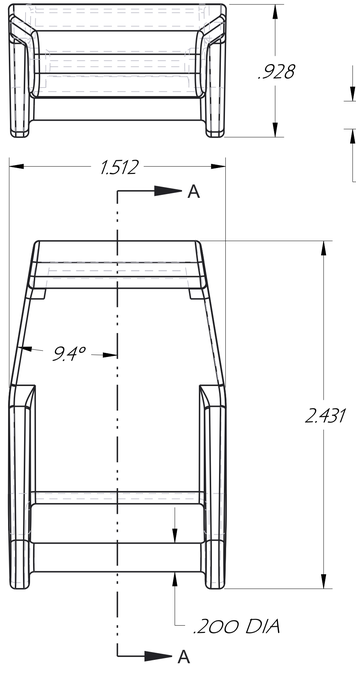

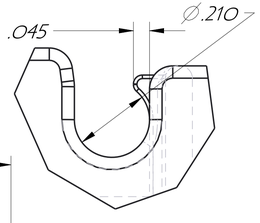

LOWER LATCH

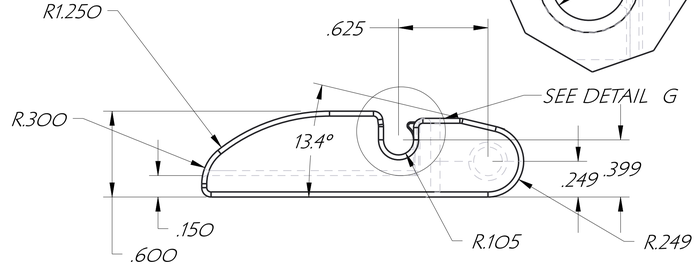

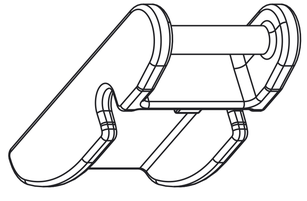

DES. C.R.W.	DRN. C.R.W.	CHKD.	ATTA BOX		CUSTOMER		
APP.	DATE 10/16/07	SCALE					
TOLERANCES:	2 PLACE DEC. ±.010	FRAC. ±1/64	PART NAME ENCLOSURE & LID	PART NO.	PART MAT'L POLYCARBONATE		
UNLESS OTHERWISE SHOWN	3 PLACE DEC. ±.005		TOOL DESC. SINGLE CAVITY INJECTION MOLD		SHRINK .006/IN.	SHEET	OF
	4 PLACE DEC. ±.0005						