Overview

This guide is designed to help you set up and install the TL70 Modular Tower Light. For complete information on programming, performance, troubleshooting, dimensions, and accessories, please refer to the Product Manual at www.bannerengineering.com. Search for part number 182214 to view the Product Manual. Use of this document assumes familiarity with pertinent industry standards and practices.

Configuring the Modules



Turn on the appropriate DIP switch to set the order of the components, counting up from the tower light's base.

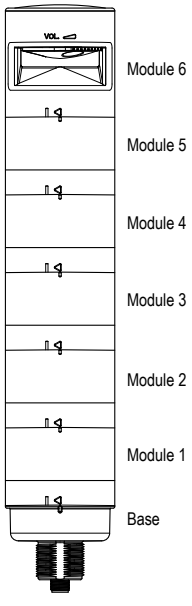

Assembly Options		DIP Switches							
		1	2	3	4	5	6	7	8
Light and Standard Audible Components	Module 1	ON							
	Module 2		ON						
	Module 3			ON					
	Module 4				ON				
	Module 5					ON			
	Module 6						ON		
Light and Module Flash Rate	3 Hz							ON	OF
	1.5 Hz							ON	ON
	Solid On*							OFF	OFF
Standard Audible Module Settings	Pulse 1.5 Hz							ON	OFF
	Chirp Alarm							ON	ON
	Siren Alarm							OFF	ON
	Continuous Alarm*							OFF	OFF

Assembly Options		DIP Switches									
		1	2	3	4	5	6	7	8	9	10
Loud Audible Module Settings	Pulse 1.5 Hz							ON	OFF		
	Chirp Alarm							ON	ON		
	Siren Alarm							OFF	ON		
	Continuous Alarm*							OFF	OFF		
	Low Intensity*									OFF	OFF
	Med. Intensity									ON	OFF
	Med./Loud Intensity									OFF	ON
	Loud Intensity									ON	ON

* Factory default setting

Original Instructions
19-Aug-25

© Banner Engineering Corp. All rights reserved.
www.bannerengineering.com

182215
p/n: 182215 Rev. H

ПРОМЭЛЕКТРОНИКА/ sales@prom-elec.com

Assembling the Modules

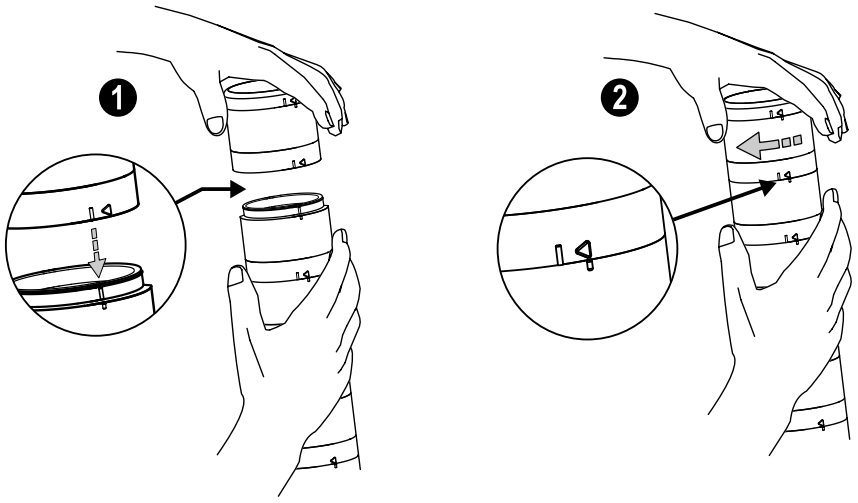

To assemble the modules:

1. Align the notches on each module and press together.
2. Rotate the top module clockwise to lock into place (notches shown in the locked position).

NOTE: DIP switches should remain in the default off position.

Wiring Diagrams

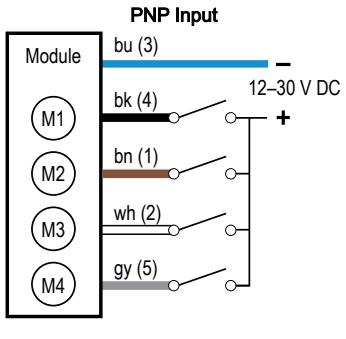

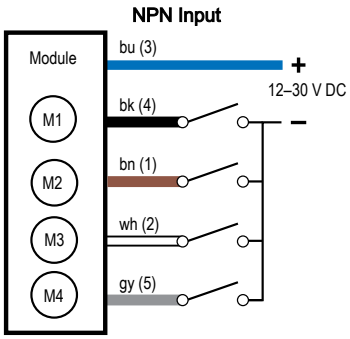

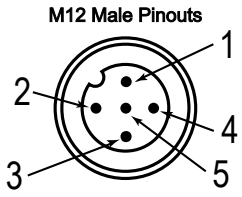

Key

1 = brown
2 = white
3 = blue
4 = black
5 = gray

M1 = Module 1
M2 = Module 2
M3 = Module 3
M4 = Module 4

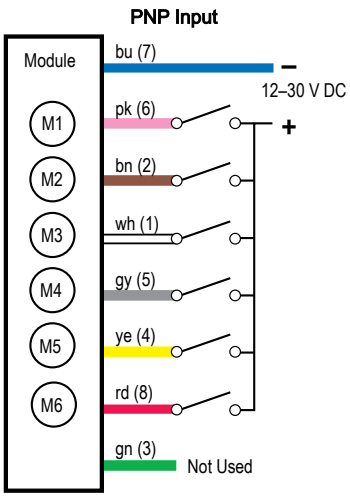

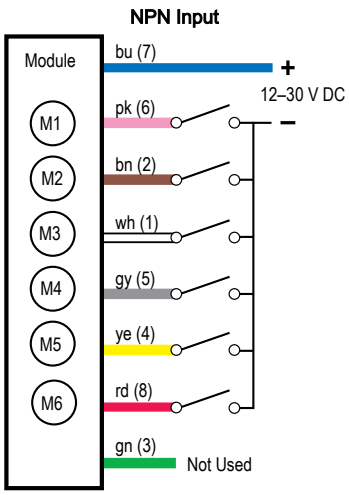

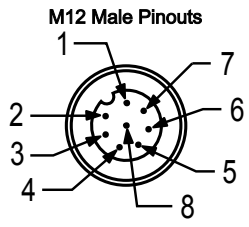

Key

1 = white
2 = brown
3 = green
4 = yellow
5 = gray
6 = pink
7 = blue
8 = red

M1 = Module 1
M2 = Module 2
M3 = Module 3
M4 = Module 4
M5 = Module 5
M6 = Module 6

© Banner Engineering Corp. All rights reserved.
www.bannerengineering.com

NOTE: Models SG-TL70-ALM and SG-TL70-ALMC are not compatible with NPN input wiring.

Wiring Terminal Block

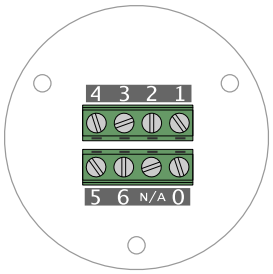

Terminal Block Key

0 = DC common
1 = Module 1
2 = Module 2
3 = Module 3
4 = Module 4
5 = Module 5
6 = Module 6

Specifications

Supply Voltage and Current

12 V DC to 30 V DC

Indicator Color or Audible Model	Maximum Current (mA)		
	at 12 V DC	at 24 V DC	at 30 V DC
Blue, Green, White	420	200	150
Red, Yellow, Orange	285	145	120
Standard Audible	30	30	30
Loud Audible (Intensity 1)	30	28	25
Loud Audible (Intensity 2)	50	45	40
Loud Audible (Intensity 3)	165	90	75
Loud Audible (Intensity 4)	350	160	120
Programmable Audible	290	140	125

Supply Protection Circuitry

Protected against transient voltages

Indicators

1 to 6 colors depending on model (Green, Red, Yellow, Blue, White, and Orange)

LEDs are independently selected

Flash Rates: 1.5 Hz ±10% and 3 Hz ±10%

Indicator Response Time

Off Response: 150 µs (maximum) at 12 V DC to 30 V DC

On Response: 180 ms (maximum) at 12 V DC; 50 ms (maximum) at 30 V DC

Indicator Characteristics

Color	Dominant Wavelength (nm) or Color Temperature (CCT)	Color Coordinates[1]		Lumen Output (Typical at 25 °C)
		x	y	
Green	525 nm	–	–	92
Red	625 nm	–	–	40
Yellow	590 nm	–	–	22
Blue	470 nm	–	–	32
White	5000 K	–	–	125
Orange	–	0.66	0.33	33

[1] Refer to CIE 1931 chromaticity diagram or color chart, to show equivalent color with indicated color coordinates.

Connections

Integral 5-pin M12 male quick-disconnect connector, 8-pin M12 male quick-disconnect connector, 150 mm (5.9 in) PVC cable with an M12 male quick-disconnect connector, terminal block, or 2 m (6.5 ft) unterminated cable, depending on model

Terminal Block Models

14 to 28 AWG wire

Operating Conditions

–40 °C to +50 °C (–40 °F to +122 °F)

95% at +50 °C maximum relative humidity (non-condensing)

Environmental Rating

IP65

Audible Alarm

Standard Audible: 2.6 kHz ± 250 Hz oscillation frequency; maximum intensity (typical) 98 dB at 1 m (3.3 ft)

Loud Audible: 2.6 kHz ± 250 Hz oscillation frequency; maximum intensity (typical) at 1 m (3.3 ft) (see table)

DIP Switches		Maximum Intensity (typical) at 1 meter dB
9	10	
ON	ON	Intensity 4: 109 dB
OFF	ON	Intensity 3: 106 dB
ON	OFF	Intensity 2: 101 dB
OFF	OFF	Intensity 1: 94 dB

Audible Adjustment

Standard Audible: Rotate the cover until the desired volume is reached

Loud Audible Alarm: Select the desired volume using DIP switches 9 and 10

Typical Reduction in Sound Intensity with Audible Adjustment (maximum to minimum):

- **Standard Audible:** 8 dB
- **Loud Audible:** 15 dB

Construction

Bases, Segments, Covers: polycarbonate

Vibration and Mechanical Shock

Vibration: 10 Hz to 55 Hz, 0.5 mm peak-to-peak amplitude per IEC 60068-2-6

Shock: 15G 11 ms duration, half sine wave per IEC 60068-2-27

© Banner Engineering Corp. All rights reserved.
www.bannerengineering.com

Certifications

Banner Engineering BV
Park Lane, Culliganlaan 2F bus 3
1831 Diegem, BELGIUM

Turck Banner LTD Blenheim House
Blenheim Court
Wickford, Essex SS11 8YT
GREAT BRITAIN

Required Overcurrent Protection

WARNING: Electrical connections must be made by qualified personnel in accordance with local and national electrical codes and regulations.

Overcurrent protection is required to be provided by end product application per the supplied table.

Overcurrent protection may be provided with external fusing or via Current Limiting, Class 2 Power Supply.

Supply wiring leads < 24 AWG shall not be spliced.

For additional product support, go to www.bannerengineering.com.

Supply Wiring (AWG)	Required Overcurrent Protection (A)	Supply Wiring (AWG)	Required Overcurrent Protection (A)
20	5.0	26	1.0
22	3.0	28	0.8
24	2.0	30	0.5

Banner Engineering Corp Limited Warranty

Banner Engineering Corp. warrants its products to be free from defects in material and workmanship for one year following the date of shipment. Banner Engineering Corp. will repair or replace, free of charge, any product of its manufacture which, at the time it is returned to the factory, is found to have been defective during the warranty period. This warranty does not cover damage or liability for misuse, abuse, or the improper application or installation of the Banner product.

THIS LIMITED WARRANTY IS EXCLUSIVE AND IN LIEU OF ALL OTHER WARRANTIES WHETHER EXPRESS OR IMPLIED (INCLUDING, WITHOUT LIMITATION, ANY WARRANTY OF MERCHANTABILITY OR FITNESS FOR A PARTICULAR PURPOSE), AND WHETHER ARISING UNDER COURSE OF PERFORMANCE, COURSE OF DEALING OR TRADE USAGE.

This Warranty is exclusive and limited to repair or, at the discretion of Banner Engineering Corp., replacement. **IN NO EVENT SHALL BANNER ENGINEERING CORP. BE LIABLE TO BUYER OR ANY OTHER PERSON OR ENTITY FOR ANY EXTRA COSTS, EXPENSES, LOSSES, LOSS OF PROFITS, OR ANY INCIDENTAL, CONSEQUENTIAL OR SPECIAL DAMAGES RESULTING FROM ANY PRODUCT DEFECT OR FROM THE USE OR INABILITY TO USE THE PRODUCT, WHETHER ARISING IN CONTRACT OR WARRANTY, STATUTE, TORT, STRICT LIABILITY, NEGLIGENCE, OR OTHERWISE.**

Banner Engineering Corp. reserves the right to change, modify or improve the design of the product without assuming any obligations or liabilities relating to any product previously manufactured by Banner Engineering Corp. Any misuse, abuse, or improper application or installation of this product or use of the product for personal protection applications when the product is identified as not intended for such purposes will void the product warranty. Any modifications to this product without prior express approval by Banner Engineering Corp will void the product warranties. All specifications published in this document are subject to change; Banner reserves the right to modify product specifications or update documentation at any time. Specifications and product information in English supersede that which is provided in any other language. For the most recent version of any documentation, refer to: www.bannerengineering.com.

For patent information, see www.bannerengineering.com/patents.

© Banner Engineering Corp. All rights reserved.
www.bannerengineering.com