

LM Analog-Discrete Series Laser L-GAGE® Sensor Product Manual

Original Instructions
p/n: 205812 Rev. E
22-Aug-25
© Banner Engineering Corp. All rights reserved. www.bannerengineering.com

ПРОМЭЛЕКТРОНИКА/ sales@prom-elec.com

Contents

Chapter 1 Product Description 4
Models 4
Overview 4
Features and Indicators 5
Specifications 5
Class 1 Laser Description and Safety Information 6
Class 2 Laser Description and Safety Information 7
FCC Part 15 Class A for Unintentional Radiators 8
Industry Canada ICES-003(A) 8
Dimensions 9

Chapter 2 Installation Instructions 10
Sensor Installation 10
Sensor Orientation 10
Install the Safety Label 10
Mount the Device 11
Wiring Diagrams 11

Chapter 3 Configuration Instructions 12
Sensor Programming 12
Remote Display Buttons and the LM 12
Quick Menu 13
Sensor Menu (MENU) 14
Remote Input 14
Locking and Unlocking the Sensor 16
Analog Output Menu (A_OUT) 16
TEACH 4 mA (0 V) and TEACH 20 mA (10 V) 17
Midpoint TEACH 19
Adjust 4 mA (0 V) 21
Adjust 20 mA (10 V) 21
Slope 21
Loss of Signal 22
Averaging 23
Discrete Output Menu (D_OUT) 24
Two-Point TEACH 25
Midpoint TEACH 27
Adjust Switch Point One 29
Adjust Switch Point Two 29
TEACH Switch Point 29
Adjust Switch Point 30
Mode 31
TEACH Dual 32
DualSPt 32
Tracking 33
Switch Point Reference (SPtRef) 33
Switch Point TEACH Offset 34
Timer 34
Polarity 34
Input Menu (INPUT) 35
Input Type 35
Input Active 35
Measure Menu (MEASURE) 36
Speed 36
Trigger 36
Display Menu (DISPLAY) 39
Units 39
Zero and Shift 39
Information Menu (INFO) 40
Reset Menu (RESET) 41
Sync Master/Slave 41

Chapter 4 Additional Remote TEACH Procedures 42
TEACH Analog Output and Discrete Output Switch Points Together 42
TEACH Analog Output and Discrete Output Midpoints Together 43

© Banner Engineering Corp. All rights reserved. www.bannerengineering.com

Chapter 5 Additional Information 44
Dual (Intensity + Distance) Mode 44
Dual Mode Reference Surface Considerations 44
Dual Mode Considerations for Clear and Transparent Object Detection 45
Sensor Menu Full Map 47

Chapter 6 Accessories 48
RSD1 Product Description 48
Models 48
Brackets 48
Cordsets 48

Chapter 7 Product Support and Maintenance 50
Factory Default Settings 50
Troubleshooting 51
Clean Sensor with Compressed Air and Isopropyl Alcohol 51
Repairs 51
Contact Us 51
Banner Engineering Corp Limited Warranty 52

© Banner Engineering Corp. All rights reserved. www.bannerengineering.com

Chapter Contents

Models 4
Overview 4
Features and Indicators 5
Specifications 5

Chapter 1 Product Description

Laser displacement sensor that supports IO-Link communication with analog and discrete (switched) outputs.



- Precision laser measurement
- Reliable measurement of challenging targets
- Compact design
- Thermally stable to minimize effect of ambient temperature changes

WARNING:

- **Do not use this device for personnel protection**
- Using this device for personnel protection could result in serious injury or death.
- This device does not include the self-checking redundant circuitry necessary to allow its use in personnel safety applications. A device failure or malfunction can cause either an energized (on) or de-energized (off) output condition.

Models

Family	Range	Output	Connector
LM	150	KI	QP
	80 = 40-80 mm 150 = 50-150 mm	KI = 4-20 mA analog and (1) NPN/PNP discrete with IO-Link KU = 0-10 V analog and (1) NPN/PNP discrete with IO-Link	QP = 12-inch PVC cable with M12 QD *QD models require mating cordset*

Overview

The LM Analog/Discrete Series Laser Sensor is designed for precise distance measurements. The optional RSD remote sensor display includes a 2-line LCD display that shows real-time. A 2-line LCD shows the real-time distance measurement (in millimeters or inches) and the analog output measurement (in milliamps or volts) when the sensor is in Run mode.

See "Factory Default Settings" on page 50 for a list of sensor default settings.

Models are available with current analog outputs. Voltage analog outputs may be available in the future. This manual provides the display information and the navigation paths for the current models with the voltage model text in parentheses if it is different.

© Banner Engineering Corp. All rights reserved.
www.bannerengineering.com

Features and Indicators

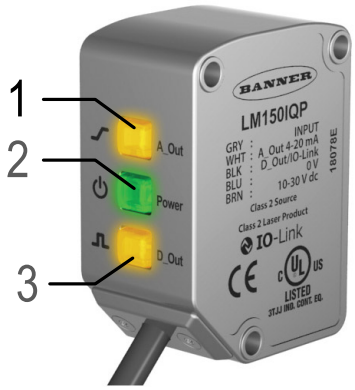

Three LED indicators provide ongoing indication of the sensing status.

1. **Analog Output LED Indicator**

   Solid Amber = Displayed distance is within the taught analog output window
   Off = Displayed distance is outside the taught analog output window

2. **Power LED Indicator**

   Solid Green = Normal operation, power On and laser On
   Flashing Green (1 Hz) = Power On and laser Off (laser enable mode)

3. **Discrete Output LED Indicator**

   Solid Amber = Discrete Output is On
   Off = Discrete Output is Off

Specifications

Supply Voltage (Vcc)

10 V DC to 30 V DC

Use only with a suitable Class 2 power supply (North America)

Power and Current Consumption, exclusive of load

Normal Run Mode: 1.5 W, Current consumption < 62 mA at 24 V DC

Supply Protection Circuitry

Protected against reverse polarity and transient overvoltages

Ambient Light Immunity

10,000 lux

Construction

Housing: stainless steel

Window: acrylic

Output Ratings

Discrete Output: 50 mA maximum (protected against continuous overload and short circuit)

Output saturation voltage (PNP): < 3 V at 50 mA

Output saturation voltage (NPN): < 2.5 V at 50 mA

Analog current output (LM...I Models): 500 Ω maximum

Analog voltage output (LM...U Models): 1000 Ω minimum

Maximum Torque

1.5 N·m

Remote Input

Allowable Input Voltage Range: 0 to Vcc

Active Low (internal weak pullup—sinking current):

High State: > 3.6 V
Low State: < 2.4 V

Active High (internal weak pulldown—sourcing current):

High State: > Vcc - 2.9 V
Low State: < Vcc - 4.6 V

Minimum Window Size, Analog and Discrete

LM80:

Analog: 1 mm
Discrete: 0.024 mm

LM150:

Analog: 1 mm
Discrete: 0.1 mm

Minimum Object Separation

LM80:

Uniform targets (6% to 90% reflectivity) 40 mm to 70 mm: 0.04 mm
Uniform targets (6% to 90% reflectivity) 70 mm to 80 mm: 0.06 mm
Non-uniform targets (6% to 90% reflectivity): 0.4 mm

LM150:

Uniform targets (6% to 90% reflectivity) 50 mm to 120 mm: 0.120 mm
Uniform targets (6% to 90% reflectivity) 120 mm to 150 mm: 0.140 mm
Non-uniform targets (6% to 90% reflectivity): 0.8 mm

Environmental Rating

IP67

Storage Temperature

–35 °C to +60 °C (–31°F to +140 °F)

Sensing Beam

Visible red, 655 nm

Sensing Range

LM80: 40 mm to 80 mm

LM150: 50 mm to 150 mm

Delay at Power Up

2.1 s

Measurement/Output Rate

0.25 ms to 4 ms; user selectable from the Speed menu

Output Configuration

Analog output: 4 mA to 20 mA (LM...I Models) or 0 to 10 V DC (LM...U Models)

Discrete output: Push/Pull, IO-Link

Analog Resolution

LM80: 0.002 mm

LM150: 0.004 mm

© Banner Engineering Corp. All rights reserved.
www.bannerengineering.com

Repeatability

LM80: ± 0.001 mm[1]

LM150: ± 0.002 mm [2]

Analog and IO-Link Linearity

LM80:

40 mm to 70 mm: ± 0.02 mm
70 mm to 80 mm: ± 0.03 mm

LM150:

50 mm to 120 mm: ± 0.06 mm
120 mm to 150 mm: ± 0.07 mm

IO-Link Accuracy[3]

LM80: ± 0.175 mm

LM150: ± 0.2 mm

Temperature Effect, Typical

LM80: ± 0.006 mm/°C

LM150: ± 0.008 mm/°C

Response Time

Total response speed varies from 0.5 ms to 2048 ms, depending on base measurement rate and averaging settings.

Boresighting

± 0.70 mm at 40 mm
± 0.87 mm at 50 mm
± 1.40 mm at 80 mm
± 2.62 mm at 150 mm

Vibration/Mechanical Shock

Meets IEC 60947-5-2 (10 to 60 Hz max., double amplitude 0.06 in, max acceleration 10G. 30G 11 ms duration, half sine wave)

Application Note

For optimum performance, allow 10 minutes for the sensor to warm up

[1] Performance with 6% to 90% reflectivity with 128× averaging. With 1× averaging, repeatability of ± 0.004 mm from 40 to 80 mm.
[2] Performance with 6% to 90% reflectivity with 128× averaging. With 1× averaging, repeatability of ± 0.005 mm from 50 to 120 mm and ± 0.010 mm from 120 to 150 mm.
[3] The accuracy specification refers to the possible absolute offset when installing a sensor without taking any reference measurement. Linearity is the more relevant specification for most applications.

Operating Conditions

–10 °C to +55 °C (+14 °F to +131 °F)

90% at +55 °C maximum relative humidity (non-condensing)

Certifications

Banner Engineering BV
Park Lane, Culliganlaan 2F bus 3
1831 Diegem, BELGIUM

Turck Banner LTD Blenheim House
Blenheim Court
Wickford, Essex SS11 8YT
GREAT BRITAIN

UL Type 1

Required Overcurrent Protection

WARNING: Electrical connections must be made by qualified personnel in accordance with local and national electrical codes and regulations.

Overcurrent protection is required to be provided by end product application per the supplied table.

Overcurrent protection may be provided with external fusing or via Current Limiting, Class 2 Power Supply.

Supply wiring leads < 24 AWG shall not be spliced.

For additional product support, go to www.bannerengineering.com.

Supply Wiring (AWG)	Required Overcurrent Protection (A)	Supply Wiring (AWG)	Required Overcurrent Protection (A)
20	5.0	26	1.0
22	3.0	28	0.8
24	2.0	30	0.5

Class 1 Laser Description and Safety Information



Laser light. Do not stare into the beam.

Complies with 21 CFR 1040.10 and 1040.11 except for deviations pursuant to Laser Notice No. 56, dated May 8, 2019.

CLASS 1
LASER PRODUCT

CAUTION:

- **Never stare directly into the sensor lens.**
- Laser light can damage your eyes.
- Avoid placing any mirror-like object in the beam. Never use a mirror as a retroreflective target.

© Banner Engineering Corp. All rights reserved.
www.bannerengineering.com

CAUTION:

- **Return defective units to the manufacturer.**
- Use of controls or adjustments or performance of procedures other than those specified herein may result in hazardous radiation exposure.
- Do not attempt to disassemble this sensor for repair. A defective unit must be returned to the manufacturer.

CAUTION:

- **Ne regardez jamais directement la lentille du capteur.**
- La lumière laser peut endommager la vision.
- Évitez de placer un objet réfléchissant (de type miroir) dans la trajectoire du faisceau. N'utilisez jamais de miroir comme cible rétro-réfléchissante.

CAUTION:

- **Tout dispositif défectueux doit être renvoyé au fabricant.**
- L'utilisation de commandes, de réglages ou de procédures autres que celles décrites dans le présent document peut entraîner une exposition dangereuse aux radiations.
- N'essayez pas de démonter ce capteur pour le réparer. Tout dispositif défectueux doit être renvoyé au fabricant.

Class 1 lasers are lasers that are safe under reasonably foreseeable conditions of operation, including the use of optical instruments for intrabeam viewing.

Complies with IEC 60825-1:2014 and EN 60825-1:2014+A11:2021.

For safe laser use:

- Do not stare at the laser.
- Do not point the laser at a person’s eye.
- Mount open laser beam paths either above or below eye level, where practical.
- Terminate the beam emitted by the laser product at the end of its useful path.

Class 1 Laser Characteristics

Output power: < 0.33 mW
Laser wavelength: 655 nm
Pulse duration: 45 µs to 1750 µs

Class 2 Laser Description and Safety Information



Laser light. Do not stare into the beam.

Complies with 21 CFR 1040.10 and 1040.11 except for deviations pursuant to Laser Notice No. 56, dated May 8, 2019.

CLASS 2
LASER PRODUCT

CAUTION:

- **Never stare directly into the sensor lens.**
- Laser light can damage your eyes.
- Avoid placing any mirror-like object in the beam. Never use a mirror as a retroreflective target.

© Banner Engineering Corp. All rights reserved.
www.bannerengineering.com

CAUTION:
- **Return defective units to the manufacturer.**
- Use of controls or adjustments or performance of procedures other than those specified herein may result in hazardous radiation exposure.
- Do not attempt to disassemble this sensor for repair. A defective unit must be returned to the manufacturer.

CAUTION:
- **Ne regardez jamais directement la lentille du capteur.**
- La lumière laser peut endommager la vision.
- Évitez de placer un objet réfléchissant (de type miroir) dans la trajectoire du faisceau. N'utilisez jamais de miroir comme cible rétro-réfléchissante.

CAUTION:
- **Tout dispositif défectueux doit être renvoyé au fabricant.**
- L'utilisation de commandes, de réglages ou de procédures autres que celles décrites dans le présent document peut entraîner une exposition dangereuse aux radiations.
- N'essayez pas de démonter ce capteur pour le réparer. Tout dispositif défectueux doit être renvoyé au fabricant.

Class 2 lasers are lasers that emit visible radiation in the wavelength range from 400 nm to 700 nm, where eye protection is normally afforded by aversion responses, including the blink reflex. This reaction may be expected to provide adequate protection under reasonably foreseeable conditions of operation, including the use of optical instruments for intrabeam viewing.

Complies with IEC 60825-1:2014 and EN 60825-1:2014+A11:2021.

Class 2 Laser Safety Notes. Low-power lasers are, by definition, incapable of causing eye injury within the duration of a blink (aversion response) of 0.25 seconds. They also must emit only visible wavelengths (400 nm to 700 nm). Therefore, an ocular hazard may exist only if individuals overcome their natural aversion to bright light and stare directly into the laser beam.

For safe laser use:
- Do not stare at the laser.
- Do not point the laser at a person’s eye.
- Mount open laser beam paths either above or below eye level, where practical.
- Terminate the beam emitted by the laser product at the end of its useful path.

IMPORTANT: This laser device is not bore-sighted.

Class 2 Laser Characteristics

Output power: 0.45 mW
Laser wavelength: 640 nm - 670 nm
Pulse duration: 45-1,750 ms

FCC Part 15 Class A for Unintentional Radiators

This equipment has been tested and found to comply with the limits for a Class A digital device, pursuant to Part 15 of the FCC Rules. These limits are designed to provide reasonable protection against harmful interference when the equipment is operated in a commercial environment. This equipment generates, uses, and can radiate radio frequency energy and, if not installed and used in accordance with the instruction manual, may cause harmful interference to radio communications. Operation of this equipment in a residential area is likely to cause harmful interference in which case the user will be required to correct the interference at his own expense.

(Part 15.21) Any changes or modifications not expressly approved by the party responsible for compliance could void the user’s authority to operate this equipment.

Industry Canada ICES-003(A)

This device complies with CAN ICES-3 (A)/NMB-3(A). Operation is subject to the following two conditions: 1) This device may not cause harmful interference; and 2) This device must accept any interference received, including interference that may cause undesired operation.

Cet appareil est conforme à la norme NMB-3(A). Le fonctionnement est soumis aux deux conditions suivantes : (1) ce dispositif ne peut pas occasionner d'interférences, et (2) il doit tolérer toute interférence, y compris celles susceptibles de provoquer un fonctionnement non souhaité du dispositif.

© Banner Engineering Corp. All rights reserved.
www.bannerengineering.com

Dimensions

All measurements are listed in millimeters [inches], unless noted otherwise. The measurements provided are subject to change.

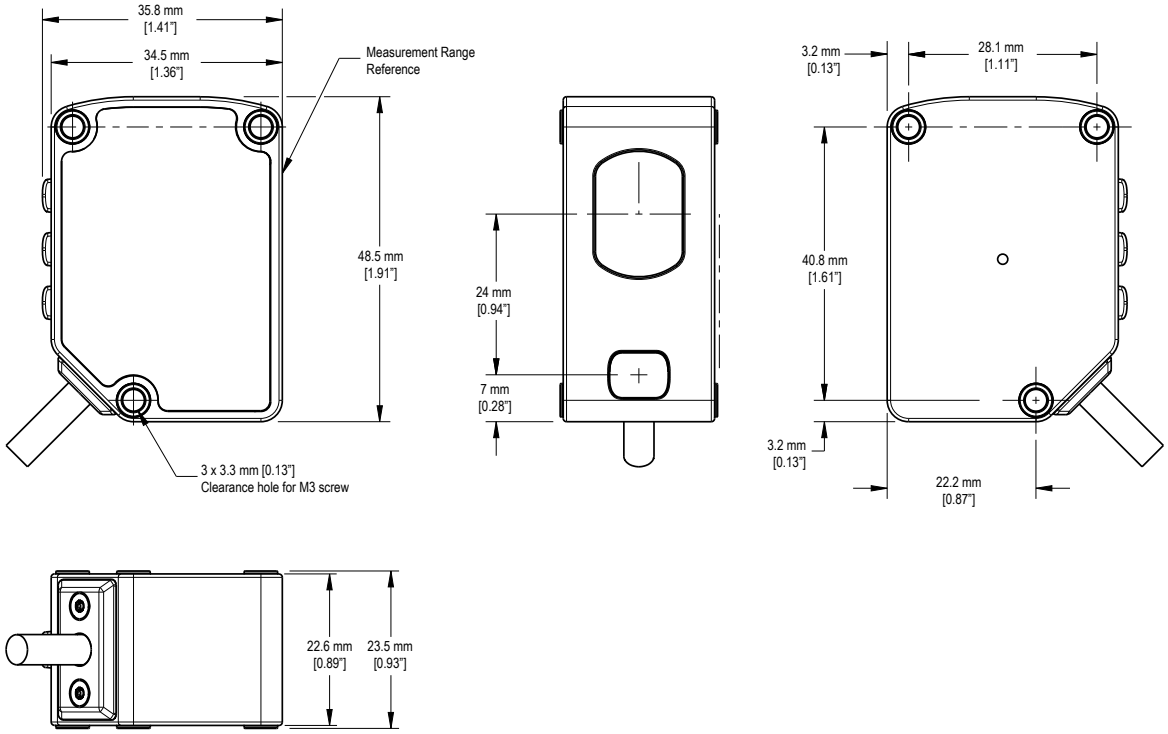

© Banner Engineering Corp. All rights reserved.
www.bannerengineering.com

Chapter Contents

Sensor Installation 10
Sensor Orientation 10
Install the Safety Label 10
Mount the Device 11
Wiring Diagrams 11

Chapter 2 Installation Instructions

Sensor Installation

NOTE: Handle the sensor with care during installation and operation. Sensor windows soiled by fingerprints, dust, water, oil, etc. may create stray light that may degrade the peak performance of the sensor. Blow the window clear using filtered, compressed air, then clean as necessary using 70% isopropyl alcohol and cotton swabs or water and a soft cloth.

Sensor Orientation

Correct sensor-to-object orientation is important to ensure proper sensing. See the following figures for examples of correct and incorrect sensor-to-object orientation as certain placements may pose problems for sensing distances.

Orientation by a wall

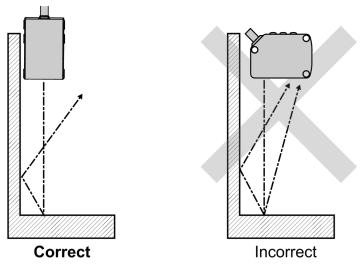

Orientation in an opening

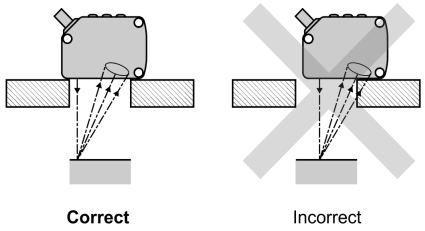

Orientation for a turning object

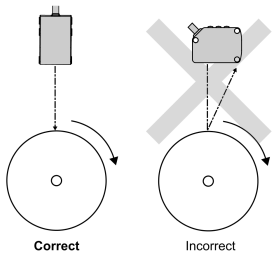

Orientation for a height difference

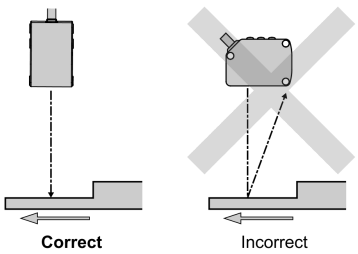

Orientation for a color or luster difference

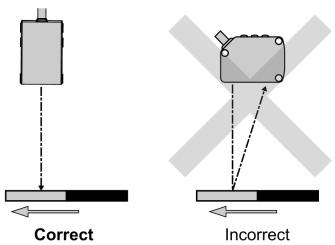

Orientation for a highly reflective target

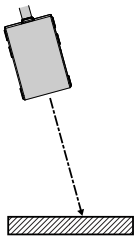

Applying tilt to sensor may improve performance on reflective targets. The direction and magnitude of the tilt depends on the application, but a 15° tilt is often sufficient.

Install the Safety Label

The safety label must be installed on or near the LM sensors.

© Banner Engineering Corp. All rights reserved.
www.bannerengineering.com

NOTE: Position the label on the cable or near the sensor in a location that has minimal chemical exposure.

Typical installation; other mounting options are possible.

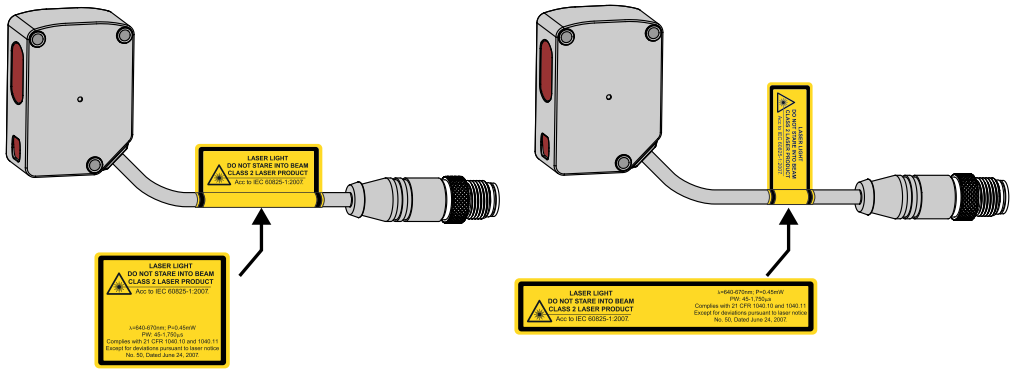

1. Remove the protective cover from the adhesive on the label.
2. Wrap the label around the LM cable, as shown.
3. Press the two halves of the label together.

Mount the Device

1. If a bracket is needed, mount the device onto the bracket.
2. Mount the device (or the device and the bracket) to the machine or equipment at the desired location. Do not tighten the mounting screws at this time.
3. Check the device alignment.
4. Tighten the mounting screws to secure the device (or the device and the bracket) in the aligned position.

Wiring Diagrams

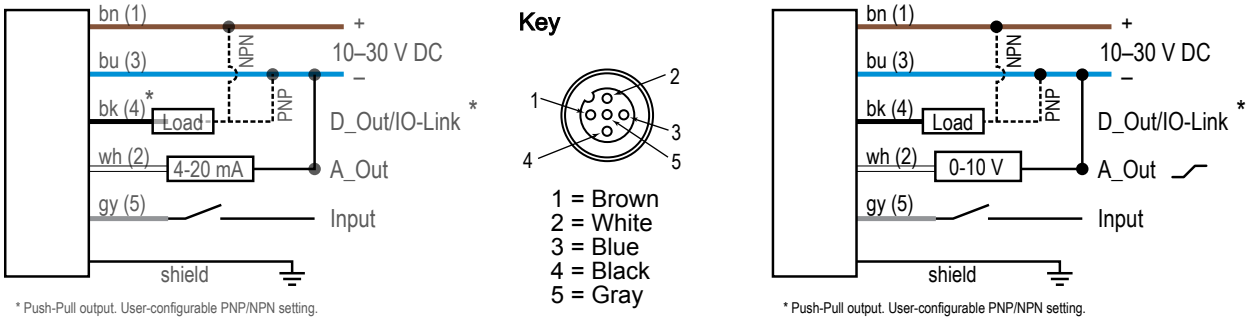

The bare shield wire is connected internally to the sensor housing and should be connected as follows:

- If the sensor housing is mounted so that it is in continuity with both the machine frame and earth ground, connect the bare wire (also) to earth ground.
- If the sensor housing is mounted so that it is insulated from the machine frame and you are experiencing noise, connecting the bare wire to -V dc (together with the blue wire), may help.
- If the sensor is mounted so that it is in continuity with the machine frame, but not with earth ground, do not connect the bare wire (e.g. cut off the bare wire).

© Banner Engineering Corp. All rights reserved.
www.bannerengineering.com

Chapter Contents

Sensor Programming 12
Remote Display Buttons and the LM 12
Quick Menu 13
Sensor Menu (MENU) 14
Remote Input 14
Locking and Unlocking the Sensor 16
Analog Output Menu (A_OUT) 16
Discrete Output Menu (D_OUT) 24
Input Menu (INPUT) 35
Measure Menu (MEASURE) 36
Display Menu (DISPLAY) 39
Information Menu (INFO) 40
Reset Menu (RESET) 41
Sync Master/Slave 41

Chapter 3 Configuration Instructions

Sensor Programming

Program the sensor using the buttons on the RSD1 remote sensor display accessory, via IO-Link, or the remote input (limited programming options).

If you are using the RSD1 for programming, from Run mode, use the buttons to access the Quick Menu and the Sensor Menu. See the instruction manual (p/n 205812) for more information on the options available from each menu. For TEACH options, follow the TEACH instructions.

In addition to programming the sensor, use the remote input to disable the buttons for security, preventing unauthorized or accidental programming changes. For more information, see "Remote Input" on page 14.

Accessing the Menus

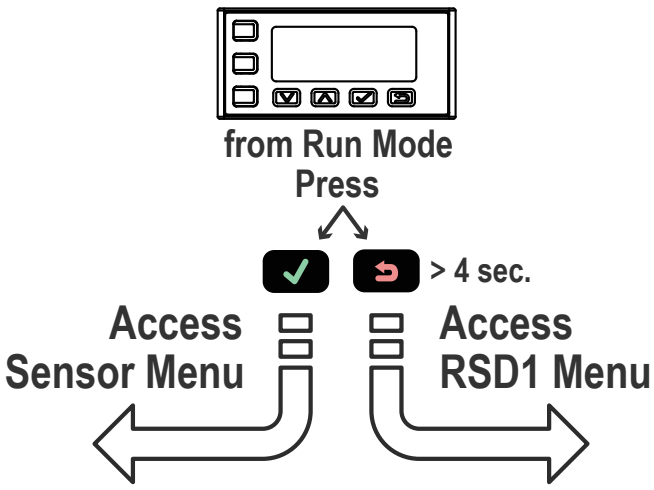

Remote Display Buttons and the LM

Use the RSD1 buttons **Down**, **Up**, **Enter**, and **Escape** to view or change RSD1 settings and information and to program a connected sensor.

© Banner Engineering Corp. All rights reserved.
www.bannerengineering.com

Down and Up Buttons
Press **Down** and **Up** to:

- Access the Quick Menu from Run mode
- Navigate the menu systems
- Change programming settings
- Change individual digit values in distance based settings

When navigating the menu systems, the menu items loop.

Press **Down** and **Up** to change setting values. Press and hold the buttons to cycle through numeric values. After changing a setting value, the value slowly flashes until the change is saved using the **Enter** button.

Enter Button
Press **Enter** to:

- Access the Sensor Menu from Run mode
- Access the submenus
- Move right one digit in distance based settings
- Save changes

In the RSD1 Menu, a check mark in the lower right corner of the display indicates that pressing **Enter** accesses a submenu.

Press **Enter** to save changes. New values flash rapidly, and the sensor returns to the parent menu.

Escape Button
Press and hold **Escape** for 4 seconds to:

- Access the RSD1 Menu while in Run mode

Press **Escape** to:

- Leave the current menu and return to the parent menu

IMPORTANT: Pressing **Escape** discards any unsaved programming changes.

In the RSD1 Menu, a return arrow in the upper left corner of the display indicates that pressing **Escape** returns to the parent menu.

Press and hold **Escape** for 2 seconds to return to Run mode from the RSD1 Menu.

Quick Menu

The sensor includes a Quick Menu with easy access to view and change the analog and discrete output switch points.

Access the Quick Menu by pressing **Down** or **Up** from Run mode. When in the Quick Menu, the current distance measurement displays on the first line and the menu name and the analog value alternate on the second line of the display.

Press **Enter** to access the switch points.

Press **Down** or **Up** to change the switch point to the desired value.

Press **Enter** to save the new value and return to the Quick Menu.

© Banner Engineering Corp. All rights reserved.
www.bannerengineering.com

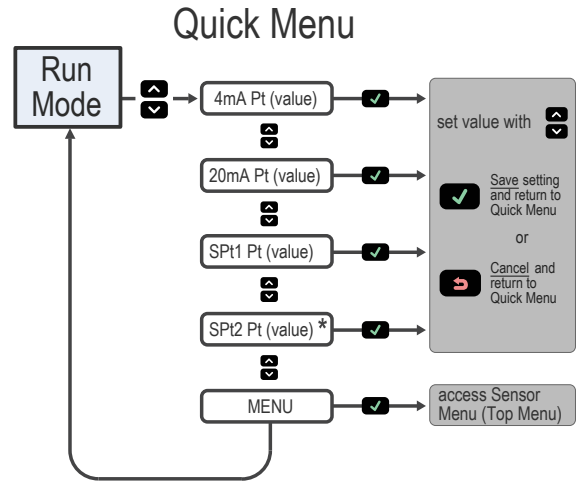

* In Setpoint mode, SPt1 Pt is replaced by SPt and SPt2 Pt is not available.
In Dual mode, SPt1 is replaced by DualSPt and SPt2 Pt is not available.

Sensor Menu (MENU)

Access the Sensor Menu by pressing **Enter** from Run mode. The Sensor Menu is also accessible from the Quick Menu: navigate to **MENU** and press **Enter**. The Sensor Menu includes several submenus that provide access to view and change sensor settings and to view sensor information.

Sensor Menu Basic Map

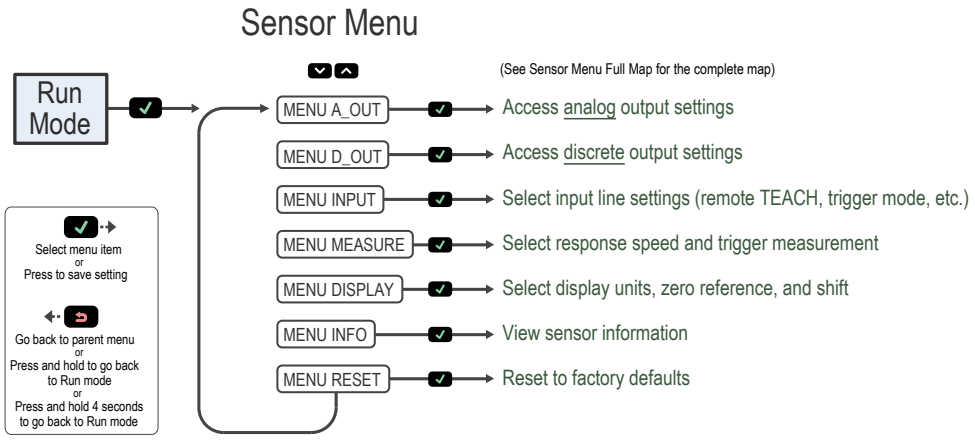

See "Sensor Menu Full Map" on page 47 and the Menu sections of this manual for more information.

Remote Input

Use the remote input to program the sensor remotely. The remote input is disabled by default. Activate remote input using the buttons to navigate to the Input Type menu option.

The remote input provides limited programming options and is Active Low by default. For Active Low, connect the gray input wire to ground (0 V DC), with a remote switch connected between the wire and ground. To use the Active High function, configure the sensor for Active High using the buttons on the sensor, then connect the gray input wire to V+ (12 to 30 V DC). Pulse the remote input according to the diagram and the instructions provided in this manual.

The length of the individual programming pulses is equal to the value **T: 0.04 seconds ≤ T ≤ 0.8 seconds**.

Exit remote programming modes by holding the remote input low for > 2 seconds, or waiting for the automatic 60-second timeout, or by pressing and holding **Escape** for 2 seconds. The sensor returns to Run mode without saving any new settings.

© Banner Engineering Corp. All rights reserved.
www.bannerengineering.com

Remote Input Map

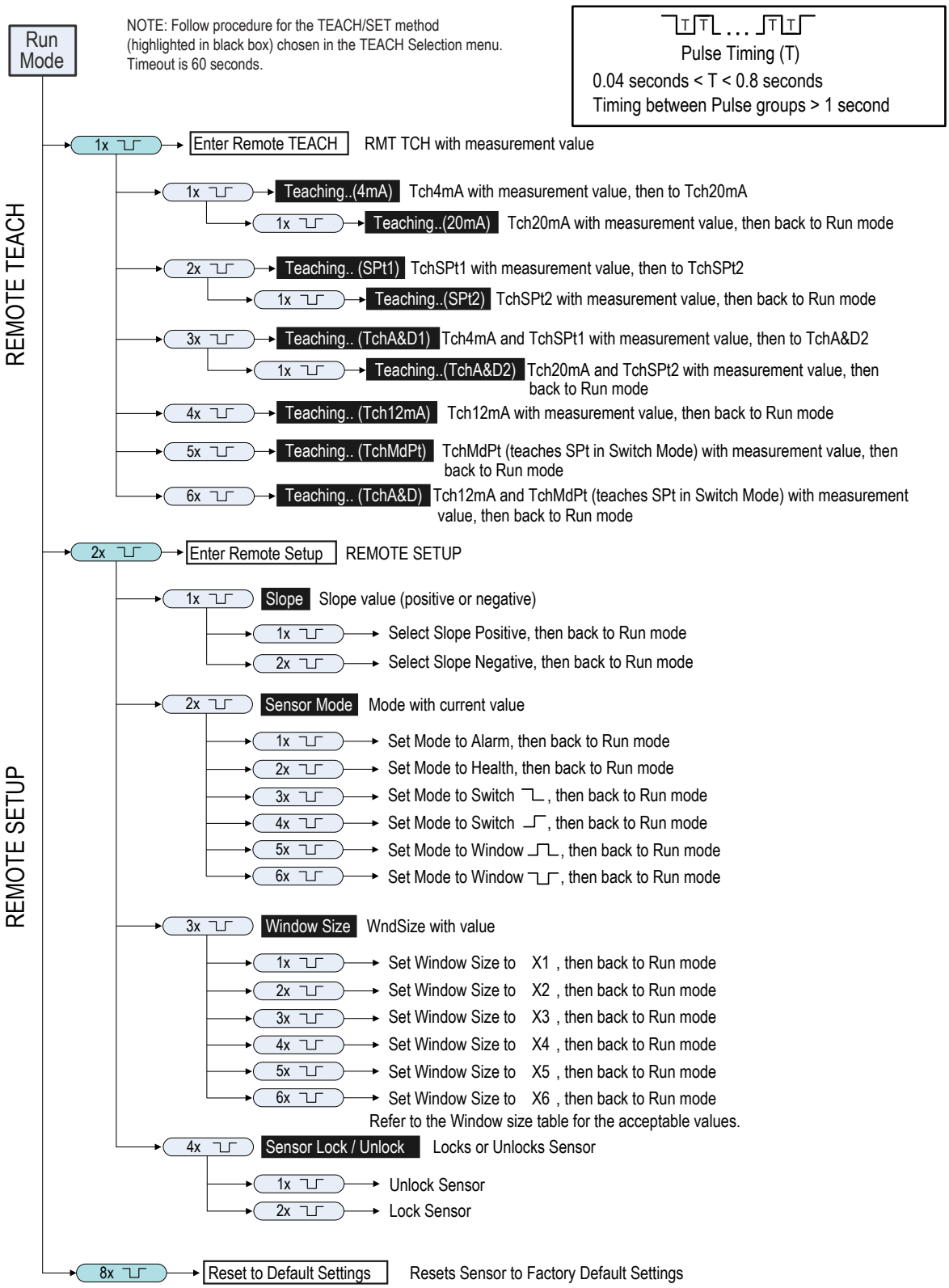

© Banner Engineering Corp. All rights reserved.
www.bannerengineering.com

Remote TEACH Window Sizes

Variable	Remote TEACH Window Size (mm)
	LM80 and LM150
X1	1
X2	5
X3	10
X4	30
X5	50
X6	90

Locking and Unlocking the Sensor

Use the lock and unlock feature to prevent unauthorized or accidental programming changes. A lock symbol displays in the upper left corner of the display to indicate when the sensor is locked. When locked, the menus are available to view settings, but the values cannot be changed. The remote input is also disabled, except for the unlock function.

To lock the sensor, the RSD must be connected. Even if the RSD is disconnected, the LM remains locked until the next time the RSD is connected. The sensor lockout menu is separate from the RSD lockout menu.

Button Instructions

To lock or unlock the sensor using the buttons, press and hold **Down** and **Escape** simultaneously for 3 seconds.

Remote Input Instructions

1. Access the setup mode.

Action		Result
Double-pulse the remote input.	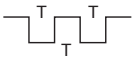	"**REMOTE SETUP**" displays.

2. Access the lock/unlock function.

Action		Result
Four-pulse the remote input.	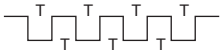	"**LOCK**" and the current status (unlocked or locked) display.

3. Lock or unlock the sensor.

Action		Result
Unlock : Single-pulse the remote line.		"**Unlocked**" flashes and the sensor returns to Run mode. The sensor is unlocked.
Lock: Double-pulse the remote input.	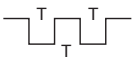	"**Locked**" flashes and the sensor returns to Run mode. The sensor is locked and the lock symbol displays in the upper left corner.

Analog Output Menu (A_OUT)

Use the Analog Output menu to view or change:

- 4 mA (0 V) setpoint
- 20 mA (10 V) setpoint
- 12 mA (5 V) window

© Banner Engineering Corp. All rights reserved.
www.bannerengineering.com

- Slope
- Loss of signal behavior
- Average

Analog Output Menu Map

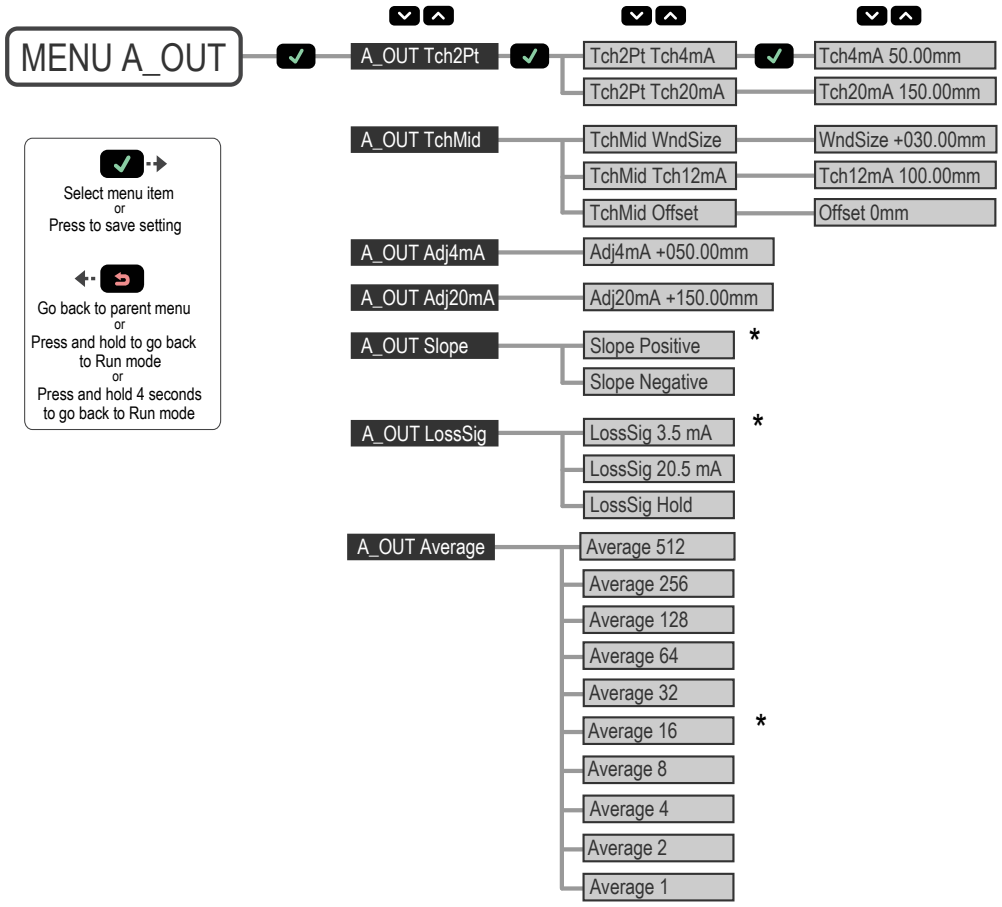

TEACH 4 mA (0 V) and TEACH 20 mA (10 V)

The Tch4mA (Tch0V) and Tch20mA (Tch10V) options use targets to set the 4 mA (0 V) and 20 mA (10 V) to the desired setpoints. When using the buttons, only one value needs to be set if the second value is valid. When using the remote input, both values must be set.

Navigate: MENU › A_OUT › Tch2Pt › Tch4mA (Tch0V) or navigate: **MENU › A_OUT › Tch2Pt › Tch20mA (Tch10V)**

Remote input: Available

Button Instructions

1. Present the target.

Action	Result
Present the target. The target must be within the sensor's measurement range.	The target's analog output measurement and distance measurement values display.

2. Access the TEACH mode and TEACH the sensor.

© Banner Engineering Corp. All rights reserved.
www.bannerengineering.com

Action	Result
Navigate: **MENU › A_OUT › Tch2Pt › Tch4mA (Tch0V)** OR Navigate: **MENU › A_OUT › Tch2Pt › Tch20mA (Tch10V)**	The selected TEACH mode and "**Teaching**" display while the sensor is being taught. TEACH Accepted The new value is shown on the second line of the display and flashes before it is saved and the sensor returns to the parent menu. TEACH Not Accepted "**FAIL**" and a warning message display, and the sensor returns to the parent menu.

3. Repeat steps 1 to 2 for the other setpoint, if desired.

Remote Input Instructions

Teaches both the 4 mA (0 V) and 20 mA (10 V) setpoints.

1. Access the TEACH mode.

Action		Result
Single-pulse the remote input.		"**RMT TCH**" and the current measurement value display.

2. Present the target.

Action	Result
Present the 4 mA (0 V) target.	"**RMT TCH**" and the target's measurement value display.

3. TEACH the sensor.

Action		Result
Single-pulse the remote input.		"**Tch4mA (Tch0V) Teaching**" displays while the sensor is being taught. TEACH Accepted The new value displays on the second line of the display, flashes, and then "**Tch20mA (Tch10V)**" and the current measurement value display. TEACH Not Accepted "**FAIL**" flashes, the sensor returns to step 2, and "**RMT TCH**" displays.

4. Present the target.

Action	Result
Present the 20 mA (10 V) target.	"**Tch20mA (Tch10V)**" and the target's measurement value display.

5. TEACH the sensor.

© Banner Engineering Corp. All rights reserved.
www.bannerengineering.com

Action		Result
Single-pulse the remote input.		"**Tch20mA (Tch10V) Teaching**" displays while the sensor is being taught. **TEACH Accepted** The new value displays on the second line of the display, flashes, and the sensor returns to Run mode. **TEACH Not Accepted** "**FAIL**" flashes, the sensor returns to step 2, and "**RMT TCH**" displays.

Midpoint TEACH

The Midpoint TEACH uses both the window size and the 12 mA (5 V) setpoint to determine the actual measurement window. For example, a window of 200 mm with a 12 mA (5 V) setpoint of 600 mm places the measurement window from 500 mm to 700 mm.

Window and Midpoint Example

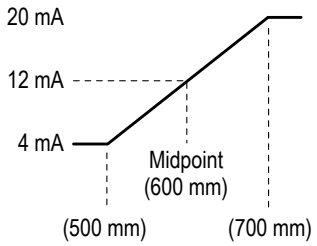

To use the Midpoint TEACH:

1. Set the window size.
2. Set the measurement window using "TEACH 12 mA (5 V)" on page 20.

The Analog Output Midpoint TEACH and the Discrete Output Midpoint TEACH are independent settings (see "Midpoint TEACH" on page 27).

Set the Window Size

The **A_OUT › TchMid › WndSize** option sets the window size that the Midpoint TEACH uses to set the 4 mA (0 V) and 20 mA (10 V) setpoints.

The taught surface must be inside the defined sensing range, and at least one setpoint (with offset applied, if any) must be located within the sensing range.

The Analog Output window size is a different setting than the Discrete Output window size when defined using the push buttons.

Parameters	LM80 and LM150
Analog Output Window Size Minimum	1 mm
Analog Output Window Size Maximum	90 mm
Analog Output Range	50 mm to 150 mm
Analog Output Default Window Size	30 mm

Navigate: MENU › A_OUT › TchMid › WndSize

Remote Input: Available

1. Access the Window Size mode.
   - When using the push button: Navigate: **MENU › A_OUT › TchMid › WndSize**. "WndSize" and the current window size value display.
   - When using the remote input: Double-pulse the remote input to enter setup mode. "REMOTE SETUP" displays. Three-pulse the remote input to enter window size mode. "WndSize" and the current window size value displays.
2. Set the window size.
   - When using the push button: Use the **Up** and **Down** buttons to set the desired window size—the value changes in increments of 0.02 mm. "WndSize" and the new value displays. Press **Enter** to save the new value. The new value flashes and the sensor returns to "TchMid WndSize".
   - When using the remote input: Pulse the remote input 1 to 6 times to select the desired window size. The new value flashes and the sensor returns to Run mode. (Sets the A_OUT and D_OUT window size.)

© Banner Engineering Corp. All rights reserved.
www.bannerengineering.com

Pulses	Window Size (mm)
	LM80 and LM150
1	1
2	5
3	10
4	30
5	50
6	90

TEACH 12 mA (5 V)

The Tch12mA (Tch5V) option sets the midpoint that determines the actual measurement window.

Navigate: MENU › A_OUT › TchMid › Tch12mA (Tch5V)

Remote Input: Available

Button Instructions

1. Present the target.

Action	Result
Present the target.	The target's analog output measurement and distance measurement values display.

2. Access the TEACH 12 mA (5 V) mode and TEACH the sensor.

Action	Result
Navigate: **MENU › A_OUT › TchMid › Tch12mA (Tch5V)**.	"**Tch12mA (Tch5V) Teaching**" displays while the sensor is being taught. TEACH Accepted The new value is shown on the second line of the display and flashes before it is saved and the sensor returns to "**TchMid Tch12mA (Tch5V)**". TEACH Not Accepted "**FAIL**" and a warning message display and the sensor returns to "**Tch Mid Tch12mA (Tch5V)**".

Remote Input Instructions

1. Access the TEACH mode.

Action		Result
Single-pulse the remote input.		"**RMT TCH**" and the current measurement value display.

2. Present the target.

Action	Result
Present the target.	"**RMT TCH**" and the target's measurement value display.

3. TEACH the sensor.

© Banner Engineering Corp. All rights reserved.
www.bannerengineering.com

Action		Result
Four-pulse the remote input.		"**Tch12mA (Tch5V) Teaching**" displays while the sensor is being taught. **TEACH Accepted** The new value displays on the second line of the display, flashes, and the sensor returns to Run mode **TEACH Not Accepted** "**FAIL**" flashes, the sensor returns step 2, and "**RMT TCH**" displays.

Window TEACH Offset

Use the **A_OUT › TchMid › Offset** menu to set an offset from the taught distance used during a 12 mA (5 V) TEACH. By default, the value is 0 mm because the window is centered around the taught distance. A positive offset value always shifts the window towards the sensor.

Adjust 4 mA (0 V)

The Adj4mA (Adj0V) option manually adjusts the distance at which the Analog Output is 4mA (0 V). The value is adjustable within the sensor's range. It is required to at least maintain the minimum window size.

Navigate: MENU › A_OUT › Adj4mA (Adj0V)

Remote Input: Not available

Default: 50 mm

Adjust 20 mA (10 V)

The Adj20mA (Adj10V) option manually adjusts the distance at which the Analog Output is 20 mA (10 V). The value is adjustable between the sensor's range. It is required to at least maintain the minimum window size.

Navigate: MENU › A_OUT › Adj20mA (Adj10V)

Remote Input: Not available

Default: 150 mm

Slope

The Slope option sets the slope as positive or negative. This swaps the 4 mA and 20 mA (0 V and 10 V) values.

Navigate: MENU › A_OUT › Slope

Remote Input: Available

Default: Positive

© Banner Engineering Corp. All rights reserved.
www.bannerengineering.com

Slope—Current-Sourcing Models

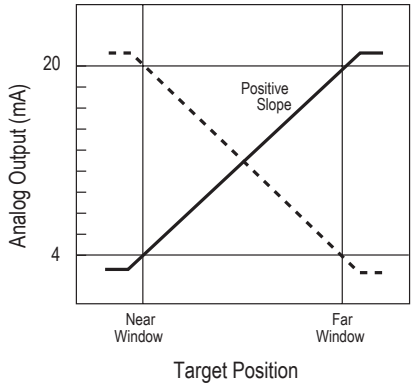

The analog current output tracks slightly beyond each window limit (from 3.8 mA to 20.2 mA)

Slope—Voltage-Sourcing Models

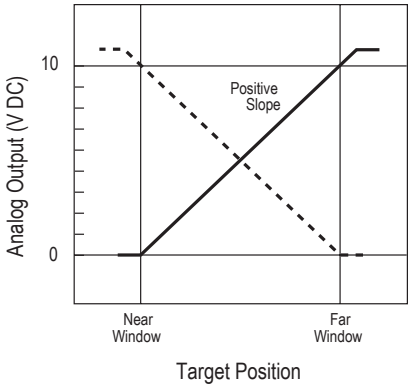

The analog voltage output tracks slightly beyond the upper window limit (up to 10.2 V)

1. Access the slope setting.

Method	Action		Result
Push Button	Navigate: **MENU › A_OUT › Slope**		"**Slope**" and the current setting display.
Remote Input	a. Double-pulse the remote input to enter setup mode. b. Single-pulse the remote input to access **A_OUT Slope**.	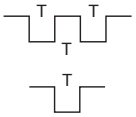	a. "**REMOTE SETUP**" displays. b. "**Slope**" and the current setting display.

2. Set the slope.

Method	Action		Result
Push Button	a. Use **Down** and **Up** to change the slope between Positive and Negative. b. Press **Enter** to save the selection.		a. The selection flashes rapidly on the display. b. The selection is saved and the sensor returns to "**A_OUT Slope**".
Remote Input	Positive slope: Single-pulse the remote input Negative slope: Double-pulse the remote input	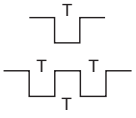	The selection flashes rapidly on the display, and the sensor returns to Run mode.

Loss of Signal

The LossSig option sets the Analog Output value used by the sensor during a loss of signal. When a signal is restored, measurement resumes.

Navigate: **Menu › A_Out › LossSig**

Remote Input: Not available

Default: 3.5 mA (0 V)

© Banner Engineering Corp. All rights reserved.
www.bannerengineering.com

Option	Description
3.5 mA (0 V)	The Analog Output switches to this value 2 seconds after a loss of signal. When advanced measurements are enabled, the Analog Output is updated to this value immediately upon the release of the trigger input. For Voltage models, this is 0 V. (Default)
20.5 mA (10.5 V)	The Analog Output switches to this value 2 seconds after a loss of signal. When advanced measurements are enabled, the Analog Output is updated to this value immediately upon the release of the trigger input. For Voltage models, this is 10.5 V.
Hold	The Analog Output holds the last value indefinitely during a loss of signal. When advanced measurements are enabled, the last value is held across the triggered measurement periods.

The Range advanced measurement behavior is affected by the Loss of Signal option. For additional information on advanced measurements, see "Trigger" on page 36. The Range advanced measurement tracks a maximum and a minimum during the measurement period, and calculates the range as follows:

```
Range = maximum distance – minimum distance
```

If the maximum and/or minimum measurements are outside of the taught setpoints, the Loss of Signal option determines how the range is calculated.

Option	Sensor Behavior in Range Mode
3.5 mA (0 V)	If the maximum or minimum measurement is outside of the taught setpoints, the sensor outputs 3.5 mA (0 V) to indicate an out-of-range measurement.
20.5 mA (10.5 V)	If the maximum or minimum measurement is outside of the taught setpoints, the sensor outputs 20.5 mA (10.5 V) to indicate an out-of-range measurement.
Hold	The sensor limits the maximum and minimum measurements to not exceed the taught setpoints.

Averaging

Use this menu to set the number of measurements that are averaged together for the analog output. Increasing the averaging improves repeatability, but increases the total response speed. The default is 16. The filter can be set to 1, 2, 4, 8, 16, 32, 64, 128, 256, or 512. Use the table to determine the total response speed.

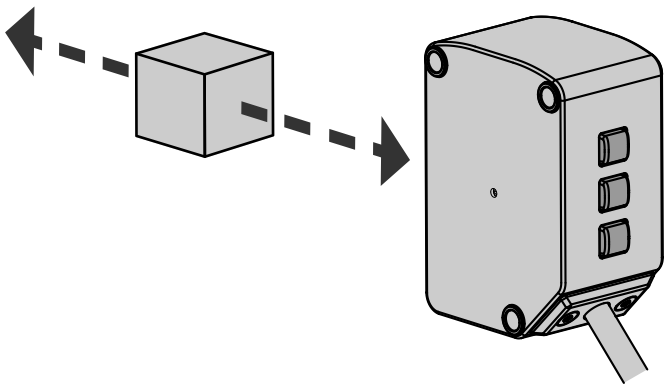

Response Speed

Base Measurement Rate (ms)	Averaging (ms)									
	1	2	4	8	16	32	64	128	256	512
0.25	0.5	1	1.5	3.5	6.5	13	26	50	99	195.5
1	1.25	2.5	4.5	9.5	18.5	37	74	146	291	579.5

Continued on page 24

© Banner Engineering Corp. All rights reserved.
www.bannerengineering.com

Continued from page 23

Base Measurement Rate (ms)	Averaging (ms)									
	1	2	4	8	16	32	64	128	256	512
2	2.25	4.5	8.5	17.5	34.5	69	138	274	547	1091.5
4	4.25	8.5	16.5	33.5	66.5	133	266	530	1059	2115.5

Lateral Entry Response

	Base Measurement Rate (ms)	Lateral Entry Response (ms)
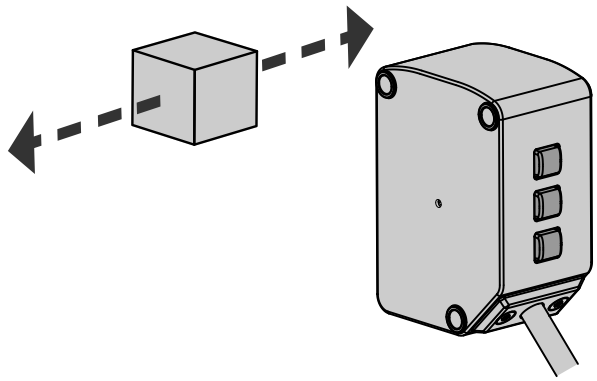	0.25	3
	1	10
	2	12.5
	4	20

When lateral entry needs to be considered, the lateral entry response is added to calculate the total response time.

NOTE: The LM uses a dynamic measurement rate, so these response times are worst-case.

Discrete Output Menu (D_OUT)

Use this menu to view or change

- Setpoints
- Midpoint
- Mode
- Timers
- Polarity

© Banner Engineering Corp. All rights reserved.
www.bannerengineering.com

Discrete Output Menu Map

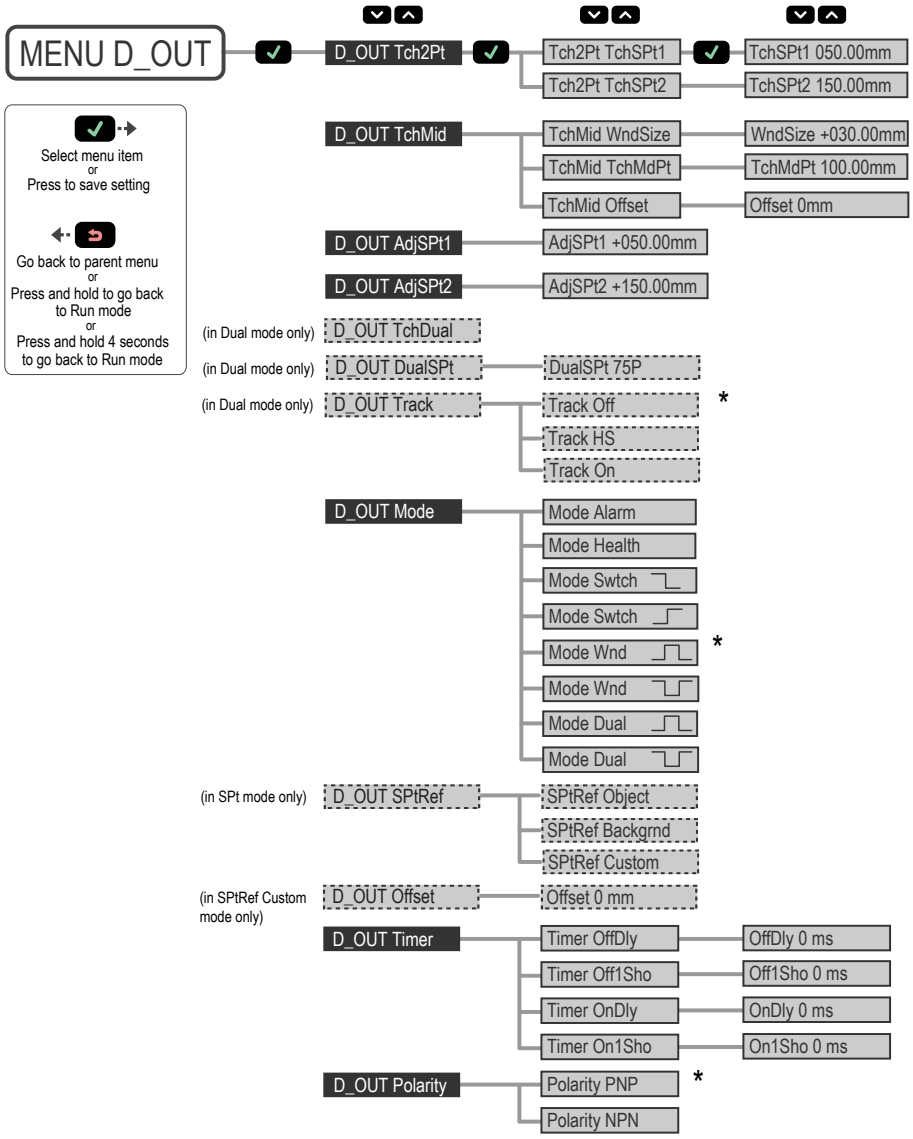

Two-Point TEACH

The TchSpt1 and TchSPt2 options teach the desired switch points. When using the buttons, the switch points can be taught independently. Both values must be taught when using the remote input.

> **NOTE:** When in Switch mode, use "TEACH Switch Point" on page 29. When in Dual mode, use "Dual (Intensity + Distance) Mode" on page 44.

Navigate: MENU › D_OUT › Tch2Pt › TchSPt1 and navigate: **MENU › D_OUT › Tch2Pt › TchSPt2**

Remote Input: Available

Button Instructions

1. Present the target.

Action	Result
Present the target. The target must be within the sensor's range.	The target's analog output measurement and distance measurement value display.

© Banner Engineering Corp. All rights reserved.
www.bannerengineering.com

2. Access the TEACH mode and TEACH the sensor.

Action	Result
Navigate: **MENU › D_OUT › Tch2Pt › TchSPt1** OR Navigate: **MENU › D_OUT › Tch2Pt › TchSPt2**	The selected TEACH mode and "**Teaching**" display while the sensor is being taught. **TEACH Accepted** The new value is shown on the second line of the display and flashes before it is saved and the sensor returns to the parent menu. **TEACH Not Accepted** "**FAIL**" and a warning message display, and the sensor returns to the parent menu.

3. Repeat steps 1 to 2 for the other switch point, if desired.

Remote Input Instructions

1. Access the TEACH mode.

Action		Result
Single-pulse the remote input.		"**RMT TCH**" and the current switch point value displays.

2. Present the target.

Action	Result
Present the switch point one target.	"**RMT TCH**" and the target's measurement value display.

3. TEACH the sensor.

Action		Result
Double-pulse the remote input.	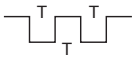	"**TchSPt1 Teaching**" displays while the sensor is being taught. **TEACH Accepted** The new value displays on the second line of the display, flashes, and the sensor goes to "**TchSPt2**" and the current measurement value. **TEACH Not Accepted** "**FAIL**" flashes, the sensor returns to step 2, and "**RMT TCH**" displays.

4. Present the target.

Action	Result
Present the switch point two target.	"**TchSPt2**" and the target's measurement value display.

5. TEACH the sensor.

© Banner Engineering Corp. All rights reserved.
www.bannerengineering.com

Action		Result
Single-pulse the remote input.		"**TchSPt2 Teaching**" displays while the sensor is being taught. **TEACH Accepted** The new value displays on the second line of the display, flashes, and the sensor returns to Run mode. **TEACH Not Accepted** "**FAIL**" flashes, the sensor returns to step 2, and "**RMT TCH**" displays.

Midpoint TEACH

The Midpoint TEACH uses both the window size and the TEACH midpoint to determine the actual measurement window. For example, a window of 200 mm with a midpoint of 600 mm places the measurement window from 500 mm to 700 mm.

Window and Midpoint Example

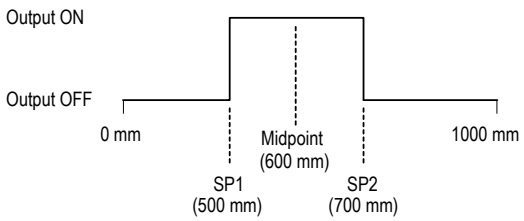

To use Midpoint TEACH:

1. Set the window size.
2. Set the measurement window using "TEACH Midpoint" on page 28.

The Discrete Output Midpoint TEACH and the Analog Output Midpoint TEACH are independent settings.

Window Size

The **D_OUT › TchMid › WndSize** option sets the window size that the Midpoint TEACH uses to set the setpoint one and setpoint two thresholds.

The taught surface must be inside the defined sensing range, and at least one setpoint (with offset applied, if any) must be located within the sensing range.

The Discrete Output window size is a different setting than the Analog Output window size when defined using the push buttons.

Parameters	LM80 and LM150
Discrete Output Window Size Minimum	0.1 mm
Discrete Output Window Size Maximum	90 mm
Discrete Output Range	50 mm to 150 mm
Discrete Output Default Window Size	30 mm

Navigate: MENU › D_OUT › TchMid › WndSize

Remote Input: Available

1. Access the setup mode.

Method	Action		Result
Push Button	Navigate: **MENU › D_OUT › TchMid › WndSize**.		"**WndSize**" and the current window size value display.
Remote Input	a. Double-pulse the remote input to enter setup mode. b. Three-pulse the remote input to enter window size mode.	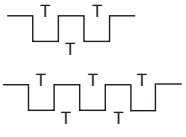	a. "**REMOTE SETUP**" displays. b. "**WndSize**" and the current value display.

2. Set the window size.

© Banner Engineering Corp. All rights reserved.
www.bannerengineering.com

<table>
<tr><th>Method</th><th>Action</th><th>Result</th></tr>
<tr><td>Push Button</td><td>a. Use Down and Up to set the desired window size—the value changes in increments of 0.2 mm.
b. Press Enter to save the new value.</td><td>a. "WndSize" and the new value display.
b. The new value flashes and returns to "TchMid WndSize".</td></tr>
<tr><td>Remote Input (Sets A_OUT and D_OUT window Size)</td><td>Pulse the remote input 1 to 6 times to select the desired window size.
<table><tr><th rowspan="2">Pulses</th><th>Window Size</th></tr><tr><th>LM80 and LM150</th></tr><tr><td>1</td><td>1 mm</td></tr><tr><td>2</td><td>5 mm</td></tr><tr><td>3</td><td>10 mm</td></tr><tr><td>4</td><td>30 mm</td></tr><tr><td>5</td><td>50 mm</td></tr><tr><td>6</td><td>90 mm</td></tr></table></td><td>The new value flashes and the sensor returns to Run mode.</td></tr>
</table>

TEACH Midpoint

The TchMdPt option sets the midpoint that determines the actual measurement window.

Navigate: MENU › D_OUT › TchMid › TchMdPt

Remote Input: Available

Button Instructions

1. Present the target.

Action	Result
Present the target.	The target's analog output measurement and distance measurement value display.

2. Access the TEACH midpoint mode and TEACH the sensor.

Action	Result
Navigate: **MENU › D_OUT › TchMid › TchMdPt**	"**TchMdPt Teaching**" displays while the sensor is being taught. **TEACH Accepted** The new value is shown on the second line of the display and flashes before it is saved and the sensor returns to "**TchMid TchMdPt**". **TEACH Not Accepted** "**FAIL**" and a warning message display, and the sensor returns to "**TchMid TchMdPt**".

Remote Input Instructions

1. Access the TEACH mode.

Action		Result
Single-pulse the remote input.		"**RMT TCH**" and the current measurement value display.

2. Present the target.

© Banner Engineering Corp. All rights reserved.
www.bannerengineering.com

Action	Result
Present the target.	"**RMT TCH**" and the target's measurement value display.

3. TEACH the sensor.

Action		Result
Five-pulse the remote input.	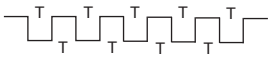	"**TchMdpt Teaching**" displays while the sensor is being taught. **TEACH Accepted** The new value displays on the second line of the display, flashes, and the sensor returns to Run mode. **TEACH Not Accepted** "**FAIL**" and a warning message display, the sensor returns to step 2, and "**RMT TCH**" displays.

Window TEACH Offset

Use the **D_OUT › TchMid › Offset** menu to set an offset from the taught distance used during a Midpoint TEACH. By default, the value is 0 mm because the window is centered around the taught distance. A positive offset value always shifts the window towards the sensor.

Adjust Switch Point One

The AdjSPt1 option manually adjusts the value of the switch point one threshold for the Discrete Output when the sensor is in Window mode. The value is adjustable within the sensor's range. It is required to maintain the minimum window size between switch points. This menu is not available when the sensor is in Switch, Alarm, or Health mode.

Navigate: **MENU › D_OUT › AdjSPt1**

Remote Input: Not available

Default: 50 mm

Adjust Switch Point Two

The AdjSPt2 option manually adjusts the value of the switch point two threshold for the Discrete Output when the sensor is in Window mode. The value is adjustable with the sensor's range. It is required to be maintain the minimum window size between switch points. This menu is not available when the sensor is in Switch, Alarm, or Health mode.

Navigate: **MENU › D_OUT › AdjSPt2**

Remote Input: Not available

Default: 150 mm

TEACH Switch Point

The TchSPt option teaches the distance at which the switch point threshold is placed when the Discrete Output is in Switch mode. This menu is not available when the sensor is in Window, Alarm, or Health mode.

Navigate: **MENU › D_OUT › TchSPt**

Remote Input: Available

Button Instructions

1. Present the target.

© Banner Engineering Corp. All rights reserved.
www.bannerengineering.com

Action	Result
Present the target. The target must be within the sensor's range.	The target's analog output measurement and distance measurement value display.

2. Access the switch point TEACH mode and TEACH the sensor.

Action	Result
Navigate: **MENU › D_OUT › TchSPt**	"**TchSPt Teaching**" displays while the sensor is being taught. **TEACH Accepted** The new value is shown on the second line of the display and flashes before it is saved and the sensor returns to "**D_OUT TchSPt**". **TEACH Not Accepted** "**FAIL**" and a warning message display, and the sensor returns to "**D_OUT TchSPt**".

Remote Input Instructions

1. Verify the sensor is in Switch mode.
2. Access the TEACH mode.

Action		Result
Single-pulse the remote input.		"**RMT TCH**" and the current measurement value display.

3. Present the target.

Action	Result
Present the target.	"**RMT TCH**" and the target's measurement value display.

4. TEACH the sensor.

Action		Result
Five-pulse the remote input.	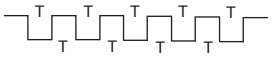	"**TchSPt Teaching**" displays while the sensor is being taught. **TEACH Accepted** The new value displays on the second line of the display, flashes, and the sensor returns to Run mode. **TEACH Not Accepted** "**FAIL**" flashes, the sensor returns to step 3, and "**RMT TCH**" displays.

Adjust Switch Point

The AdjSPt option manually adjusts the value of the switch point threshold for the discrete output when the sensor is in Switch mode. The value is adjustable within the sensor's range. This menu is not available when the sensor is in Window, Alarm, or Health mode.

Navigate: **MENU › D_OUT › AdjSPt**

Remote Input: Not available

Default: 50 mm

© Banner Engineering Corp. All rights reserved.
www.bannerengineering.com

Mode

The Mode option sets the output to the desired mode.

Navigate: **MENU › D_OUT › Mode**

Remote Input: Available

Default: Wnd ⎍ mode

The following table describes the sensor modes.

Mode	Description
Alarm	**Alarm Mode:** The Discrete Output is Off while a target is detected by the sensor at any distance. When a loss of signal occurs, the Discrete Output is On. This mode has no associated thresholds.
Health	**Health Mode:** The Discrete Output is On while a target is detected by the sensor at any distance. When a loss of signal occurs, the Discrete Output is Off. This mode has no associated thresholds.
Swtch ⎎	**Switch Mode:** The Discrete Output is On while a target is detected nearer than the switch point threshold. When a target is detected farther than the switch point threshold or the signal is lost, the Discrete Output is Off.
Swtch ⎏	**Switch Mode:** The Discrete Output is Off while a target is detected nearer than the switch point threshold. When a target is detected farther than the switch point threshold or the signal is lost, the Discrete Output is On.
Wnd ⎍	**Window Mode:** The Discrete Output is On while a target is detected between the SPt1 and SPt2 thresholds. (Default) When a target is detected outside the SPt1 and SPt2 thresholds or the signal is lost, the Discrete Output is Off.
Wnd ⎏	**Window Mode:** The Discrete Output is Off while a target is detected between the SPt1 and SPt2 thresholds. When a target is detected outside the SPt1 and SPt2 thresholds or the signal is lost, the Discrete Output is On.
Dual ⎍	**Dual Mode:** The Discrete Output is Off while a target is below the DualSPt threshold. When a the target is above the DualSPt threshold, the Discrete Output is On.
Dual ⎏	**Dual Mode:** The Discrete Output is on while a target is below the DualSPt threshold. When a the target is above the DualSPt threshold, the Discrete Output is Off.

Remote Input Instructions

1. Access the setup mode.

Action		Result
Double-pulse the remote input.	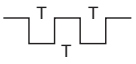	"**REMOTE SETUP**" displays.

2. View the current mode.

Action		Result
Double-pulse the remote input.	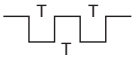	The current mode displays.

3. Program the sensor.

© Banner Engineering Corp. All rights reserved.
www.bannerengineering.com

<table>
<tr><th>Action</th><th>Result</th></tr>
<tr><td>Pulse the remote input 1 to 6 times to select the desired mode.
<table><tr><th>Pulses</th><th></th><th>Mode</th></tr><tr><td>1</td><td></td><td>Alarm</td></tr><tr><td>2</td><td></td><td>Health</td></tr><tr><td>3</td><td>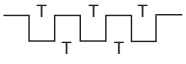</td><td>Swtch</td></tr><tr><td>4</td><td></td><td>Swtch</td></tr><tr><td>5</td><td>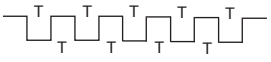</td><td>Wnd</td></tr><tr><td>6</td><td></td><td>Wnd</td></tr></table></td><td>The selected mode flashes and the sensor returns to Run mode.</td></tr>
</table>

TEACH Dual

The TchDual option teaches a target as the reference distance and intensity for dual mode. This menu is not available when the sensor is in Window, Setpoint, Alarm, or Health mode.

Navigate: MENU › D_OUT › TchDual

Remote Input: Available

1. Present the target.

Method	Action	Result
Push Button	Present the reference target.	The target's match percentage displays

2. Access the TEACH midpoint mode and TEACH the sensor.

Method	Action	Result
Push Button	Navigate to the **MENU › D_OUT › TchDual** menu.	"TchDual Teaching" displays while the sensor is being taught. TEACH Accepted— The new value is shown on the second line of the display and flashes before it is saved and the sensor returns to the **D_OUT TchDual** menu. TEACH Not Accepted— "FAIL" and a warning message display, and the sensor returns to the **D_OUT TchDual** menu.

DualSPt

The DualSPt option manually adjusts the value of the dual mode percent match threshold for the discrete output when the sensor is in dual mode. The value is adjustable between 0 and 100 percent. This menu is not available when the sensor is in Window, Set point Alarm, or Health mode.

Navigate: MENU › D_OUT › DualSPt

Remote Input: Not available

Default: 75P

© Banner Engineering Corp. All rights reserved.
www.bannerengineering.com

Tracking

When operating in dual mode, the Adaptive Tracking Algorithm adjusts the switching thresholds (distance and intensity) around a taught reference surface. Adaptive tracking adjusts for small variations in the reference surface to maintain a consistent 100P (100%) on the display and to ensure reliable detection. The track menu is not available when the sensor is in Window, Set point Alarm, or Health mode.

Adjustment of the thresholds only occurs when the reference surface is visible to the senor (that is, no target is present). The Adaptive Tracking Algorithm can reduce or eliminate the need to periodically re-teach the sensor as environmental conditions change around the sensor.

Enable or disable the Adaptive Tracking Algorithm from the sensor menu. Note that the menu is available when the D_Out is set to dual mode. OFF disables adaptive tracking and is the default selection. On enables adaptive tacking at the standard speed. HS is high speed adaptive tracking. The appropriate speed depends on the application.

OFF disables the Adaptive Tracking Algorithm—OFF prevents the sensor from adjusting the thresholds around the taught reference surface while the sensor is in dual mode. The sensor will not adapt to or learn any target. Environmental changes may cause the displayed value to deviate from 100P (100%) over time. A periodic re-teach of the reference surface may be required to restore the displayed value to 100P if this is important to the application.

There are some cases in which disabling adaptive tracking is useful. For example, disable adaptive tracking if the target passes very slowly through the sensing beam, if the target might stop while partially blocking the beam, and if the environmental conditions are stable.

ON enables the Adaptive Tracking Algorithm at the standard speed—ON is recommended for many applications detecting low contrast targets. Standard adaptive tracking adjusts the thresholds around slowly changing background and environmental conditions. It adjusts the sensor for stable detection when the environment changes due to gradual dust accumulation, machine vibration, or ambient temperature changes which influence the signal from the reference surface. Standard adaptive tracking will not easily adapt to or learn slow moving, low contrast targets (for example, clear targets entering and exiting the beam over approximately 2 seconds).

HS enables the Adaptive Tracking Algorithm at high speed— HS is an optional adaptive tracking setting used with dual mode. Use high speed adaptive tracking when the signal from the reference surface changes quickly due to unstable environmental conditions and high contrast and high speed targets are being detected. High speed adaptive tracking adjusts the sensor for stable detection in challenging environmental conditions such as dust accumulation, machine vibration, ambient temperature changes, or a non-stable reference surface (for example, a running belt or web which influences the signal from the reference surface). For example, if the signal from the reference surface changes by 10% due to environmental effects, high speed adaptive tracking adjusts the displayed value back to 100P (100%) over 2 to 3 seconds.

High speed adaptive tracking addresses certain applications where the reference surface is not stable, but the sensor must detect high speed and high contrast targets reliably. With high speed adaptive tracking there is the potential for the sensor to adapt the thresholds to slow moving or low contrast targets, leading to missed detection events. If the detection events are generating small signal changes of similar magnitude to the background changes, detection problems are likely.

Stabilize the reference surface to avoid this problem.

Switch Point Reference (SPtRef)

The SPtRef menu only displays for a discrete output when it is set to switch mode. This setting cannot be changed with remote teach.

- **Object** (default). Object mode automatically optimizes the switching threshold just past the taught distance, farther away from the sensor's face.
- **Background**. Background mode automatically optimizes the switching threshold just in front of the taught distance, closer to the sensor's face.
- **Custom**. Custom mode allows the user to define the location of the switching threshold relative to a taught distance using the Offset menu that appears only after selecting Custom Switch Point Reference.

In **Object** or **Background**, the distance between the taught surface and the switching threshold varies depending on measurement stability. Use object mode when teaching an object if a change in state is required when the object is no longer present. Use background mode when teaching background so that the output state changes when a new object is in front of the background.

Navigate: **MENU › D_OUT › SPtRef**

Remote Input: Not available

© Banner Engineering Corp. All rights reserved.

Default: Object

Switch Point TEACH Offset

Use this menu to set an offset from the taught distance after a switch point TEACH, if SPtRef is set to Custom.

By default, the value is 0 mm. A positive offset value always shifts the threshold towards the sensor.

Navigate: MENU › D_OUT › TchMd › Offset

Remote Input: Not available

Default: 0 mm

Timer

The Timer option sets the delays and timers. On/Off Delays and On/Off One-Shot timers can be programmed between 1 to 9999 ms (a value of 0 disables the delay/timer). The following figure defines how the delays/timers affect the output behavior.

Navigate: MENU › D_OUT › Timer

Remote Input: not available

Default: 0 ms for all timers

Delays/Timers

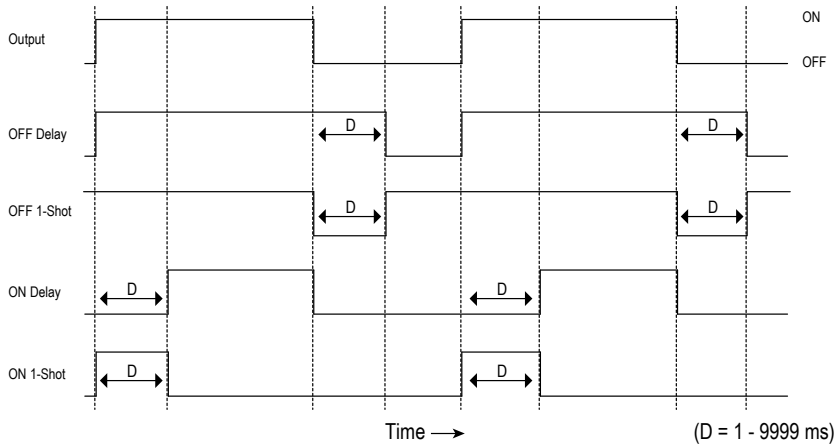

Some combinations of delays/timers are not allowed. The programming menu automatically disables invalid combinations of delays/timers. The following table shows the allowable combinations of delays/timers.

	Off Delay	Off One-Shot Timer	On Delay	On One-Shot Timer
Off Delay (OffDly)	OK	OK	OK	N/A
Off One-Shot Timer (Off1Sho)	OK	OK	N/A	N/A
On Delay (OnDly)	OK	N/A	OK	OK
On One-Shot Timer (On1Sho)	N/A	N/A	OK	OK

Polarity

The Polarity option sets the discrete output polarity to either PNP (current sourcing) or NPN (current sinking). The physical wiring of the sensor and the sensor polarity setting must match.

Navigate: **MENU › D_OUT › Polarity**

Remote Input: Not available

Default: PNP

The polarity of the discrete output is tied to the input wire polarity. Changing either menu selection changes both.

© Banner Engineering Corp. All rights reserved.
www.bannerengineering.com

Input Menu (INPUT)

Use this menu to view or change the:

- Multi-function input type
- Active state of the remote input

Input Menu Map

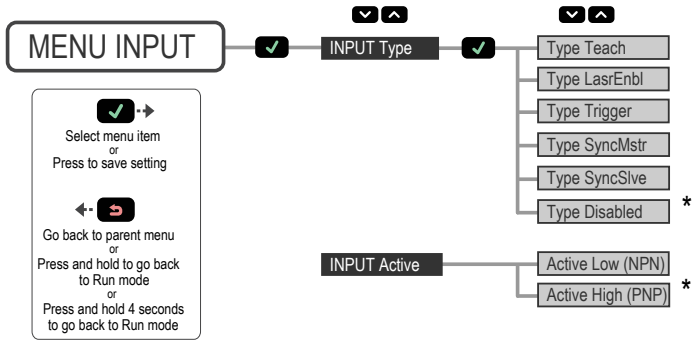

The input polarity is tied to the discrete output polarity. Changing either menu selection changes both.

Input Type

The Type option sets the input type.

Navigate: **MENU › INPUT › Type**

Remote Input: Not available

Default: Disabled

Input Type	Description
Teach	The remote input is used to TEACH and program the sensor.
LasrEnbl	The remote input is used to control when the laser emitter is On/Off.
Trigger	The remote input is used to trigger advanced measurements To enable advanced measurements, the Input Type option must be set to Trigger (see "Trigger" on page 36).
SyncMstr	The remote input is used as the Master Sync output to an attached Slave sensor (see "Sync Master/ Slave" on page 41).
SyncSlve	The remote input is used as the Slave Sync input from an attached Master sensor (see "Sync Master/ Slave" on page 41).
Disabled	The remote input is disabled. (Default)

Input Active

The Active option sets the active state of the remote input. Use the Active options to change the active input to Low or High.

Navigate: **MENU › INPUT › Active**

Remote Input: Not available

Default: High (PNP)

Input Active	Description
Low (NPN)	The remote input detects low (0 V) inputs and high-to-low transitions. (Default)
High (PNP)	The remote input detects high (V+) inputs and low-to-high transitions.

The polarity of the discrete output is tied to the input wire polarity. Changing either menu selection changes both.

© Banner Engineering Corp. All rights reserved.
www.bannerengineering.com

Measure Menu (MEASURE)

Use this menu to view or change the:

- Speed
- Trigger

Measure Menu Map

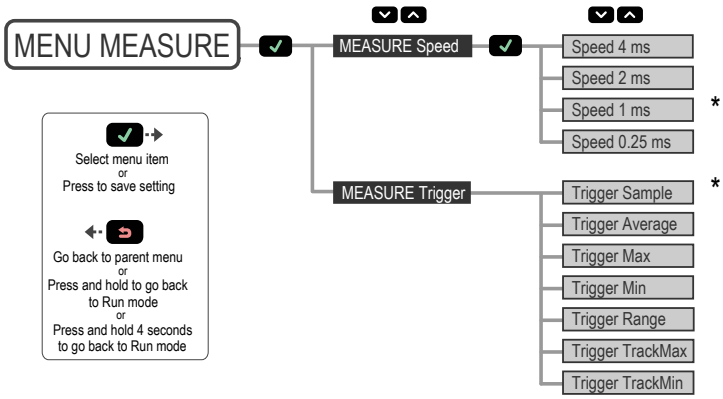

Speed

The Speed option sets the speed at which the measurement is calculated. The total response speed depends upon the measurement rate setting and the averaging setting.

A slower speed increases the response time of the sensor but increases the excess gain and may improve part detection and measurement reliability of a very dark targets or shiny targets at steep angles.

Navigate:**MENU › MEASURE › Speed**

Remote Input: Not available

Default: 1 ms

For the response time and lateral entry time, see "Averaging" on page 23.

Lateral Entry Example

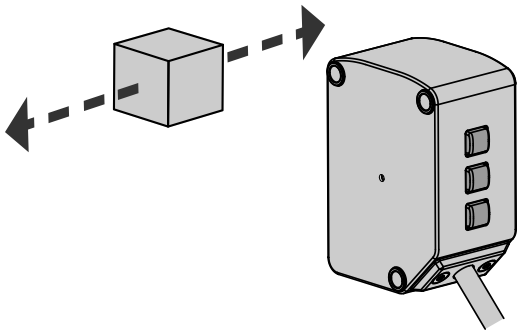

Trigger

The Trigger option sets the advanced measurement that is calculated when a trigger event is detected on the remote input. The analog output updates with the new advanced measurement on each trigger event. To use these Trigger options, the sensor Input Type option must be set to Trigger; see "Input Type" on page 35.

Navigate: **MENU › MEASURE › Trigger**

Remote Input: Not available

Default: Sample

Trigger	Description
Sample	The current distance at the time of the trigger event. (Default) The Analog Output tracks the sample values during the measuring period.

Continued on page 37

© Banner Engineering Corp. All rights reserved.
www.bannerengineering.com

Continued from page 36

Trigger	Description
Average	The average distance since the last trigger event.
Maximum (Max)	The maximum distance since the last trigger event.
Minimum (Min)	The minimum distance since the last trigger event.
Range	The difference between the maximum and minimum distance since the last trigger event. For additional information on the Range measurement behavior when the maximum or minimum distance is outside of the taught setpoints, see "Loss of Signal" on page 22.
TrackMax	The maximum distance since the last trigger event. The Analog Output tracks new maximum values during the measurement period.
TrackMin	The minimum distance since the last trigger event. The Analog Output tracks new minimum values during the measurement period.

Sample

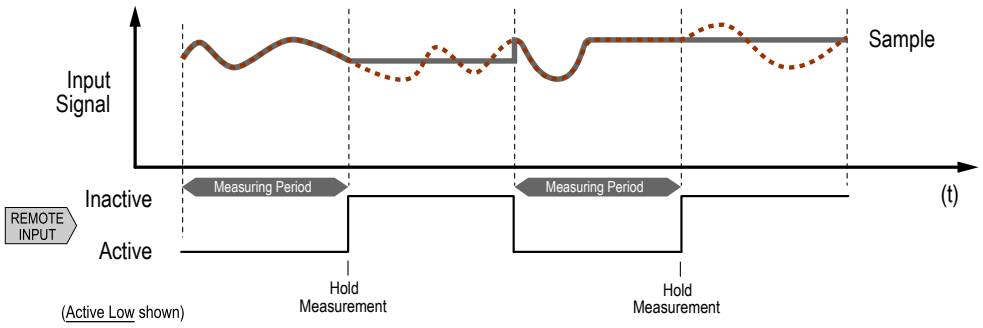

Average

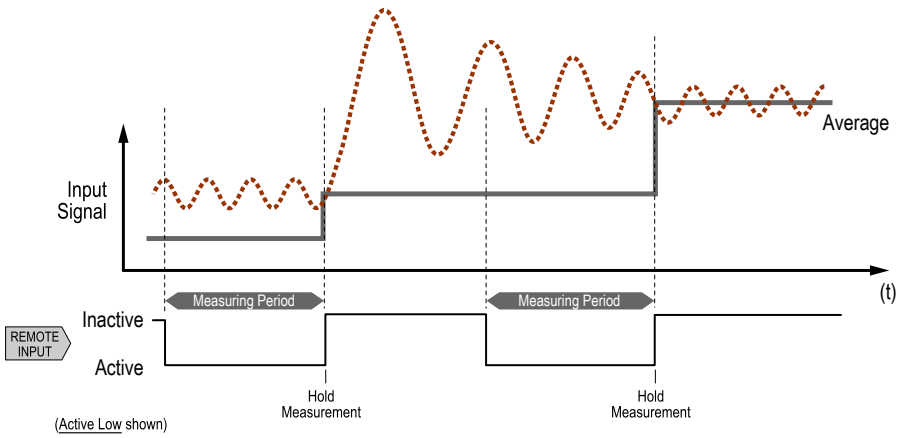

© Banner Engineering Corp. All rights reserved.
www.bannerengineering.com

Maximum and Minimum

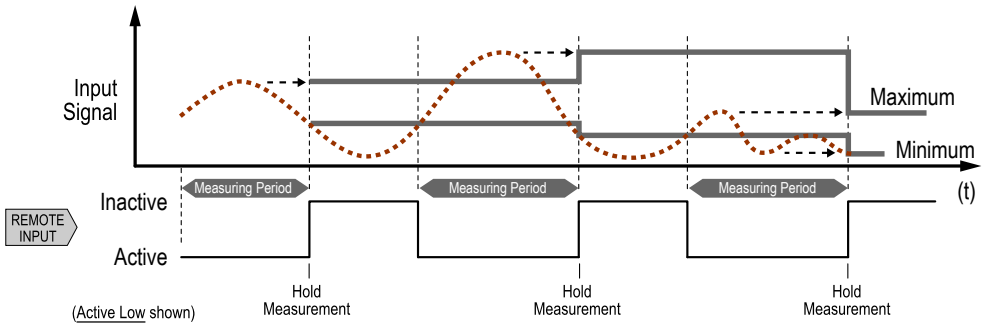

Range

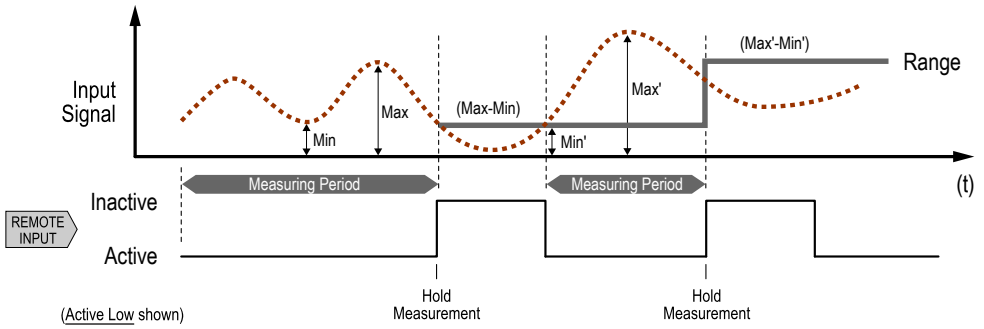

Track Maximum and Track Minimum

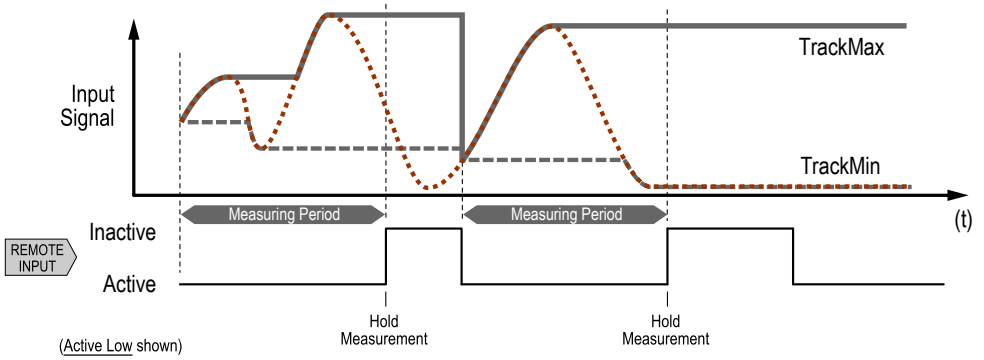

© Banner Engineering Corp. All rights reserved.
www.bannerengineering.com

Display Menu (DISPLAY)

Use this menu to view or change the:

- Display units
- Display orientation
- Sleep mode settings

Display Menu Map

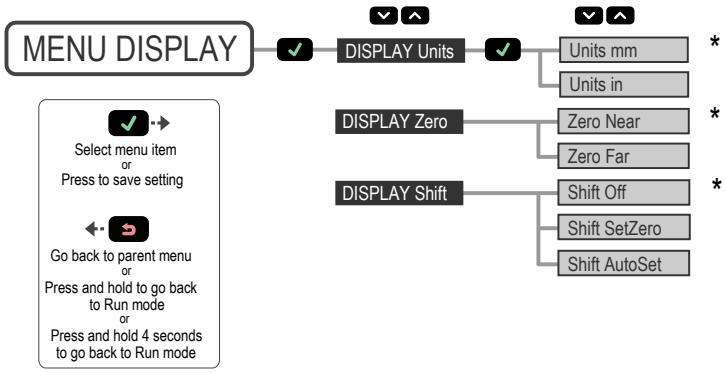

Units

The Units option sets the displayed units to millimeters (mm) or inches (in).

Navigate: **MENU › DISPLAY › Units**

Remote Input: Not available

Default: mm

Zero and Shift

Use the **Display Zero** menu to select the zero reference location. The default is , 0 = the face of the sensor.

- Near—0 = the face of the sensor; the measurement increases further from the sensor
- Far—0 = maximum range; the measurement increases closer to the sensor

Use the **Display Shift** menu to select whether the sensor shifts the zero reference location based on the last TEACH process. The default is Off (0).

- Off—0 = the face of the sensor or the maximum range, depending on the zero setting
- SetZero—Sets the current distance as its new zero reference location. This process is independent of teaching analog or discrete set points.
- AutoSet—Shifts the zero reference location at the taught distance during any analog or discrete setting teach.

Shown are three examples of how changes to the zero and shift settings affect what distance readout displays when in 2-pt TEACH mode. Changes to the zero setting affect the direction in which the distance increases. Turning the shift setting on sets the taught location as the reference point for any distance measurement.

© Banner Engineering Corp. All rights reserved.
www.bannerengineering.com

Example Zero and Shift settings

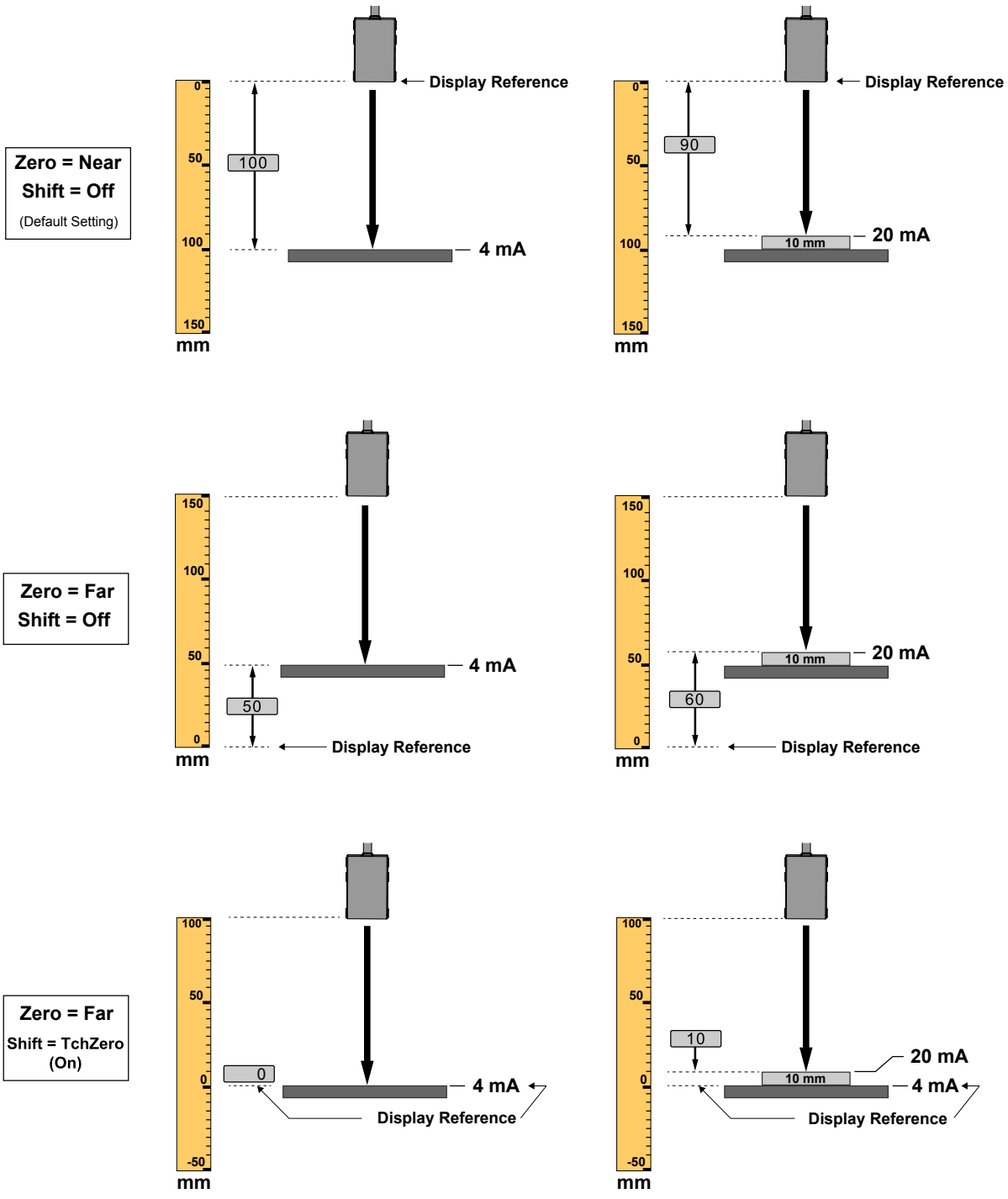

Information Menu (INFO)

Use this menu to view model, part number (P/N), serial number (S/N), firmware version (Version), and the communication version used with the RSD (CommVer). Select one of these options to view specific information for your sensor. This information is read-only.

Navigate: **MENU › INFO**

Remote Input: Not available

© Banner Engineering Corp. All rights reserved.
www.bannerengineering.com

Information Menu Map

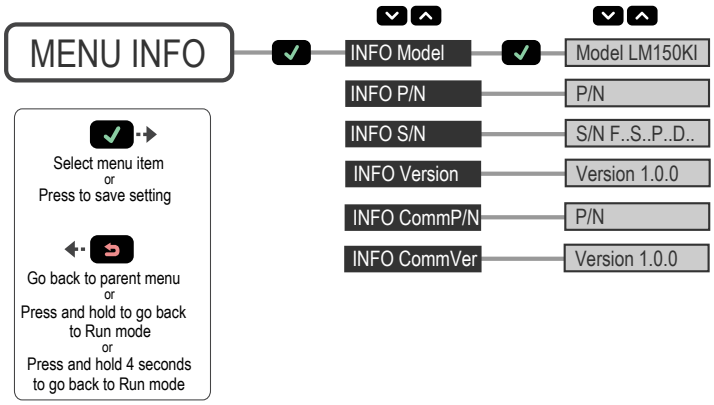

Reset Menu (RESET)

Use this menu to restore the sensor to the factory default settings.

Navigate: **MENU › RESET.** Select Yes to apply the factory defaults; select No to return to the Reset option without changing any sensor settings.

Remote Input: Eight-pulse the remote input

Reset Menu Map

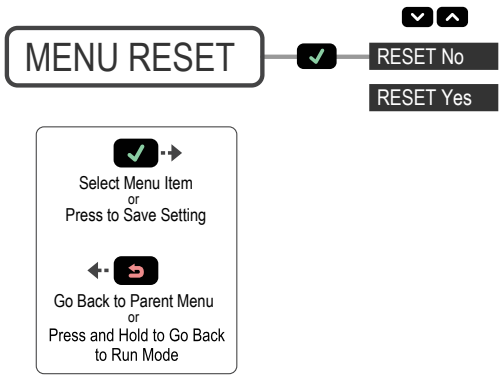

Sync Master/Slave

Two LM sensors may be used together in a single sensing application. To eliminate crosstalk between the two sensors, configure one sensor to be the master and one to be the slave. In this mode, the sensors alternate taking measurements and the response speed triples.

1. Configure the first sensor as the master; navigate: **MENU › INPUT › Type › SyncMstr.**
2. Configure the second sensor as the slave; navigate: **MENU › INPUT › Type › SyncSlve.**
3. Connect the gray (input) wires of the two sensors together.

© Banner Engineering Corp. All rights reserved.
www.bannerengineering.com

Chapter Contents

TEACH Analog Output and Discrete Output Switch Points Together 42
TEACH Analog Output and Discrete Output Midpoints Together 43

Chapter 4 Additional Remote TEACH Procedures

TEACH Analog Output and Discrete Output Switch Points Together

Use the following procedure to teach identical Analog Output and Discrete Output switch points at the same time using the remote input. This feature is not available using the buttons.

1. Access the TEACH mode.

Action		Result
Single-pulse the remote input.		"**RMT TCH**" and the current measurement value display.

2. Present the target.

Action		Result
Present the switch point one target.		"**RMT TCH**"and the target's measurement value display.

3. TEACH the sensor.

Action		Result
Three-pulse the remote input.	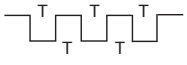	"**TchA&D1 Teaching**" displays while the sensor is being taught. **TEACH Accepted** The new value displays on the second line of the display, flashes, and then "**TchA&D2**" and the current measurement value display. **TEACH Not Accepted** "**FAIL**" flashes, the sensor returns to step 2, and "**RMT TCH**" displays.

4. Present the target.

Action		Result
Present the switch point two target.		"**TchA&D2**" and the target's measurement value display.

5. TEACH the sensor.

© Banner Engineering Corp. All rights reserved.
www.bannerengineering.com

Action		Result
Single-pulse the remote input.		"**TchA&D2 Teaching**" displays while the sensor is being taught. **TEACH Accepted** The new value displays on the second line of the display, flashes, and the sensor returns to Run mode. **TEACH Not Accepted** "**FAIL**" flashes, the sensor returns to step 2, and "**RMT TCH**" displays.

TEACH Analog Output and Discrete Output Midpoints Together

Use the following procedure to teach an identical Analog Output 12 mA (5 V) point and Discrete Output midpoint (switch point) at the same time using the remote input. This feature is not available using the buttons. Note that if the window sizes and/or offsets were set independently (using the buttons), the windows taught using the following procedure could be different.

When the Discrete Output is set to Switch Mode, the SPt TEACH is executed with SPtRef=Custom and Offset=0 mm.

1. Access the TEACH mode.

Action		Result
Single-pulse the remote input.		"**RMT TCH**" and the current measurement value display.

2. Present the target.

Action	Result
Present the midpoint (switch point) target.	"**RMT TCH**"and the target's measurement value display.

3. TEACH the sensor.

Action		Result
Six-pulse the remote input.		"**TchA&D Teaching**" displays while the sensor is being taught. **TEACH Accepted** The new value displays on the second line of the display, flashes, and the sensor returns to Run mode. **TEACH Not Accepted** "**FAIL**" flashes, the sensor returns to step 2, and "**RMT TCH**" displays.

© Banner Engineering Corp. All rights reserved.
www.bannerengineering.com

Chapter Contents

Dual (Intensity + Distance) Mode 44
Dual Mode Reference Surface Considerations 44
Dual Mode Considerations for Clear and Transparent Object Detection 45
Sensor Menu Full Map 47

Chapter 5 Additional Information

Dual (Intensity + Distance) Mode

Dual TEACH mode, dual intensity + distance window, expands the applications the LM can solve by combining distance-based detection with light intensity thresholds. In dual TEACH mode, the user teaches a fixed reference surface, and the sensor compares intensity and distance readings against the reference surface it was taught. After teaching the reference target, the displayed value is calibrated to 100P, or a 100% match. When an object enters the sensor's field of view, the degree of consistency with the reference surface becomes lower and causes a change in sensor output.

In dual mode, you can detect when the target is present at the right distance and when it returns the right amount of light. This is useful in error-proofing applications where you need to know not only that the part is present (distance), but also that it is the correct part (intensity).

In dual mode, the LM requires a reference surface (far left). Once taught, the distance and intensity of the reference surface are recorded and used as a baseline. A user-adjustable switching threshold is set, and changes in distance and/or intensity outside the switching threshold creates a sensor output change. The example uses a 90% (90P) match condition with a 10% change in intensity and/or distance from the reference surface required to change the output state. The default-switching threshold is a 75% match to the reference condition (75P); this sets the threshold 25% from the distance and intensity of the reference surface.

Dual Mode Example

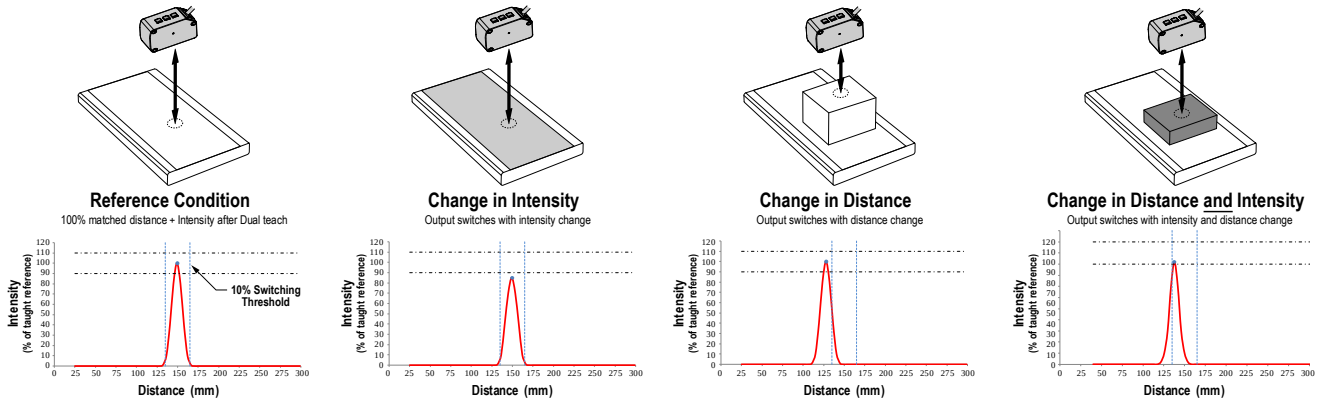

The LM sensor can be taught non-ideal reference surfaces, such as surfaces outside of the sensor's range, very dark surfaces, or even empty space. These situations may enable applications requiring a long range detection but are subject to typical diffuse mode detection challenges.

Dual Mode Reference Surface Considerations

Optimize reliable detection by applying these principals when selecting your reference surface, positioning your sensor relative to the reference surface, and presenting your target. The robust detection capabilities of the LM allows successful detection even under non-ideal conditions in many cases. Typical reference surfaces are metal machine frames, conveyor side rails, or mounted plastic targets. Contact Banner Engineering if you require assistance setting up a stable reference surface in your application.

1. Select a reference surface with these characteristics where possible:
    - Matte or diffuse surface finish
    - Fixed surface with no vibration

© Banner Engineering Corp. All rights reserved.
www.bannerengineering.com

- Dry surface with no build-up of oil, water, or dust

2. Position the reference surface within the sensor's sensing range.
3. Position the target to be detected as close to the sensor as possible, and as far away from the reference surface as possible.
4. Angle the sensing beam relative to the target and relative to the reference surface 10 degrees or more.

Dual Mode Considerations for Clear and Transparent Object Detection

The LM is able to detect the very small changes caused by transparent and clear objects. A transparent object can be detected either by a change in intensity or distance.

The LM sensor can be taught non-ideal reference surfaces, such as surfaces outside of the sensor range or very dark surfaces. Teaching non-ideal reference surfaces may enable applications other than transparent or clear object detection, but best results for transparent or clear object detection require a stable reference surface.

The display shows the match percentage to the taught reference point. The user adjustable switch point defines the sensitivity and the output switches when the match percentage to the reference point crosses the switch point. Your specific application may require fine tuning of the switch point.

Example mounting considerations

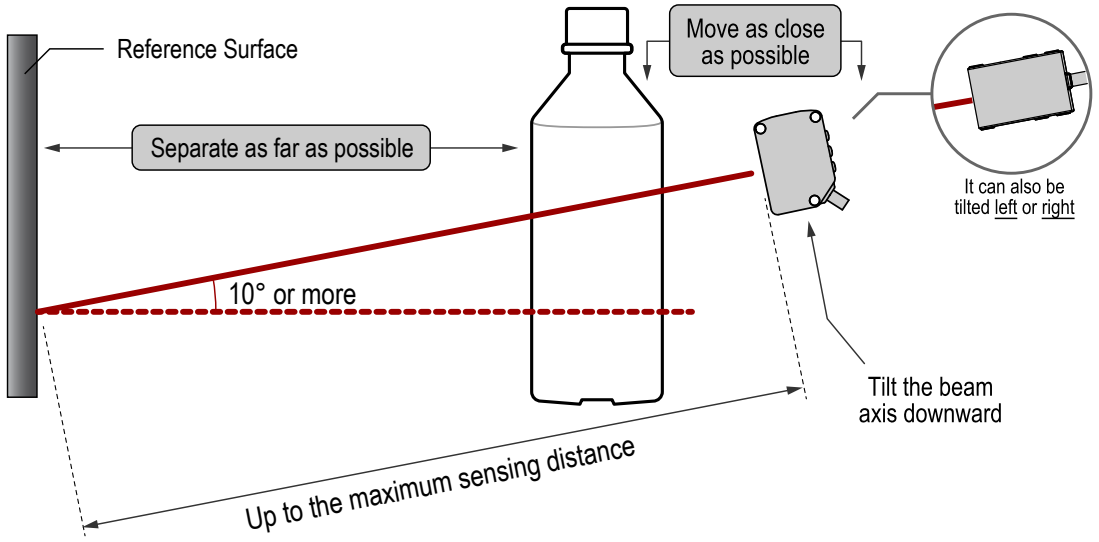

© Banner Engineering Corp. All rights reserved.
www.bannerengineering.com

Common problems and solutions for detecting clear objects

PROBLEM:
The object is close to the reference surface

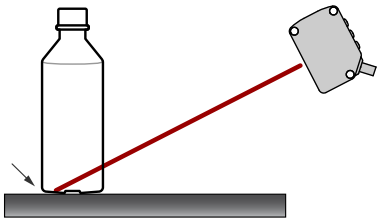

SOLUTION:
Move the target closer to the sensor

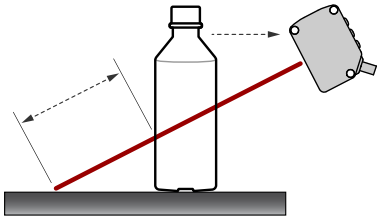

PROBLEM:
The sensor is far from the object

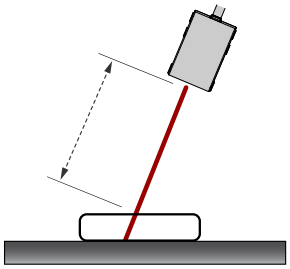

SOLUTION:
Move the sensor closer to the target

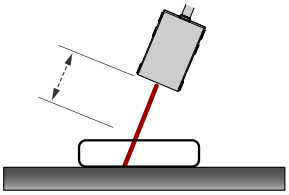

© Banner Engineering Corp. All rights reserved.
www.bannerengineering.com

Sensor Menu Full Map

From Run mode, press **Enter** to enter the top-level menu system (A_OUT, D_OUT, INPUT, MEASURE, etc.).

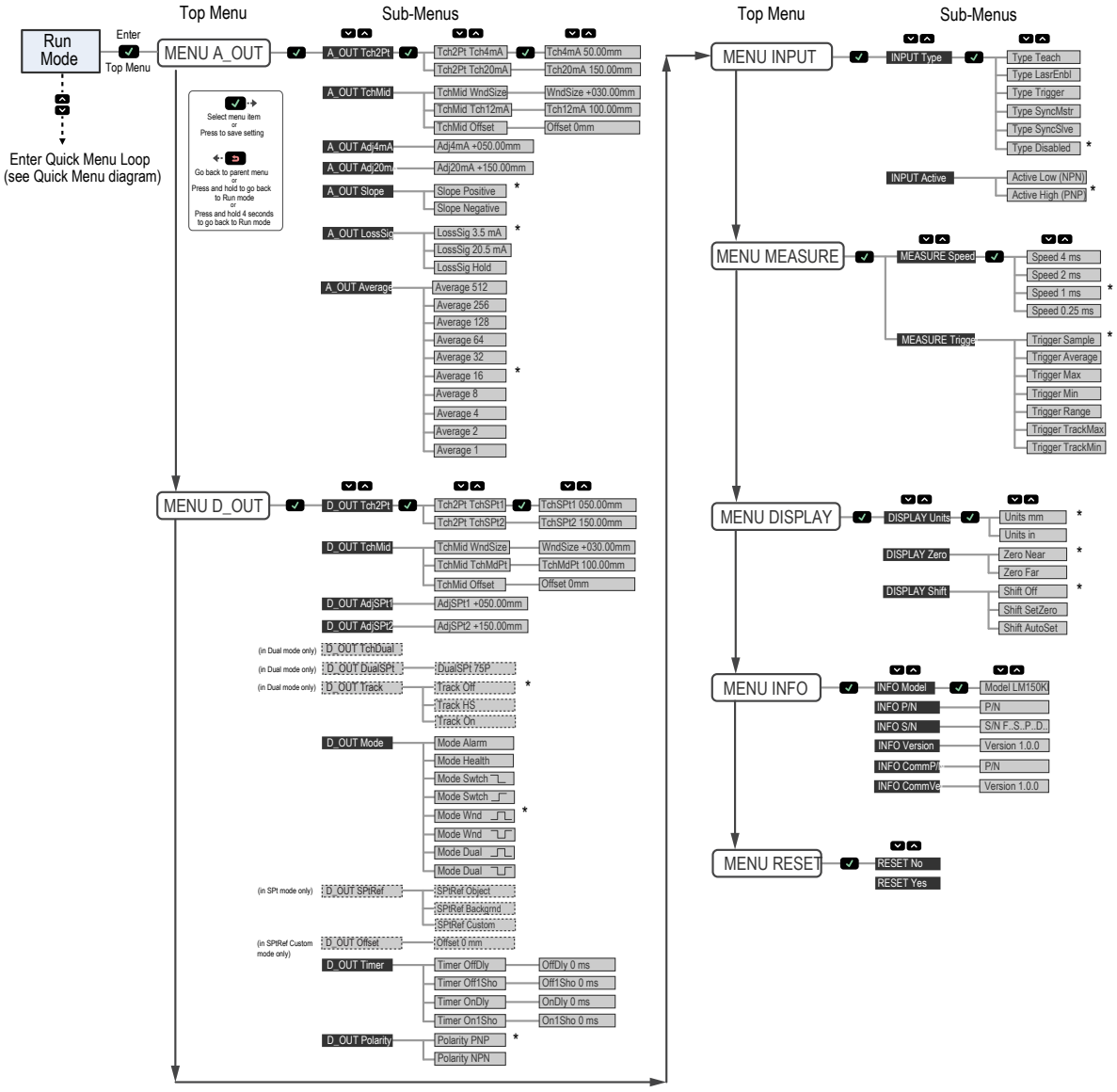

* Factory default setting

© Banner Engineering Corp. All rights reserved.
www.bannerengineering.com

Chapter Contents

RSD1 Product Description 48
Brackets 48
Cordsets 48

Chapter 6 Accessories

RSD1 Product Description

Remote Display and Configuration Tool

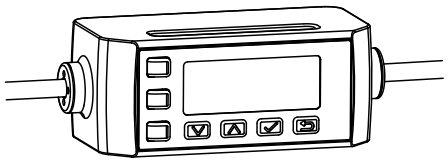

- Allows for configuration of remote sensor heads
- Easy to set up and use with a 2-line, 8-character display
- Ability to display live distance measurement
- Ability to save up to 6 unique configurations
- Not required for continuous operation of configured sensor(s)

Models

Model	Output A and B	Connection
RSD1QP	Configurable	Integral 150 mm (6 in) PVC cable with 5-pin M12 quick disconnect connector

Brackets

All measurements are listed in millimeters, unless noted otherwise. The measurements provided are subject to change.

SMBLML1

- Right-angle bracket
- 12 gauge stainless steel

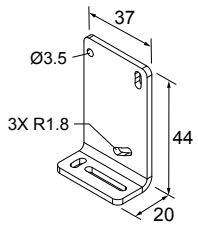

SMBLML2

- Right-angle bracket
- 12 gauge stainless steel

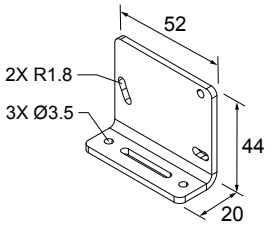

Cordsets

All measurements are listed in millimeters, unless noted otherwise. The measurements provided are subject to change.

© Banner Engineering Corp. All rights reserved.
www.bannerengineering.com

5-pin Single-Ended M12 Female Shielded Cordsets (datasheet p/n 236184)				
Model	**Length**	**Dimensions (mm)**	**Pinout (Female)**	
BC-M12F5-22-1-SF	1 m (3.28 ft)	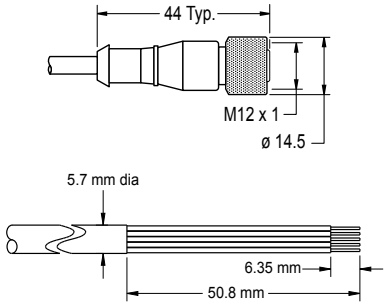	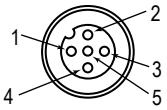	1 = Brown 2 = White 3 = Blue 4 = Black 5 = Gray
BC-M12F5-22-2-SF	2 m (6.56 ft)			
BC-M12F5-22-5-SF	5 m (16.4 ft)			
BC-M12F5-22-8-SF	8 m (26.25 ft)			
BC-M12F5-22-10-SF	10 m (30.81 ft)			
BC-M12F5-22-15-SF	15 m (49.2 ft)			

5-pin Single-Ended M12 Female Right-Angle Shielded Cordsets (datasheet p/n 236184)				
Model	**Length**	**Dimensions (mm)**	**Pinout (Female)**	
BC-M12F5A-22-1-SF	1 m (3.28 ft)	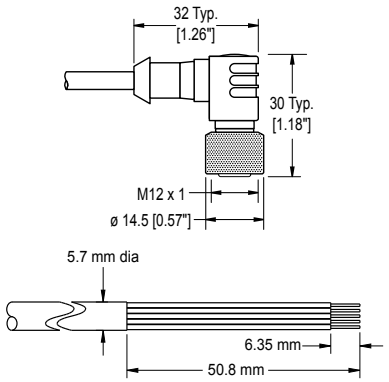	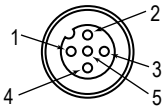	1 = Brown 2 = White 3 = Blue 4 = Black 5 = Gray
BC-M12F5A-22-2-SF	2 m (6.56 ft)			
BC-M12F5A-22-5-SF	5 m (16.4 ft)			
BC-M12F5A-22-8-SF	8 m (26.25 ft)			
BC-M12F5A-22-10-SF	10 m (30.81 ft)			
BC-M12F5A-22-15-SF	15 m (49.2 ft)			

5-Pin Double-Ended M12 Female to M12 Male Shielded Cordset				
Model	**Length "L1"**	**Style**	**Pinout (Male)**	**Pinout (Female)**
MQDEC3-503SS	0.91 m (2.99 ft)	Female Straight/Male Straight	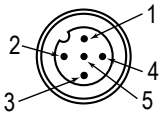	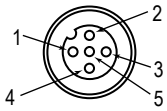
MQDEC3-506SS	1.83 m (6 ft)			
MQDEC3-515SS	4.58 m (15 ft)			
MQDEC3-530SS	9.2 m (30.2 ft)			
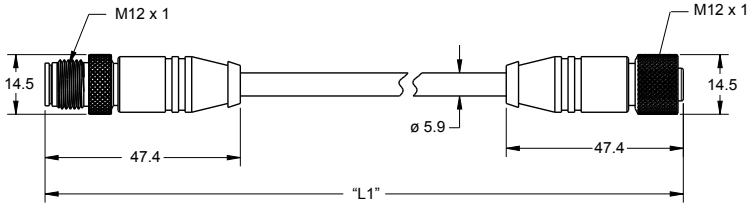			1 = Brown 2 = White 3 = Blue	4 = Black 5 = Gray

© Banner Engineering Corp. All rights reserved.
www.bannerengineering.com

Chapter Contents

Factory Default Settings 50
Troubleshooting 51
Clean Sensor with Compressed Air and Isopropyl Alcohol 51
Repairs 51
Contact Us 51
Banner Engineering Corp Limited Warranty 52

Chapter 7 Product Support and Maintenance

Factory Default Settings

Analog Output Settings	LM80	LM150
Adjust 4 mA (0 V)	40 mm	50 mm
Adjust 20 mA (10 V)	80 mm	150 mm
Loss of Signal	3.5 mA (0 V)	3.5 mA (0 V)
Slope	Positive	Positive
Window Size	30 mm	30 mm

Discrete Output Settings	LM80	LM150
Adjust Switch Point One	40 mm	50 mm
Adjust Switch Point Two	80 mm	150 mm
Mode	Wnd	Wnd
Polarity	PNP	PNP
Timer	0 ms	0 ms
Window Size	30 mm	30 mm

Input Settings	Value
Input Active	Low
Input Type	Disabled

Measure Settings	Value
Speed	Medium
Trigger	Sample

Display Settings	Value
Sleep	Disabled
Units	mm
Zero	Near
Shift	Off
View	Normal

© Banner Engineering Corp. All rights reserved.
www.bannerengineering.com

Troubleshooting

Message/Indicator	Description	Resolution
Fail/Out of Range	The TEACH failed, the target is out of range. The target might have moved out of range after the TEACH process began.	TEACH the target within the measurement range.
Fail/OfSt Out of Range	The TEACH failed. The target is in range but the offset value caused the setpoint(s) to be out of range.	Adjust the offset value or target distance to keep the setpoint(s) within the measurement range.
MIN Wnd xx mm (xx in)	The adjusted or taught window size is too small; the minimum window size is displayed.	The sensor automatically adjusts the window size to maintain the minimum window size and completes the adjust or TEACH operation.
xxxx < NEAR	The threshold (xxxx) is less than the minimum sensing range. xxxx could be 4mA Pt (0V Pt), 20mA Pt (10V Pt) or SPt1.	The desired window size is maintained, but the usable portion of the window is restricted to be within the defined sensing range.
xxxx > FAR	The threshold (xxxx) is greater than the maximum sensing range. xxxx could be 4mA Pt (0V Pt), 20mA Pt (10V Pt) or SPt2.	The desired window size is maintained, but the usable portion of the window is restricted to be within the defined sensing range.
OutRnge	The target is out of range, too dark, or the sensor is not measuring.	Move the target within the measurement range.
< NEAR	During RUN mode the target is detected, but is inside the NEAR measuring range.	The sensor can reliably detect targets up to the face of the sensor, and the Discrete Output state is valid. The Analog Output cannot be used to measure distances inside the NEAR measuring range.
Power LED is flashing green	The sensor input is set to laser enable and the input is not active.	See "Input Type" on page 35.
All LEDs are flashing	The laser shuts off, the Power LED flashes green, the Output LEDs flash amber at 1 Hz, and the display is blank. The sensor has experienced a fault.	Contact Banner Engineering to resolve.
Type Sync Slave	The slave mode sensor does not see the master's pulse.	Make sure that the master mode sensor is configured and functioning properly. Check the input wire connection between the master and slave.

Clean Sensor with Compressed Air and Isopropyl Alcohol

Handle the sensor with care during installation and operation. Sensor windows soiled by fingerprints, dust, water, oil, etc. create stray light that may degrade the peak performance of the sensor.

Blow the window clear using filtered, compressed air, then clean as necessary using 70% isopropyl alcohol and cotton swabs or water and a soft cloth. Do not use any other chemicals for cleaning.

Repairs

Contact Banner Engineering for troubleshooting of this device. **Do not attempt any repairs to this Banner device; it contains no field-replaceable parts or components.** If the device, device part, or device component is determined to be defective by a Banner Applications Engineer, they will advise you of Banner's RMA (Return Merchandise Authorization) procedure.

> **IMPORTANT:** If instructed to return the device, pack it with care. Damage that occurs in return shipping is not covered by warranty.

Contact Us

Banner Engineering Corp. | 9714 Tenth Avenue North | Plymouth, MN 55441, USA | Phone: + 1 888 373 6767

For worldwide locations and local representatives, visit www.bannerengineering.com.

© Banner Engineering Corp. All rights reserved.
www.bannerengineering.com

Banner Engineering Corp Limited Warranty

Banner Engineering Corp. warrants its products to be free from defects in material and workmanship for one year following the date of shipment. Banner Engineering Corp. will repair or replace, free of charge, any product of its manufacture which, at the time it is returned to the factory, is found to have been defective during the warranty period. This warranty does not cover damage or liability for misuse, abuse, or the improper application or installation of the Banner product.

THIS LIMITED WARRANTY IS EXCLUSIVE AND IN LIEU OF ALL OTHER WARRANTIES WHETHER EXPRESS OR IMPLIED (INCLUDING, WITHOUT LIMITATION, ANY WARRANTY OF MERCHANTABILITY OR FITNESS FOR A PARTICULAR PURPOSE), AND WHETHER ARISING UNDER COURSE OF PERFORMANCE, COURSE OF DEALING OR TRADE USAGE.

This Warranty is exclusive and limited to repair or, at the discretion of Banner Engineering Corp., replacement. **IN NO EVENT SHALL BANNER ENGINEERING CORP. BE LIABLE TO BUYER OR ANY OTHER PERSON OR ENTITY FOR ANY EXTRA COSTS, EXPENSES, LOSSES, LOSS OF PROFITS, OR ANY INCIDENTAL, CONSEQUENTIAL OR SPECIAL DAMAGES RESULTING FROM ANY PRODUCT DEFECT OR FROM THE USE OR INABILITY TO USE THE PRODUCT, WHETHER ARISING IN CONTRACT OR WARRANTY, STATUTE, TORT, STRICT LIABILITY, NEGLIGENCE, OR OTHERWISE.**

Banner Engineering Corp. reserves the right to change, modify or improve the design of the product without assuming any obligations or liabilities relating to any product previously manufactured by Banner Engineering Corp. Any misuse, abuse, or improper application or installation of this product or use of the product for personal protection applications when the product is identified as not intended for such purposes will void the product warranty. Any modifications to this product without prior express approval by Banner Engineering Corp will void the product warranties. All specifications published in this document are subject to change; Banner reserves the right to modify product specifications or update documentation at any time. Specifications and product information in English supersede that which is provided in any other language. For the most recent version of any documentation, refer to: www.bannerengineering.com.

For patent information, see www.bannerengineering.com/patents.

© Banner Engineering Corp. All rights reserved.

LinkedIn

X (formerly Twitter)

Facebook



© 2025. All rights reserved.
www.bannerengineering.com