EM-F-7G Features

- Safety Extension Module provides additional safety outputs for a Primary Safety Device (for example, an E-stop safety module or a two-hand control module)
- One-channel control
- Features four 6-amp switching channels for connection to control-reliable machine power interrupt circuits
- Contact status outputs are provided for connection to the Primary Safety Device's monitoring input
- 24 V AC/DC operation
- Housed in a narrow, 22.5 mm (0.9 in) DIN-rail-mountable module

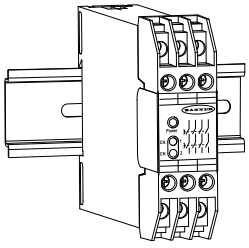

EM-F-7G Overview

The EM-F-7G Safety Extension Module provides additional forced-guided (positive-guided) relay contacts for a Primary Safety Device, such as an E-stop Safety module or a two-hand control module. Controlled by a safety output of the Primary Safety Device, the EM-F-7G Module provides four safety outputs.

These outputs may be connected to control-reliable machine power interrupt circuits. Each of the four Extension Module safety outputs is a series connection of two forced-guided relay contacts.

The safety outputs of the Safety Extension Module follow the action of the safety output from the Primary Safety Device which controls it, within a switching delay time of approximately 35 milliseconds. The Extension Module's four safety outputs are each rated for up to 250 V AC/DC at up to 6 A.

The Safety Extension Module offers an output circuit at terminals Y1 and Y2 which provides K1 and K2 contact status information for connection to the monitoring input of the Primary Safety Device. This monitoring circuit prevents the Primary Safety Device from being reset if contacts of either K1 or K2 of the Extension Module fail in a shorted condition.

The Safety Extension Module has indicators for input power (green), and status of internal relays (K1 and K2, both green). There are no adjustments and no user-serviceable parts.

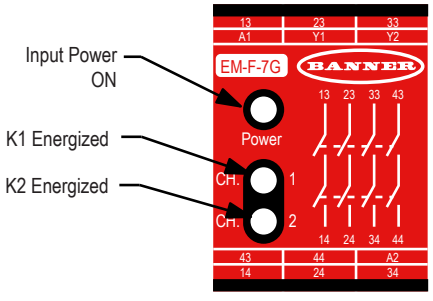

WARNING:

- **Not a stand-alone safeguarding device**
- Failure to properly safeguard hazards according to a risk assessment, local regulations, and applicable standards might lead to serious injury or death.
- This Banner Engineering Corp. device is considered complementary equipment that is used to augment safeguarding that limits or eliminates an individual's exposure to a hazard without action by the individual or others.

Important... Read this before proceeding!

The user is responsible for satisfying all local, state, and national laws, rules, codes, and regulations relating to the use of this product and its application. Banner Engineering Corp. has made every effort to provide complete application, installation, operation, and maintenance instructions. Please contact a Banner Applications Engineer with any questions regarding this product.

The user is responsible for making sure that all machine operators, maintenance personnel, electricians, and supervisors are thoroughly familiar with and understand all instructions regarding the installation, maintenance, and use of this product, and with the machinery it controls. The user and any personnel involved with the installation and use of this product must be thoroughly familiar with all applicable standards, some of which are listed within the specifications. Banner Engineering Corp. makes no claim regarding a specific recommendation of any organization, the accuracy or effectiveness of any information provided, or the appropriateness of the provided information for a specific application.

Standards Applicable to the Use of Primary Safety Devices

This list of standards is included as a convenience for users of this Banner device. Inclusion of these standards does not imply that the device complies specifically with any standard, other than those specified in the Specifications section of this document.

U.S. Standards

ANSI B11 Standards for Machine Tools Safety

ANSI B11.0 Safety of Machinery

Original Instructions
06-Aug-25

© Banner Engineering Corp. All rights reserved.
www.bannerengineering.com

55799
p/n: 55799 Rev. J

ПРОМЭЛЕКТРОНИКА/ sales@prom-elec.com

ANSI B11.19 Performance Requirements for Risk Reduction Measures: Safeguarding and Other Means of Reducing Risk

NFPA 79 Electrical Standard for Industrial Machinery

ANSI/RIA R15.06 Safety Requirements for Industrial Robots and Robot Systems

International Standards

ISO 12100 Safety of Machinery – General Principles for Design – Risk Assessment and Risk Reduction

ISO 13849-1 Safety of Machinery – Safety-Related Parts of Control Systems – Part 1: General Principles for Design

IEC 62061 Safety of Machinery – Functional Safety of Safety-Related Control Systems

EN 60204-1 Electrical Equipment of Machines Part 1: General Requirements

- Also, acquire a type "C" standard for your specific machinery

EM-F-7G Specifications

Supply Voltage and Current
A1-A2: 24 V AC/DC, ±10%, 10% maximum ripple on DC

Supply Protection Circuitry
Protected against reverse polarity and transient voltages

Output Response Time
35 milliseconds typical

Input Requirements
Input from the Primary Safety Device must be capable of switching 40 to 100 mA at 13 to 27 V AC/DC

Status Indicators
Three green LED indicators: Power ON, K1 energized, and K2 energized

Construction
Polycarbonate housing

Output Configuration
Four output channels: Each channel is a series connection of two forced-guided (positive-guided) safety relay contacts – $AgSnO_2$

Contact ratings:

Maximum voltage: 250 V AC/DC
Maximum current: 6 A AC/DC (at specified operating temperature)
Minimum current: 30 mA at 10 V DC
Maximum power: 1500 VA, 150 W
Mechanical life: 10,000,000 operations
Electrical life: 100,000 at full resistive load

Feedback contact rating (Y1-Y2): 250 V AC/DC at 3 A

Transient suppression is recommended when switching inductive loads. Install suppressors across the load. Never install suppressors across output contacts (see Warning, Arc Suppressors).

Mounting
Mounts to standard 35 mm DIN-rail track

Environmental Rating
NEMA 1; IP20

Safety Extension Module must be installed inside an enclosure rated NEMA 3 (IEC IP54) or better

Vibration Resistance
10 to 55 Hz at 0.35 mm displacement per IEC 68-2-6

Operating Temperature
0 °C to +50 °C (+32 °F to +122 °F)

Application Notes
There are no adjustments and no user-serviceable parts

Certifications

Banner Engineering BV
Park Lane, Culliganlaan 2F bus 3
1831 Diegem, BELGIUM

Turck Banner LTD Blenheim House
Blenheim Court
Wickford, Essex SS11 8YT
GREAT BRITAIN

IND. CONT. EQ.
447Y

Required Overcurrent Protection

WARNING: Electrical connections must be made by qualified personnel in accordance with local and national electrical codes and regulations.

Overcurrent protection is required to be provided by end product application per the supplied table.

Overcurrent protection may be provided with external fusing or via Current Limiting, Class 2 Power Supply.

Supply wiring leads < 24 AWG shall not be spliced.

For additional product support, go to www.bannerengineering.com.

Supply Wiring (AWG)	Required Overcurrent Protection (A)	Supply Wiring (AWG)	Required Overcurrent Protection (A)
20	5.0	26	1.0
22	3.0	28	0.8
24	2.0	30	0.5

© Banner Engineering Corp. All rights reserved.
www.bannerengineering.com

EM-Fx-7G Dimensions

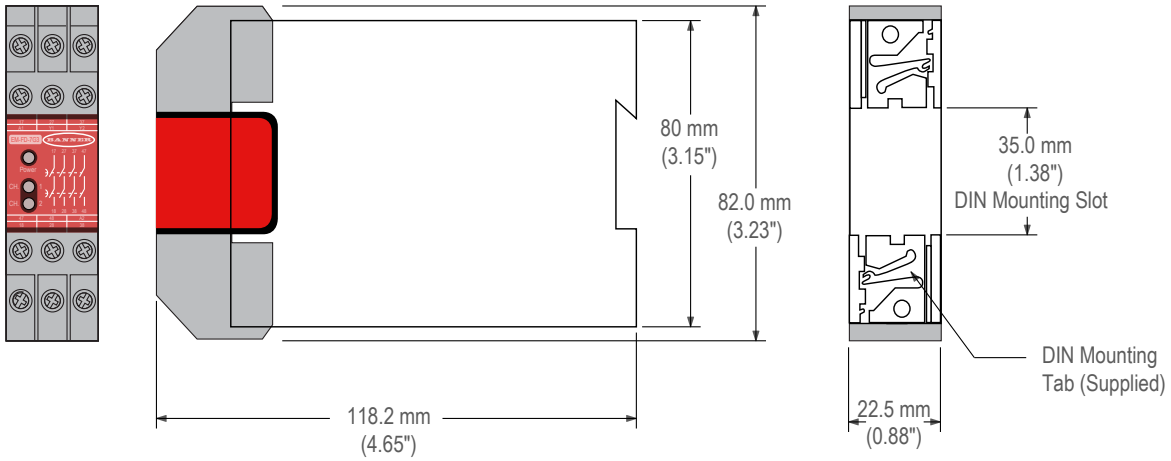

Installation Instructions

Primary Safety Device Requirements

An EM-F-7G Module is driven by one safety output channel of a Primary Safety Device. For higher risk applications, the design of the Primary Safety Device must meet OSHA/ANSI control reliability requirements or ISO/IEC/EN Category 3 or 4, Performance Level d or e. The appropriate safety circuit integrity can be determined via a risk assessment (e.g. ANSI B11.0, ISO 12100) and as described by ANSI B11.19, ISO 13849-1 or other relevant standards. The EM-F-7G Module must be used only with a Primary Safety Device which has a dedicated input for feedback monitor contacts (see "Electrical Installation" on page 3 wiring diagram).

The output channel of the Primary Safety Device must meet the following requirements:

- Include two (or more) redundant, normally open forced-guided (positive-guided) contacts,
- Be self-monitored to result in a safe (open) condition in the event of a contact failure, and
- Be capable of switching 40 to 100 mA at 13 to 27 V AC/DC.

WARNING:
Not for Use As a Stand-Alone Safety Relay

1. DO NOT connect E-stop switches, 2-hand control switches, safety interlock switches, or similar devices directly to this Extension Module.
2. ALWAYS connect terminals Y1 and Y2 of this Extension Module to the monitoring input of the Primary Safety Device that controls it (see wiring diagram).

This Safety Extension Module does not have the circuitry required to perform a self-check. A single fault inside the unit or in external devices like switches or E-stop buttons connected to the unit can go undetected and create an unsafe condition. Failure to properly connect this Safety Extension Module to a control-reliable Primary Safety Device could result in serious injury or death.

Mechanical Installation

The EM-F-7G Module must be installed inside an enclosure.

It is not designed for exposed wiring. It is the user's responsibility to house the EM-F-7G Module in an enclosure with NEMA 3 (IEC IP54) rating, or better. The EM-F-7G Module mounts directly to standard 35 mm DIN rail.

Heat Dissipation Considerations: For reliable operation, ensure that the operating specifications are not exceeded. The enclosure must provide adequate heat dissipation so that the air closely surrounding the EM-F-7G Module does not exceed the maximum operating temperature stated in the Specifications. Methods to reduce heat build-up include venting, forced airflow (for example, exhaust fans), adequate enclosure exterior surface area, and spacing between modules and other heat sources.

Electrical Installation

Electrical installation must be made by qualified personnel[1] and must comply with NEC (National Electrical Code), NFPA 79 or IEC/EN 60204-1, and all applicable local standards. It is not possible to give exact wiring instructions for a device that interfaces to a multitude of

[1] A Qualified Person is a person who, by possession of a recognized degree or certificate of professional training, or who, by extensive knowledge, training and experience, has successfully demonstrated the ability to solve problems relating to the subject matter and work.

© Banner Engineering Corp. All rights reserved.
www.bannerengineering.com

machine control configurations. The following guidelines are general in nature. Perform a risk assessment to ensure appropriate application, interfacing/hookup, and risk reduction (see ANSI B11.0 or ISO 12100).

The output contacts of the Extension Module have no delay function. They typically will open within 35 milliseconds after the controlling contacts coming from the Primary Safety Device open.

WARNING:

- **Risk of electric shock**
- Use extreme caution to avoid electrical shock. Serious injury or death could result.
- Always disconnect power from the safety system (for example, device, module, interfacing, etc.), guarded machine, and/or the machine being controlled before making any connections or replacing any component. Lockout/tagout procedures might be required. Refer to OSHA 29CFR1910.147, ANSI Z244-1, or the applicable standard for controlling hazardous energy.
- Make no more connections to the device or system than are described in this manual. Electrical installation and wiring must be made by a Qualified Person[(2)] and must comply with the applicable electrical standards and wiring codes, such as the NEC (National Electrical Code), NFPA 79, or IEC 60204-1, and all applicable local standards and codes.

WARNING:

- **Properly install arc or transient suppressors**
- Failure to follow these instructions could result in serious injury or death.
- Install any suppressors as shown across the coils of the machine primary control elements. Do not install suppressors directly across the output contacts of the safety or interface module. In such a configuration, it is possible for suppressors to fail as a short circuit.

WARNING:

- **Interfacing master stop controls**
- Failure to follow these instructions could result in serious injury or death.
- Unless the same degree of safety is maintained, never wire an intermediate device(s) (PLC, PES, PC) between the safety module outputs and the master stop control element it switches such that a failure causes a loss of the safety stop command or the failure allows the safety function to be suspended, overridden, or defeated.
- When forced-guided, mechanically linked relays are added as intermediate switching devices, a normally closed (N.C.) forced-guided monitor contact from each relay must be added to the series feedback loop or properly wired external device monitoring channel.

[(2)] A person who, by possession of a recognized degree or certificate of professional training, or who, by extensive knowledge, training and experience, has successfully demonstrated the ability to solve problems relating to the subject matter and work.

© Banner Engineering Corp. All rights reserved.
www.bannerengineering.com

Generalized EM-F-7G Wiring

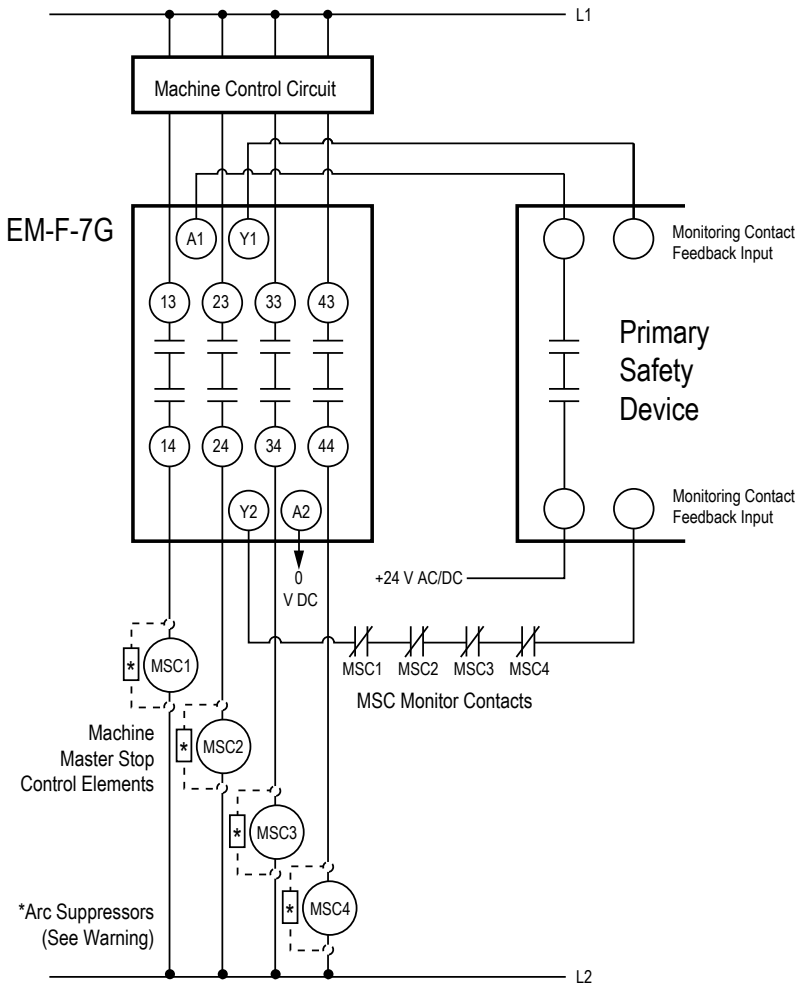

One-Channel Control

One-channel control affords simplicity of wiring. However, one-channel wiring requires eliminating the possibility of an unsafe failure of the control wires (which connect the output of the Primary Safety Device to the input of the Extension Module).

It is recommended that in all circumstances the installation of the Safety Module and its associated safety input devices are installed to eliminate or minimize the possibility of failures and faults that could result in the loss of the safety function(s). Methods to eliminate or minimize the possibility of these failures include, but are not limited to:

- Physically separating interconnecting control wires from each other and from secondary sources of power.
- Routing interconnecting control wires in separate conduits, runs, or channels.
- Locating all elements (modules, switches, and devices under control) within one control panel, adjacent to each other, and directly connected with short wires.
- Properly installing multi-conductor cabling and multiple wires through strain-relief fittings. (Over-tightening of a strain-relief can cause short circuits at that point.)
- Periodically checking the functional integrity/safety function and training operators, maintenance personnel, and others associated with the operation of the machine to recognize and immediately correct such failures.

The output of the Primary Safety Device must consist of two or more series-connected, normally open contacts, coming from forced-guided safety relays. These contacts must be monitored for failure by the Primary Safety Device. In addition, a single contact failure cannot prevent normal stopping action, and a successive cycle cannot be initiated until the failure has been corrected. An example of this type of output is any single output channel of a Banner E-stop safety module.

Use of Multiple Safety Extension Modules

Multiple Safety Extension Modules may be connected to one Primary Safety Device that has additional unused output safety channels. However, only one Safety Extension Module may be wired per output safety channel. A Safety Extension Module may be controlled by an output safety channel of another Safety Extension Module. However, the delay times of both Safety Extension Modules must be added together to determine their combined output response time.

© Banner Engineering Corp. All rights reserved.
www.bannerengineering.com

Whenever more than one Safety Extension Module is controlled by one Primary Safety Device, the monitoring contacts of all Safety Extension Modules (terminals Y1 and Y2) must be wired together in series and connected to the Monitoring Contact Feedback Input of the Primary Safety Device.

Connection to the Machine to be Controlled

The wiring diagram ("Figure: Generalized EM-F-7G Wiring" on page 5) shows a generic connection of the four safety output channels of the Safety Extension Module to Master Stop Control Elements MSC1 through MSC4. A Master Stop Control Element is defined as an electrically powered device, external to the Extension Module, which stops the machinery being controlled by immediately removing the electrical power to the machine and (when necessary) by applying braking to dangerous motion (see ANSI B11.19). To achieve control reliability, two redundant MSCs are required to control each machine hazard.

To satisfy the requirements of control reliability, all MSCs must offer at least one normally closed forced-guided monitor contact. One normally closed monitor contact from each MSC is wired in series to the monitoring contact feedback input of the Primary Safety Device (as shown in "Figure: Generalized EM-F-7G Wiring" on page 5). In operation, if one of the switching contacts of any MSC fails in the shorted condition, the associated monitor contact will remain open. As a result, it will not be possible to reset the Primary Safety Device.

Many types of mechanisms are used to arrest dangerous machine motion. Examples include mechanical braking systems, clutch mechanisms, and combinations of brakes and clutches. Additionally, control of the arresting scheme may be hydraulic or pneumatic. As a result, an MSC may be one of several control types, including a wide variety of contactors and electromechanical valves. If your machine documentation leaves any doubt about the proper connection points for the Safety Extension Module output contacts, do not make any connections. Contact the machine builder for clarification regarding connection to the MSCs.

IMPORTANT: NOTICE regarding MSCs. To achieve control reliability, two redundant Master Stop Control Elements (MSCs) are required to control each machine hazard. Each MSC must be capable of immediately stopping the dangerous machine motion, irrespective of the state of the other. Some machines offer only one primary control element. For such machines, it is necessary to duplicate the circuit of the single MSC to add a second MSC. MSCs must offer at least one forced-guided auxiliary contact which is wired to the monitoring contact feedback input of the Primary Safety Device (see "Figure: Generalized EM-F-7G Wiring" on page 5).

WARNING:
MSC Monitoring. All Master Stop Control elements (MSCs), such as control relays, must be of forced-guided, captive contact design to allow the MSC Monitoring circuit to detect unsafe failures within the master stop control elements. This monitoring extends the safe switching point of the Primary Safety Device and the EM-F-7G Safety Extension Module to the MSC elements. For this monitoring to be effective, a minimum of two redundant MSCs are required to control each hazard. This is to detect the unsafe failure of one MSC (e.g., a welded contact), while stopping the hazard and preventing a successive machine cycle with the second MSC.

If the MSCs are the last electrically controlled device generating the hazard (i.e., not relays or contactors) and they do not have forced-guided, captive contacts to monitor (such as a solenoid), then the user must ensure that failure or fault of any single component of the MSCs will prevent a successive machine cycle and will not result in a hazardous situation.

NOTE: MSC monitoring is also called external device monitoring (EDM), MPCE feedback, and relay backchecking.

Initial Checkout Procedure for Extension Modules

The Safety Extension Module can be used safely only when its operation is controlled via an appropriate Primary Safety Device, connected to the Extension Module according to the wiring diagram.

CAUTION:
- **Disconnect power prior to checkout**
- Dangerous voltages might be present along the module wiring barriers whenever power to the machine control elements is on.
- Before performing the initial checkout procedure, disconnect all power from the machine to be controlled. Exercise extreme caution whenever machine control power is or might be present. Always disconnect power to the machine control elements before opening the enclosure housing of the module.

1. Remove the power controlling (and switched by) the machine control elements.
2. Verify that the Primary Safety Device which will be controlling the Safety Extension Module is operating correctly, according to its product documentation and manufacturer's recommendations.
3. Confirm proper connection of the Safety Extension Module to the controlling Primary Safety Device according to the wiring diagram.
4. Verify that all four Safety Extension Module output contacts follow exactly the operation of the safety output contacts of the controlling Primary Safety Device, within the specified delay time, when the Primary Safety Device is operated according to its product documentation and manufacturer's recommendations.
5. Close and secure the enclosure in which the Safety Module is mounted.
6. Apply power to the machine control elements and perform the Periodic Checkout Procedure of the Primary Safety Device.

© Banner Engineering Corp. All rights reserved.
www.bannerengineering.com

Periodic Checkout Procedure for Extension Modules

The checkout procedures must be performed according to the intervals (regular periodic basis) specified by the product documentation of the Primary Safety Device controlling this Safety Extension Module.

EU/UK Declaration of Conformity (DoC)

Banner Engineering Corp. herewith declares that these products are in conformity with the provisions of the listed directives and all essential health and safety requirements have been met. For the complete DoC, please go to www.bannerengineering.com.

Product	Directive
EM-F-7G Safety Extension Module	EU: Low Voltage Directive 2014/35/EU; EMC Directive 2014/30/EU; RoHS Directives 2011/65/EU as amended by 2015/863/EU
	UKCA: Electrical Equipment (Safety) Regulations 2016; EMC Regulations 2016; RoHS Regulations 2012

Representative in EU: Spiros Lachandidis, Managing Director, **Banner Engineering BV** Park Lane | Culliganlaan 2F bus 3 | 1831 Diegem, BELGIUM

Representative in UK: Tony Coghlan, Managing Director, **Turck Banner LTD** Blenheim House | Blenheim Court | Wickford, Essex SS11 8YT | Great Britain

Module Repairs and Translations

Obtain assistance with product repairs by contacting your local Banner Engineering Corp distributor or by calling Banner directly at (763) 544-3164. Access literature translated into your native language on the Banner website at www.bannerengineering.com or contact Banner directly at (763) 544-3164.

Para reparaciones de productos, por favor contacte a su distribuidor local de Banner Engineering o llame a Banner directamente al 00 1 (763) 544-3164. Vea la literatura traducida en su idioma en el sitio web Banner en www.bannerengineering.com o comuníquese con Banner directamente al 00 1 (763) 544-3164.

Pour vous aider lors de la réparation de produits, contactez votre distributeur Banner local our appelez directement Banner au (763) 544-3164. La documentation traduite dans votre langue est disponible sur le site internet de Banner www.bannerengineering.com ou contactez directement Banner au (763) 544-3164.

请联系当地的 Banner Engineering Corp 经销商或直接致电 Banner +1 (763) 544-3164，以获得产品维修帮助。请访问邦纳网站 www.bannerengineering.com 或直接拨打 +1 (763) 544-3164 联系邦纳，获取翻译成您母语的资料。

제품 수리에 대한 지원은 지역 Banner Engineering Corp 대리점에 문의하거나 Banner에 직접 (763) 544-3164로 문의하실 수 있습니다. 사용자의 모국어로 번역된 자료는 Banner 웹사이트 www.bannerengineering.com에서 액세스하거나 Banner에 직접 (763) 544-3164로 문의하실 수 있습니다.

WARNING:

- **Do not abuse the module after failure**—If an internal fault has occurred and the module will not reset, do not tap, strike, or otherwise attempt to correct the fault with a physical impact to the housing.
- Failure to follow these instructions could result in serious injury or death.
- An internal relay might have failed in such a manner that its replacement is required. If the module is not immediately replaced or repaired, multiple simultaneous failures might accumulate such that the safety function cannot be guaranteed.

Banner Engineering Corp Limited Warranty

Banner Engineering Corp. warrants its products to be free from defects in material and workmanship for one year following the date of shipment. Banner Engineering Corp. will repair or replace, free of charge, any product of its manufacture which, at the time it is returned to the factory, is found to have been defective during the warranty period. This warranty does not cover damage or liability for misuse, abuse, or the improper application or installation of the Banner product.

THIS LIMITED WARRANTY IS EXCLUSIVE AND IN LIEU OF ALL OTHER WARRANTIES WHETHER EXPRESS OR IMPLIED (INCLUDING, WITHOUT LIMITATION, ANY WARRANTY OF MERCHANTABILITY OR FITNESS FOR A PARTICULAR PURPOSE), AND WHETHER ARISING UNDER COURSE OF PERFORMANCE, COURSE OF DEALING OR TRADE USAGE.

This Warranty is exclusive and limited to repair or, at the discretion of Banner Engineering Corp., replacement. **IN NO EVENT SHALL BANNER ENGINEERING CORP. BE LIABLE TO BUYER OR ANY OTHER PERSON OR ENTITY FOR ANY EXTRA COSTS, EXPENSES, LOSSES, LOSS OF PROFITS, OR ANY INCIDENTAL, CONSEQUENTIAL OR SPECIAL DAMAGES RESULTING FROM ANY PRODUCT DEFECT OR FROM THE USE OR INABILITY TO USE THE PRODUCT, WHETHER ARISING IN CONTRACT OR WARRANTY, STATUTE, TORT, STRICT LIABILITY, NEGLIGENCE, OR OTHERWISE.**

Banner Engineering Corp. reserves the right to change, modify or improve the design of the product without assuming any obligations or liabilities relating to any product previously manufactured by Banner Engineering Corp. Any misuse, abuse, or improper application or installation of this product or use of the product for personal protection applications when the product is identified as not intended for such purposes will void the product warranty. Any modifications to this product without prior express approval by Banner Engineering Corp will void the product warranties. All specifications published in this document are subject to change; Banner reserves the right to modify product specifications or update documentation at any time.

© Banner Engineering Corp. All rights reserved.
www.bannerengineering.com

Specifications and product information in English supersede that which is provided in any other language. For the most recent version of any documentation, refer to: www.bannerengineering.com.

For patent information, see www.bannerengineering.com/patents.

© Banner Engineering Corp. All rights reserved.