# EZ-LIGHT® Touch Gen 2 K50 FDA-Grade Illuminated Multipurpose Buttons

## Features

*General Purpose Multicolor Indicator with Independent Momentary Touch Button Output*



- FDA-grade materials; rated to IP67, IP68, and IP69K
- Laser-marked information withstands aggressive cleaning procedures
- Excellent immunity to false triggering by water spray, detergents, oils, and other foreign materials
- Rugged, cost-effective, and easy-to-install multicolor indicator with touch button
- Three independent colors in one unit: Color 3 overrides Colors 1 and 2, Color 2 overrides Color 1
- Available with PNP and NPN inputs/outputs, depending on the model
- Ergonomically designed to eliminate hand, wrist, and arm stresses associated with repeated switch operation; requires no physical force to operate
- Can be actuated with bare hands or gloves
- 12 V DC to 30 V DC operation

**WARNING:**

- **Do not use this device for personnel protection**
- Using this device for personnel protection could result in serious injury or death.
- This device does not include the self-checking redundant circuitry necessary to allow its use in personnel safety applications. A device failure or malfunction can cause either an energized (on) or de-energized (off) output condition.

## Models

| Model[1] | I/O Type | Output State | Color 1 | Color 2 | Color 3 | Connection |
|---|---|---|---|---|---|---|
| **K50APT2FGRYF2QP** | PNP | N.O. | Green | Red | Yellow | 150 mm (6 in) PVC-jacketed cable with an 8-pin M12 male, stainless steel quick-disconnect connector |
| **K50RPT2FGRYF2QP** | | N.C. | | | | |
| **K50ANT2FGRYF2QP** | NPN | N.O. | | | | |
| **K50RNT2FGRYF2QP** | | N.C. | | | | |

## Wiring Diagram

**NPN Output Models**

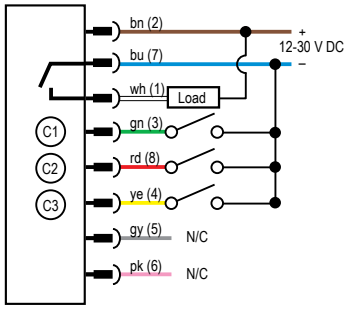


**PNP Output Models**

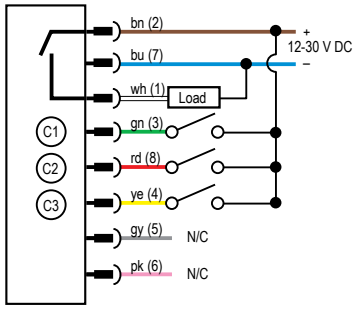


**Wiring Key**

1 = White
2 = Brown
3 = Green
4 = Yellow
5 = Gray
6 = Pink
7 = Blue
8 = Red

**Pinout**

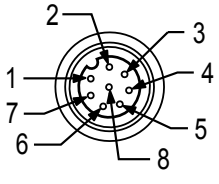


## Indicator and Output Behavior

*PNP Models*

| Input Actions | | | | Touch Button Actions | | |
|---|---|---|---|---|---|---|
| **Input #1: Pin 3 Green Wire** | **Input #2: Pin 8 Red Wire** | **Input #3: Pin 4 Yellow Wire** | **LED Color** | **Output Type** | **Touch** | **Output: Pin 1 White Wire** |
| Open or -V DC | Open or -V DC | Open or -V DC | Light Off | N.O. | Not touched | PNP Output Off |
| +V DC | Open or -V DC | Open or -V DC | Color #1 On | | Touched | PNP Output On |
| +V DC | +V DC | Open or -V DC | Color #2 On | N.C. | Not touched | PNP Output On |

Continued on page 2

[1] To order the 2 m (6.5 ft) PVC cable model, omit the suffix "QP" in the model number. For example, K50APT2FGRYF2.

Original Instructions
19-Jun-25

© Banner Engineering Corp. All rights reserved.
www.bannerengineering.com

189837
p/n: 189837 Rev. D

ПРОМЭЛЕКТРОНИКА/ sales@prom-elec.com

Continued from page 1

| Input Actions | | | | Touch Button Actions | | |
|---|---|---|---|---|---|---|
| Input #1: Pin 3 Green Wire | Input #2: Pin 8 Red Wire | Input #3: Pin 4 Yellow Wire | LED Color | Output Type | Touch | Output: Pin 1 White Wire |
| +V DC | +V DC | +V DC | Color #3 On | | Touched | PNP Output Off |
| Open or -V DC | +V DC | Open or -V DC | Color #2 On | | | |
| Open or -V DC | +V DC | +V DC | Color #3 On | | | |
| Open or -V DC | Open or -V DC | +V DC | Color #3 On | | | |
| +V DC | Open or -V DC | +V DC | Color #3 On | | | |

*NPN Models*

| Input Actions | | | | Touch Button Actions | | |
|---|---|---|---|---|---|---|
| Input #1: Pin 3 Green Wire | Input #2: Pin 8 Red Wire | Input #3: Pin 4 Yellow Wire | LED Color | Output Type | Touch | Output: Pin 1 White Wire |
| Open or +V DC | Open or +V DC | Open or +V DC | Light Off | N.O. | Not touched | NPN Output Off |
| -V DC | Open or +V DC | Open or +V DC | Color #1 On | | Touched | NPN Output On |
| -V DC | -V DC | Open or +V DC | Color #2 On | N.C. | Not touched | NPN Output On |
| -V DC | -V DC | -V DC | Color #3 On | | Touched | NPN Output Off |
| Open or +V DC | -V DC | Open or +V DC | Color #2 On | | | |
| Open or +V DC | -V DC | -V DC | Color #3 On | | | |
| Open or +V DC | Open or +V DC | -V DC | Color #3 On | | | |
| -V DC | Open or +V DC | -V DC | Color #3 On | | | |

# Specifications

**Supply Voltage**

12 V DC to 30 V DC

**Supply Current**

< 75 mA max current at 12 V DC (exclusive of load)

< 50 mA max current at 30 V DC (exclusive of load)

**Supply Protection Circuitry**

Protected against reverse polarity and transient voltages

**Output Rating**

Maximum load: 150 mA

ON-state saturation voltage: < 2 V DC at 10 mA; < 2.5 V DC at 150 mA

OFF-state leakage current: <10 µA at 30 V DC

**Output Response Time**

50 milliseconds On and Off

**Environmental Rating**

IP67, IP69K per ISO 20653

**Operating Conditions**

–40 °C to +50 °C (–40 °F to +122 °F)

90% at 50 °C maximum relative humidity (non-condensing)

**Storage**

–40 °C to +70 °C (–40 °F to +158 °F)

**Vibration and Mechanical Shock**

Vibration: 10 Hz to 55 Hz, 1.0 mm peak-to-peak amplitude per IEC 60068-2-6

Shock: 30G 11 ms duration, half sine wave per IEC 60068-2-27

**Connections**

150 mm (6 in) PVC-jacketed cable with an 8-pin M12 male, stainless steel quick-disconnect connector, or 2 m (6.5 ft) integral PVC-jacketed cable

**Construction**

Base, dome, and nut: FDA-grade polycarbonate

**Mounting**

M30 × 1.5 threaded base max. torque 4.5 N·m (40 in·lbf)

**Power-Up Delay**

300 milliseconds

**Indicators**

Color 1: Green

Color 2: Red

Color 3: Yellow

**Indicator Lumens**

| Color | Typical Wavelength | Typical Intensity (lm) |
|---|---|---|
| Green | 525 nm | 29 |
| Red | 625 nm | 13 |
| Yellow | 591 nm | 24 |

**Required Overcurrent Protection**

**WARNING:** Electrical connections must be made by qualified personnel in accordance with local and national electrical codes and regulations.

Overcurrent protection is required to be provided by end product application per the supplied table.

Overcurrent protection may be provided with external fusing or via Current Limiting, Class 2 Power Supply.

Supply wiring leads < 24 AWG shall not be spliced.

For additional product support, go to www.bannerengineering.com.

| Supply Wiring (AWG) | Required Overcurrent Protection (A) | Supply Wiring (AWG) | Required Overcurrent Protection (A) |
|---|---|---|---|
| 20 | 5.0 | 26 | 1.0 |
| 22 | 3.0 | 28 | 0.8 |
| 24 | 1.0 | 30 | 0.5 |

**Certifications**

Banner Engineering BV
Park Lane, Culliganlaan 2F bus 3
1831 Diegem, BELGIUM



© Banner Engineering Corp. All rights reserved.
www.bannerengineering.com

## Dimensions

All measurements are listed in millimeters [inches], unless noted otherwise. The measurements provided are subject to change.

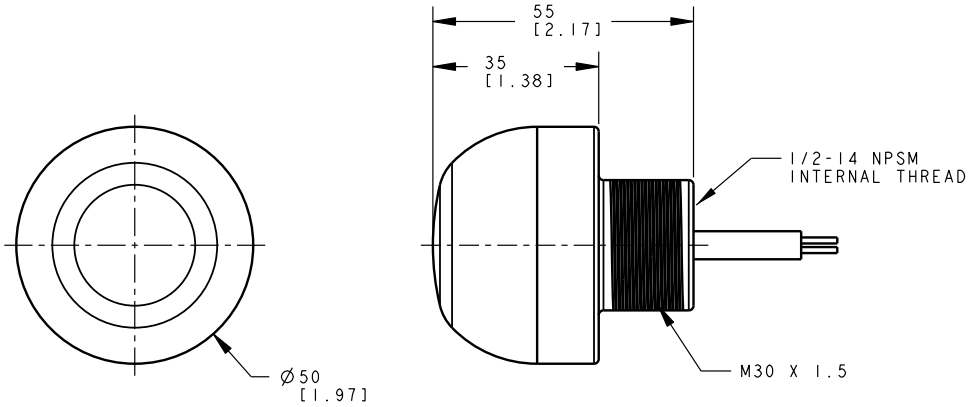


# Accessories

## Cordsets

| 8-Pin Single-Ended M12 Female Open-Shielded Cordsets | | | | |
|---|---|---|---|---|
| **Model** | **Length** | **Style** | **Dimensions** | **Pinout (Female)** |
| MQDC2S-806 | 2.04 m (6.7 ft) | Straight | 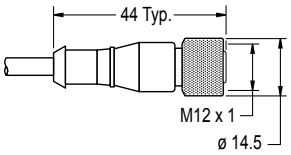  | 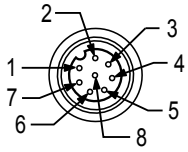  1 = White 2 = Brown 3 = Green 4 = Yellow 5 = Gray 6 = Pink 7 = Blue 8 = Red |
| MQDC2S-815 | 5.04 m (16.54 ft) | | | |
| MQDC2S-830 | 10.04 m (32.95 ft) | | | |
| MQDC2S-850 | 16 m (52.49 ft) | | | |
| MQDC2S-806RA | 2 m (6.56 ft) | Right-Angle | 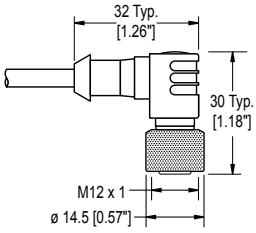  | |
| MQDC2S-815RA | 5 m (16.4 ft) | | | |
| MQDC2S-830RA | 10 m (32.81 ft) | | | |
| MQDC2S-850RA | 16 m (52.49 ft) | | | |

| 8-Pin Single-Ended M12 Female Open-Shielded, Washdown, Stainless Steel Cordsets | | | | | |
|---|---|---|---|---|---|
| **Model** | **Length** | **Style** | **Dimensions** | **Pinout (Female)** | |
| MQDC-WDSS-0806 | 2 m (6.56 ft) | Straight | 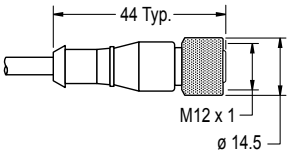  | 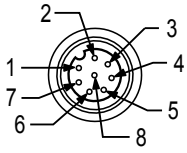  | |
| MQDC-WDSS-0815 | 5 m (16.4 ft) | | | | |
| MQDC-WDSS-0830 | 9 m (29.53 ft) | | | 1 = White<br>2 = Brown<br>3 = Green<br>4 = Yellow | 5 = Gray<br>6 = Pink<br>7 = Blue<br>8 = Red |


© Banner Engineering Corp. All rights reserved.
www.bannerengineering.com

# Brackets

**SMB30A**

- Right-angle bracket with curved slot for versatile orientation
- Clearance for M6 (¼ in) hardware
- Mounting hole for 30 mm sensor
- 12-gauge stainless steel

**Hole center spacing:** A to B=40
**Hole size:** A=ø 6.3, B= 27.1 × 6.3, C=ø 30.5

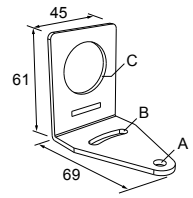


**SMB30FA**

- Swivel bracket with tilt and pan movement for precise adjustment
- Mounting hole for 30 mm sensor
- 12-gauge 304 stainless steel
- Easy sensor mounting to extrude rail T-slot
- Metric- and inch-size bolt available

**Bolt thread:** SMB30FA, A= 3/8 - 16 × 2 in; SMB30FAM10, A= M10 - 1.5 × 50
**Hole size:** B= ø 30.1

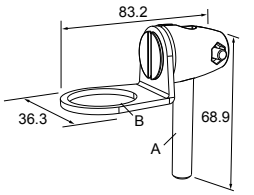


**SMB30FVK**

- V-clamp, flat bracket and fasteners for mounting to pipe or extensions
- Clamp accommodates 28 mm dia. tubing or 1 in. square extrusions
- 30 mm hole for mounting sensors

**Hole size:** A= ø 31

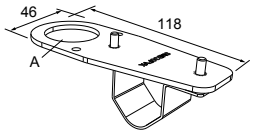


**SMB30MM**

- 12-gauge stainless steel bracket with curved mounting slots for versatile orientation
- Clearance for M6 (¼ in) hardware
- Mounting hole for 30 mm sensor

**Hole center spacing:** A = 51, A to B = 25.4
**Hole size:** A = 42.6 × 7, B = ø 6.4, C = ø 30.1

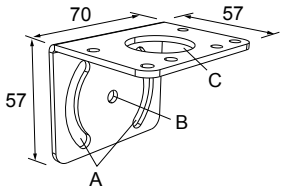


**SMB30RAVK**

- V-clamp, right-angle bracket and fasteners for mounting sensors to pipe or extrusion
- Clamp accommodates 28 mm dia. tubing or 1 in. square extrusions
- 30 mm hole for mounting sensors

**Hole size:** A = ø 30.5

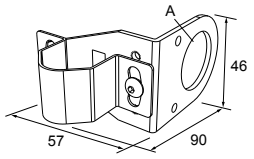


**SMB30SC**

- Swivel bracket with 30 mm mounting hole for sensor
- Black reinforced thermoplastic polyester
- Stainless steel mounting and swivel locking hardware included

**Hole center spacing:** A=ø 50.8
**Hole size:** A=ø 7.0, B=ø 30.0

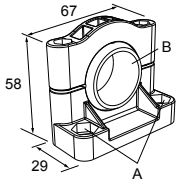


**SMBAMS30P**

- Flat SMBAMS series bracket
- 30 mm hole for mounting sensors
- Articulation slots for 90°+ rotation
- 12-gauge 300 series stainless steel

**Hole center spacing:** A=26.0, A to B=13.0
**Hole size:** A=26.8 × 7.0, B=ø 6.5, C=ø 31.0

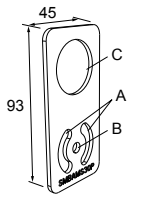



© Banner Engineering Corp. All rights reserved.
www.bannerengineering.com

**SMBAMS30RA**

- Right-angle SMBAMS series bracket
- 30 mm hole for mounting sensors
- Articulation slots for 90°+ rotation
- 12-gauge (2.6 mm) cold-rolled steel

**Hole center spacing:** A=26.0, A to B=13.0
**Hole size:** A=26.8 × 7.0, B=ø 6.5, C=ø 31.0

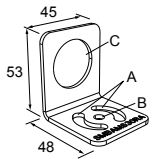


**TC-K50-CL**

- Touch cover

**Diameter:** A = 67 mm
**Height:** B = 42.5 mm

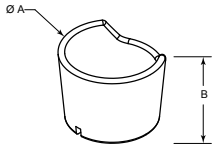


# Banner Engineering Corp Limited Warranty

Banner Engineering Corp. warrants its products to be free from defects in material and workmanship for one year following the date of shipment. Banner Engineering Corp. will repair or replace, free of charge, any product of its manufacture which, at the time it is returned to the factory, is found to have been defective during the warranty period. This warranty does not cover damage or liability for misuse, abuse, or the improper application or installation of the Banner product.

**THIS LIMITED WARRANTY IS EXCLUSIVE AND IN LIEU OF ALL OTHER WARRANTIES WHETHER EXPRESS OR IMPLIED (INCLUDING, WITHOUT LIMITATION, ANY WARRANTY OF MERCHANTABILITY OR FITNESS FOR A PARTICULAR PURPOSE), AND WHETHER ARISING UNDER COURSE OF PERFORMANCE, COURSE OF DEALING OR TRADE USAGE.**

This Warranty is exclusive and limited to repair or, at the discretion of Banner Engineering Corp., replacement. **IN NO EVENT SHALL BANNER ENGINEERING CORP. BE LIABLE TO BUYER OR ANY OTHER PERSON OR ENTITY FOR ANY EXTRA COSTS, EXPENSES, LOSSES, LOSS OF PROFITS, OR ANY INCIDENTAL, CONSEQUENTIAL OR SPECIAL DAMAGES RESULTING FROM ANY PRODUCT DEFECT OR FROM THE USE OR INABILITY TO USE THE PRODUCT, WHETHER ARISING IN CONTRACT OR WARRANTY, STATUTE, TORT, STRICT LIABILITY, NEGLIGENCE, OR OTHERWISE.**

Banner Engineering Corp. reserves the right to change, modify or improve the design of the product without assuming any obligations or liabilities relating to any product previously manufactured by Banner Engineering Corp. Any misuse, abuse, or improper application or installation of this product or use of the product for personal protection applications when the product is identified as not intended for such purposes will void the product warranty. Any modifications to this product without prior express approval by Banner Engineering Corp will void the product warranties. All specifications published in this document are subject to change; Banner reserves the right to modify product specifications or update documentation at any time. Specifications and product information in English supersede that which is provided in any other language. For the most recent version of any documentation, refer to: www.bannerengineering.com.

For patent information, see www.bannerengineering.com/patents.


© Banner Engineering Corp. All rights reserved.
www.bannerengineering.com