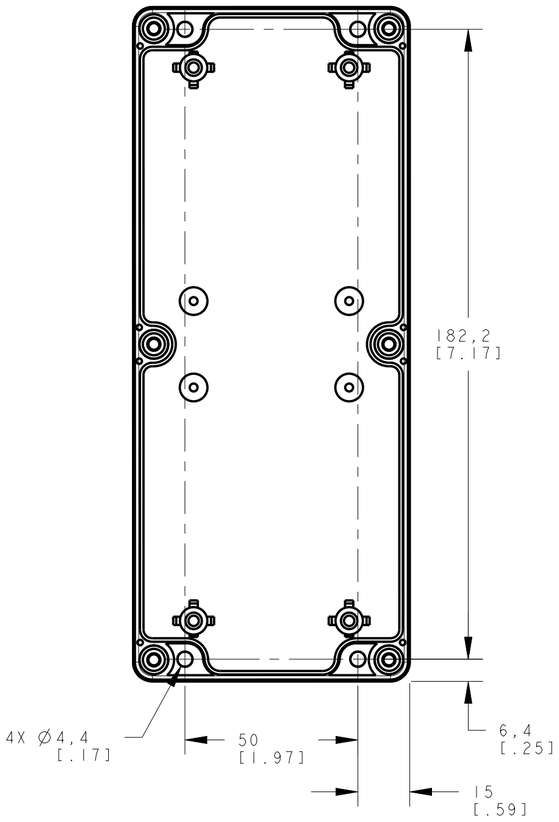

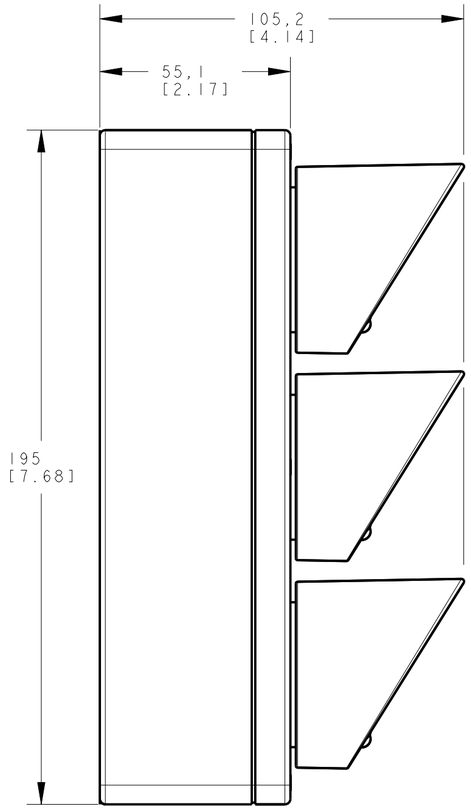

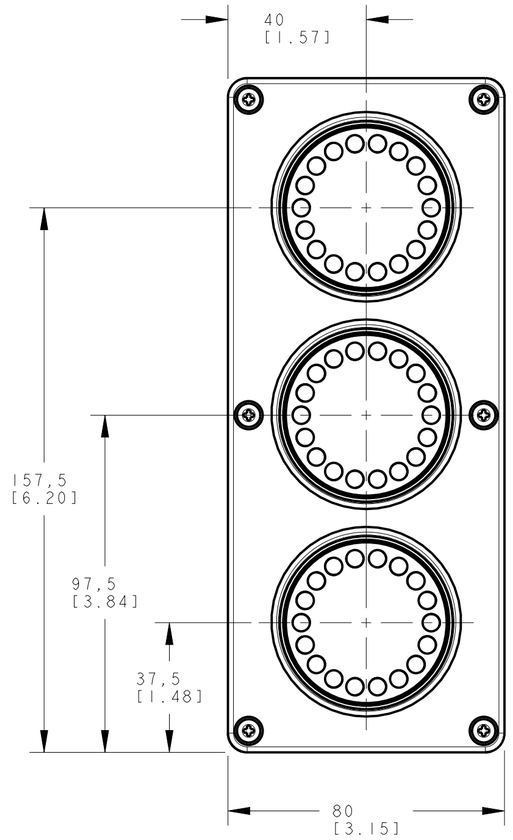

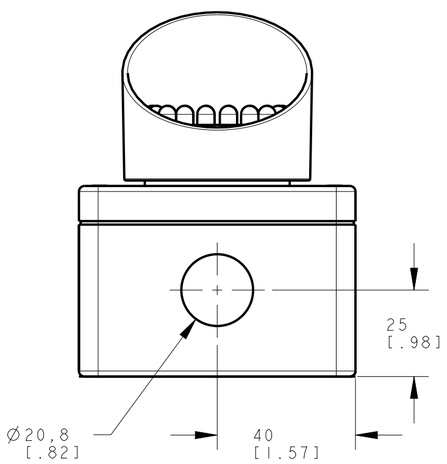

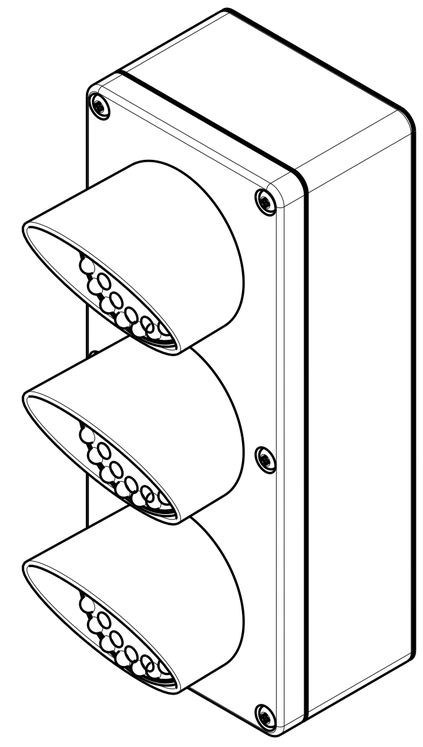

ISOMTERIC VIEW
SCALE 3:4

NOTES:
1. ALL DIMENSIONS ARE MILLIMETERS [INCHES] UNLESS OTHERWISE NOTED.
2. REFER TO "www.bannerengineering.com" FOR ADDITIONAL DATA AND SPECIFICATIONS.

This drawing is the property of BANNER ENGINEERING CORP. Any use or reproduction, in any form, without prior written permission of Banner is prohibited. © Banner Engineering Corp.

THIRD ANGLE PROJECTION

BANNER ENGINEERING CORP.
www.bannerengineering.com

TITLE
SP350 NO CABLE
WEB CAD DRAWINGS 2D/3D

SIZE	DRAWING NO.	REV.
C	151178	

SCALE	SHEET
3:4	1 OF 1

CREO

ПРОМЭЛЕКТРОНИКА/ sales@prom-elec.com