TL50 Tower Light Product Manual

Original Instructions
p/n: 249229 Rev. D
24-Nov-25
© Banner Engineering Corp. All rights reserved. www.bannerengineering.com

ПРОМЭЛЕКТРОНИКА/ sales@prom-elec.com

Contents

Chapter 1 Features 3
Models 3

Chapter 2 Wiring 5

Chapter 3 Specifications 6
Dimensions 7

Chapter 4 Accessories 8
Cordsets 8
Mounting Brackets 10
LMB Sealed Right Angle Bracket 11
Elevated Mount System 12

Chapter 5 Product Support and Maintenance 15
Clean with Mild Detergent and Warm Water 15
Repairs 15
Contact Us 15
Banner Engineering Corp Limited Warranty 15

© Banner Engineering Corp. All rights reserved. www.bannerengineering.com

Chapter Contents

Models 3

Chapter 1 Features

Multi-Color General-Purpose Indicators



- Rugged, cost-effective, and easy-to-install multi-segment indicators
- Illuminated segments provide easy-to-see operator guidance and indication of equipment status
- 18 V DC to 30 V DC
- No assembly required

Models

2-Segment Models

Model	LED Colors[1]	Connection[2]	Inputs
TL50BYQ	Blue, Yellow	Integral 4-pin M12 male quick-disconnect connector	Bimodal (NPN or PNP)
TL50GRQ	Green, Red		
TL50GYQ	Green, Yellow		
TL50RGQ	Red, Green		
TL50WBQ	White, Blue		
TL50YRQ	Yellow, Red		

3-Segment Models

Model	LED Colors[1]	Connection[2]	Inputs
TL50GYRQ	Green, Yellow, Red	Integral 4-pin M12 male quick-disconnect connector	Bimodal (NPN or PNP)
TL50GBRQ	Green, Blue, Red		
TL50BYRQ	Blue, Yellow, Red		
TL50GRYQ	Green, Red, Yellow		
TL50GRBQ	Green, Red, Blue		
TL50RYGQ	Red, Yellow, Green		

[1] The first color listed is the bottom color, going up in successive order.
[2] Models with a quick-disconnect connector require a mating cordset.

© Banner Engineering Corp. All rights reserved.
www.bannerengineering.com

4-Segment Models

Model	LED Colors[1]	Connection[2]	Inputs
TL50BGYRQ	Blue, Green, Yellow, Red	Integral 5-pin M12 male quick-disconnect connector	Bimodal (NPN or PNP)
TL50GBYRQ	Green, Blue, Yellow, Red		
TL50GYBRQ	Green, Yellow, Blue, Red		
TL50GWRYQ	Green, White, Red, Yellow		
TL50BGRYQ	Blue, Green, Red, Yellow		
TL50WBYRQ	White, Blue, Yellow, Red		
TL50GYRBQ	Green, Yellow, Red, Blue		
TL50WGYRQ	White, Green, Yellow, Red		

5-Segment Models

Model	LED Colors[1]	Connection[2]	Inputs
TL50GGBYWQ	Green, Green, Blue, Yellow, White	Integral 8-pin M12 male quick-disconnect connector	Bimodal (NPN or PNP)
TL50RYGBWQ	Red, Yellow, Green, Blue, White		
TL50WBGYRQ	White, Blue, Green, Yellow, Red		
TL50WGBYRQ	White, Green, Blue, Yellow, Red		

© Banner Engineering Corp. All rights reserved.
www.bannerengineering.com

Chapter Contents

Chapter 2 Wiring

4-Pin Models

2-Segment and 3-Segment	Wiring Key	Segment Key
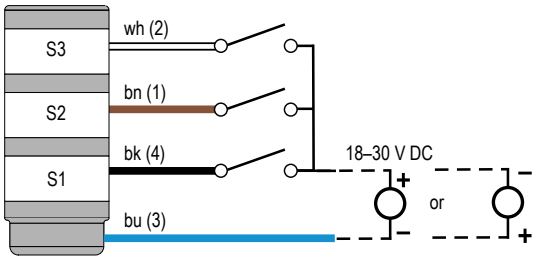	1 = Brown 2 = White 3 = Blue 4 = Black 5 = Gray (not used)	S1 = Segment 1 S2 = Segment 2 S3 = Segment 3

5-Pin Models

4-Segment	Wiring Key	Segment Key
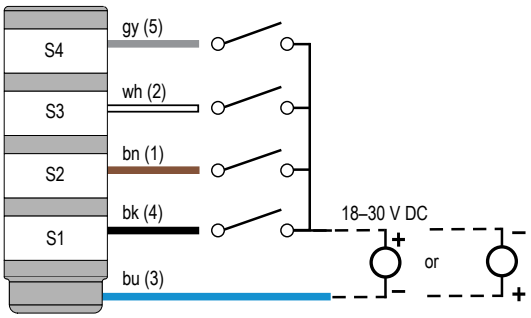	1 = Brown 2 = White 3 = Blue 4 = Black 5 = Gray	S1 = Segment 1 S2 = Segment 2 S3 = Segment 3 S4 = Segment 4

8-Pin Models

5-Segment	Wiring Key	Segment Key
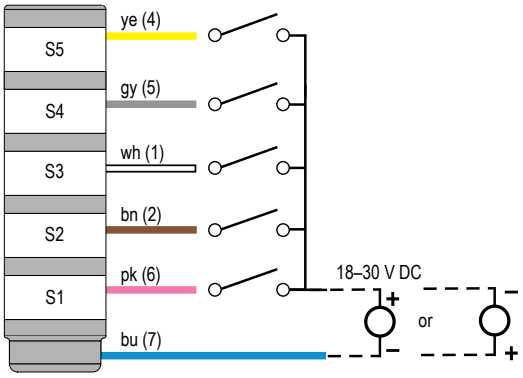	1 = White 2 = Brown 3 = Green (not used) 4 = Yellow 5 = Gray 6 = Pink 7 = Blue 8 = Red (not used)	S1 = Segment 1 S2 = Segment 2 S3 = Segment 3 S4 = Segment 4 S5 = Segment 5

© Banner Engineering Corp. All rights reserved.
www.bannerengineering.com

Chapter Contents

Dimensions..... 7

Chapter 3 Specifications

Supply Voltage and Current

18 V DC to 30 V DC

Segments—maximum current per LED segment: 26 mA at 18 V DC to 30 V DC

Supply Protection Circuitry

Protected against transient voltages

Input Response Time

Indicator On/Off: 1 milliseconds maximum

Operating Frequency

3.1 kHz ± 500 Hz oscillation frequency

Intensity:

- High Setting: 93 dB at 1 m (typical)
- Low Setting: 10 dB typical reduction in sound intensity with audible adjustment (maximum to minimum)

Connections

Integral 4-pin, 5-pin, or 8-pin M12 male quick-disconnect connector, depending on model

Models with a quick-disconnect connector require a mating cordset

Construction

Bases and Covers: Polycarbonate

Light Segment: Polycarbonate

Vibration and Mechanical Shock

Meets IEC 60068-2-6 requirements (Vibration: 10 Hz to 55 Hz, 0.5 mm amplitude, 5 minutes sweep, 30 minutes dwell)

Meets IEC 60068-2-27 requirements (Shock: 15G 11 ms duration, half sine wave)

Operating Conditions

–40 °C to +50 °C (–40 °F to +122 °F)

95% at +50 °C maximum relative humidity (non-condensing)

Input Leakage Current Immunity

400 µA[3]

Environmental Rating

IP67

UL Type 4X

Included Accessories

M30 knurl nut and gasket

Indicators

LEDs are independently selected

[3] Any current above this value may activate the TL50.

Indicator Characteristics

Color	Dominant Wavelength (nm) or Color Temperature (CCT)	Lumen Output (Typical at 25 °C)
Green	525 nm	17
Red	625 nm	8
Yellow	590 nm	16
Blue	465 nm	4
White	6000K	21

Required Overcurrent Protection

WARNING: Electrical connections must be made by qualified personnel in accordance with local and national electrical codes and regulations.

Overcurrent protection is required to be provided by end product application per the supplied table.

Overcurrent protection may be provided with external fusing or via Current Limiting, Class 2 Power Supply.

Supply wiring leads < 24 AWG shall not be spliced.

For additional product support, go to www.bannerengineering.com.

Supply Wiring (AWG)	Required Overcurrent Protection (A)	Supply Wiring (AWG)	Required Overcurrent Protection (A)
20	5.0	26	1.0
22	3.0	28	0.8
24	2.0	30	0.5

Certifications

Banner Engineering BV
Park Lane, Culliganlaan 2F bus 3
1831 Diegem, BELGIUM

Turck Banner LTD Blenheim House
Blenheim Court
Wickford, Essex SS11 8YT
GREAT BRITAIN

© Banner Engineering Corp. All rights reserved.
www.bannerengineering.com

Dimensions

All measurements are listed in millimeters [inches], unless noted otherwise. The measurements provided are subject to change.

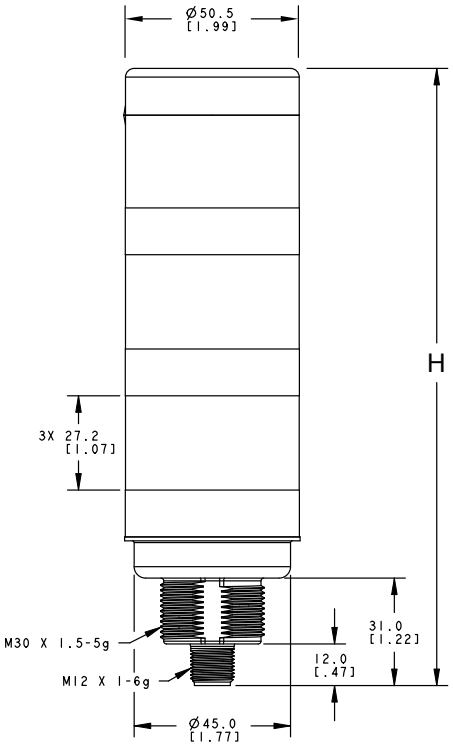

Number of Segments	Height H
2	137.4 mm (5.41 in)
3	178.1 mm (7.01 in)
4	218.8 mm (8.61 in)
5	258.5 mm (10.18 in)

© Banner Engineering Corp. All rights reserved.
www.bannerengineering.com

Chapter Contents

Cordsets 8
Mounting Brackets 10
LMB Sealed Right Angle Bracket 11
Elevated Mount System 12

Chapter 4 Accessories

Cordsets

4-pin Single-Ended M12 Female Cordsets (datasheet p/n 235937)				
Model	**Length**	**Dimensions (mm)**	**Pinout (Female)**	
BC-M12F4-22-1	1 m (3.28 ft)	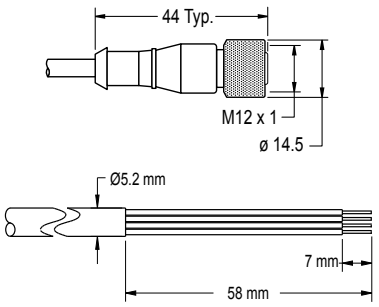	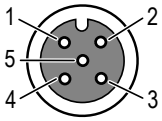	1 = Brown 2 = White 3 = Blue 4 = Black 5 = Unused c UL us LISTED
BC-M12F4-22-2	2 m (6.56 ft)			
BC-M12F4-22-5	5 m (16.4 ft)			
BC-M12F4-22-8	8 m (26.25 ft)			
BC-M12F4-22-10	10 m (30.81 ft)			
BC-M12F4-22-15	15 m (49.2 ft)			
BC-M12F4-22-20	20 m (65.61 ft)			
BC-M12F4-22-25	25 m (82.02 ft)			
BC-M12F4-22-30	30 m (98.42 ft)			

5-pin A-Code Single-Ended M12 Female Cordsets (datasheet p/n 235936)				
Model	**Length**	**Dimensions (mm)**	**Pinout (Female)**	
BC-M12F5-22-1	1 m (3.28 ft)	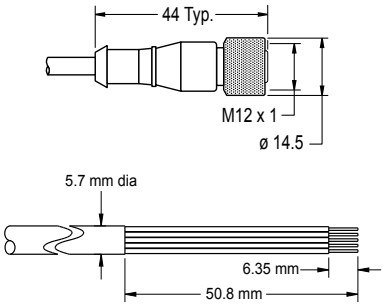	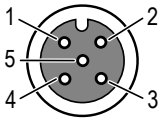	1 = Brown 2 = White 3 = Blue 4 = Black 5 = Gray
BC-M12F5-22-2	2 m (6.56 ft)			
BC-M12F5-22-5	5 m (16.4 ft)			
BC-M12F5-22-8	8 m (26.25 ft)			
BC-M12F5-22-10	10 m (30.81 ft)			
BC-M12F5-22-15	15 m (49.2 ft)			

© Banner Engineering Corp. All rights reserved.
www.bannerengineering.com

5-pin A-Code Single-Ended M12 Female Right-Angle Cordsets (datasheet p/n 235936)				
Model	**Length**	**Dimensions (mm)**	**Pinout (Female)**	
BC-M12F5A-22-1	1 m (3.28 ft)	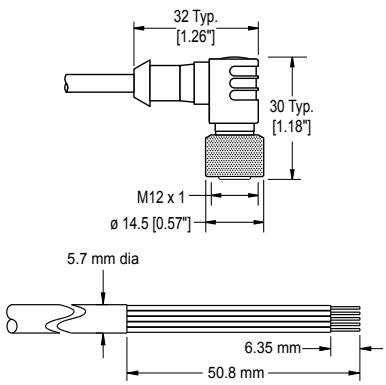	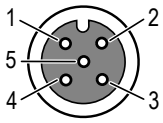	1 = Brown 2 = White 3 = Blue 4 = Black 5 = Gray
BC-M12F5A-22-2	2 m (6.56 ft)			
BC-M12F5A-22-5	5 m (16.4 ft)			
BC-M12F5A-22-8	8 m (26.25 ft)			
BC-M12F5A-22-10	10 m (30.81 ft)			
BC-M12F5A-22-15	15 m (49.2 ft)			

8-pin A-Code Single-Ended M12 Female Cordsets (datasheet p/n 235941)				
Model	**Length**	**Dimensions (mm)**	**Pinout (Female)**	
BC-M12F8-24-1	1 m (3.28 ft)	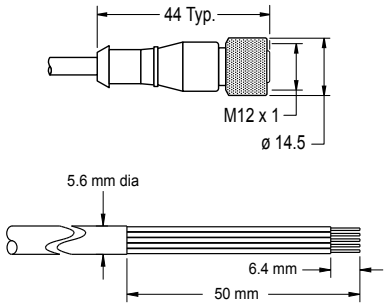	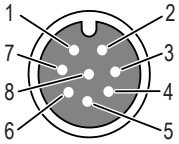	1 = White 2 = Brown 3 = Green 4 = Yellow 5 = Gray 6 = Pink 7 = Blue 8 = Red
BC-M12F8-24-2	2 m (6.56 ft)			
BC-M12F8-24-5	5 m (16.4 ft)			
BC-M12F8-24-10	10 m (30.81 ft)			

8-pin A-Code Single-Ended M12 Female Right-Angle Cordsets (datasheet p/n 235941)				
Model	**Length**	**Dimensions (mm)**	**Pinout (Female)**	
BC-M12F8A-24-1	1 m (3.28 ft)	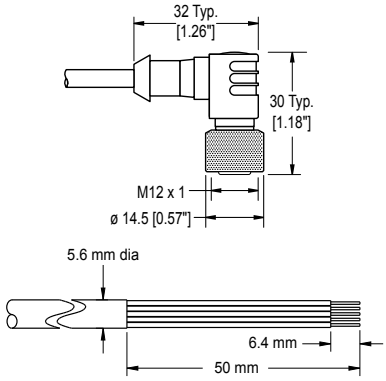	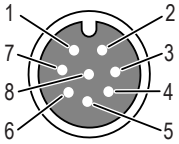	1 = White 2 = Brown 3 = Green 4 = Yellow 5 = Gray 6 = Pink 7 = Blue 8 = Red
BC-M12F8A-24-2	2 m (6.56 ft)			
BC-M12F8A-24-5	5 m (16.4 ft)			
BC-M12F8A-24-8	8 m (26.25 ft)			
BC-M12F8A-24-10	10 m (30.81 ft)			
BC-M12F8A-24-15	15 m (49.2 ft)			

© Banner Engineering Corp. All rights reserved.
www.bannerengineering.com

Mounting Brackets

All measurements are listed in millimeters [inches], unless noted otherwise. The measurements provided are subject to change.

SMB30A

- Right-angle bracket with curved slot for versatile orientation
- Clearance for M6 (¼ in) hardware
- Mounting hole for 30 mm sensor
- 12-gauge stainless steel
- CAD Files: DXF, PDF, IGS, STP

Hole center spacing: A to B=40
Hole size: A=ø 6.3, B= 27.1 × 6.3, C=ø 30.5

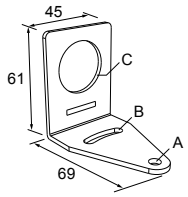

SMB30FA

- Swivel bracket with tilt and pan movement for precise adjustment
- Mounting hole for 30 mm sensor
- 12-gauge 304 stainless steel
- Easy sensor mounting to extrude rail T-slot
- Metric- and inch-size bolt available
- CAD Files: DXF, PDF, IGS, STP

Bolt thread: SMB30FA, A=3/8 - 16 × 2 in; SMB30FAM10, A=M10 - 1.5 × 50
Hole size: B=ø 30.1

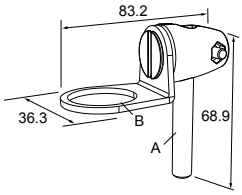

SMB30MM

- 12-gauge stainless steel bracket with curved mounting slots for versatile orientation
- Clearance for M6 (¼ in) hardware
- Mounting hole for 30 mm sensor
- CAD Files: DXF, PDF, IGS, STP

Hole center spacing: A=51, A to B=25.4
Hole size: A=42.6 × 7, B=ø 6.4, C=ø 30.1

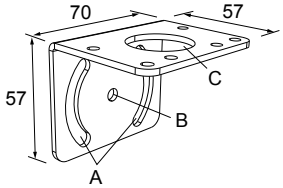

SMBAMS30P

- Flat SMBAMS series bracket
- 30 mm hole for mounting sensors
- Articulation slots for 90°+ rotation
- 12-gauge 300 series stainless steel
- CAD Files: DXF, PDF, IGS, STP

Hole center spacing: A=26.0, A to B=13.0
Hole size: A=26.8 × 7.0, B=ø 6.5, C=ø 31.0

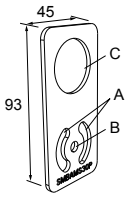

SMBAMS30RA

- Right-angle SMBAMS series bracket
- 30 mm hole for mounting sensors
- Articulation slots for 90°+ rotation
- 12-gauge (2.6 mm) cold-rolled steel
- CAD Files: DXF, PDF, IGS, STP

Hole center spacing: A=26.0, A to B=13.0
Hole size: A=26.8 × 7.0, B=ø 6.5, C=ø 31.0

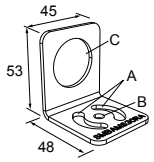

© Banner Engineering Corp. All rights reserved.
www.bannerengineering.com

SMB30SC

- Swivel bracket with 30 mm mounting hole for sensor
- Black reinforced thermoplastic polyester
- Stainless steel mounting and swivel locking hardware included
- CAD Files: DXF, PDF, IGS, STP

Hole center spacing: A=ø 50.8
Hole size: A=ø 7.0, B=ø 30.0

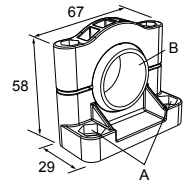

LMBE12RA35

- Direct mounting of stand-off pipe, with common bracket type
- Zinc-plated steel
- 1/2-14 NPSM nut
- Mounting distance from the wall to the center of the 1/2-14 NPSM nut is 35 mm
- CAD Files: DXF, PDF, IGS, STP

Hole center spacing: 20.0

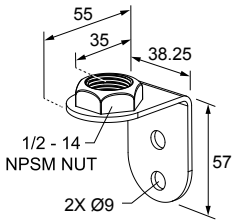

LMBE12RA45

- Direct mounting of stand-off pipe, with common bracket type
- Zinc-plated steel
- 1/2-14 NPSM nut
- Mounting distance from the wall to the center of the 1/2-14 NPSM nut is 45 mm
- CAD Files: DXF, PDF, IGS, STP

Hole center spacing: 35.0

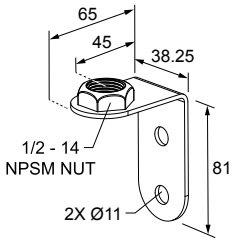

LMB Sealed Right Angle Bracket

Model	Description	Construction	
LMB30RA CAD Files: DXF, PDF, IGS, STP	**Direct-Mount Models:** Bracket kit with base, 30 mm adapter, set screw, fasteners, O-rings, and gaskets.	Black polycarbonate	
LMBE12RA CAD Files: DXF, PDF, IGS, STP	**Pipe-Mount Models:** Bracket kit with base, ½-14 pipe adapter, set screw, fasteners, O-rings, and gaskets. For use with stand-off pipe (listed and sold separately).	Black polycarbonate	

© Banner Engineering Corp. All rights reserved.
www.bannerengineering.com

Elevated Mount System

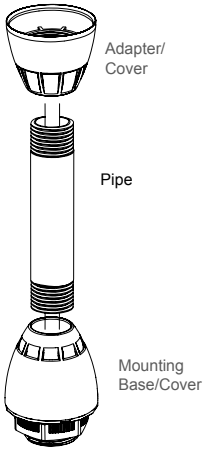

Adapter/Cover Model	Description	
SA-M30TE12 - Black acetal	• Streamlined black acetal or white UHMW stand-off pipe adapter/cover • Adapter from 30 mm light base to ½ in. NPSM/DN15 pipe • Typically used for the CL50 Column Light, TL50 Tower Light, and K50 series • Mounting hardware included • CAD files: DXF, PDF, IGS, STP	
SA-M30TE12C - White UHMW		

Black Anodized Aluminum, ½ in. NPT Pipe Models	Clear Anodized Aluminum, ½ in. NPT Pipe Models	Description
SOP-E12-150A, 150 mm (6 in) long	**SOP-E12-150AC**, 150 mm (6 in) long	• Elevated-use stand-off pipe • Threaded at both ends • Compatible with most industrial environments • CAD Files: ◦ **SOP-E12-150A**: DXF, PDF, IGS, STP ◦ **SOP-E12-300A**: DXF, PDF, IGS, STP ◦ **SOP-E12-600A**: DXF, PDF, IGS, STP ◦ **SOP-E12-900A**: DXF, PDF, IGS, STP
SOP-E12-300A, 300 mm (12 in) long	**SOP-E12-300AC**, 300 mm (12 in) long	
SOP-E12-600A, 600 mm (24 in) long	-	
SOP-E12-900A, 900 mm (36 in) long	**SOP-E12-900AC**, 900 mm (36 in) long	

304 Stainless Steel, ½ in. NPT Pipe Models	Description
SOP-E12-150SS, 150 mm (6 in) long	• Elevated-use stand-off pipe • Threaded at both ends • Compatible with most industrial environments • CAD Files: ◦ **SOP-E12-150x**: DXF, PDF, IGS, STP ◦ **SOP-E12-300x**: DXF, PDF, IGS, STP ◦ **SOP-E12-600x**: DXF, PDF, IGS, STP ◦ **SOP-E12-900x**: DXF, PDF, IGS, STP
SOP-E12-300SS, 300 mm (12 in) long	
SOP-E12-600SS, 600 mm (24 in) long	
SOP-E12-900SS, 900 mm (36 in) long	

Mounting Base Model	Description	
SA-E12M30 - Black acetal	• Streamlined black acetal or white UHMW mounting base adapter/cover • Adapter from ½ in. NPSM/DN15 pipe to 30 mm (1-3/16 in) drilled hole • Mounting hardware included • CAD files: DXF, PDF, IGS, STP	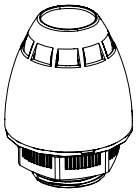
SA-E12M30C - White UHMW		

© Banner Engineering Corp. All rights reserved.
www.bannerengineering.com

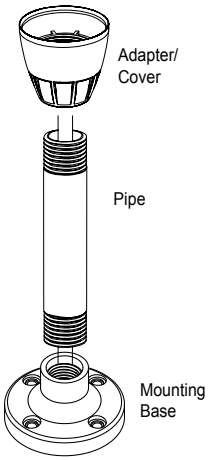

Adapter/Cover Model	Description	
SA-M30TE12 - Black acetal **SA-M30TE12C** - White UHMW	• Streamlined black acetal or white UHMW stand-off pipe adapter/cover • Adapter from 30 mm light base to ½ in. NPSM/DN15 pipe • Typically used for the CL50 Column Light, TL50 Tower Light, and K50 series • Mounting hardware included • CAD files: DXF, PDF, IGS, STP	

This configuration works with the same 1/2" aluminum and stainless steel pipes listed previously.

Mounting Base Model	Description	
SA-F12	• Die-cast zinc base with black paint • Elevated-use stand-off pipes (½ in, NPSM/DN15) • M5 mounting hardware and nitrile gasket included • CAD files: DXF, PDF, IGS, STP	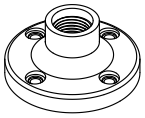

Mounting Base Model	Description	
SA-F12-3	• Black polycarbonate • Elevated-use stand-off pipes (½ in, NPSM/DN15) • M4 mounting hardware and nitrile blend gasket included • CAD files: DXF, PDF, IGS, STP	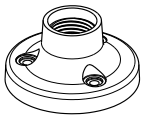

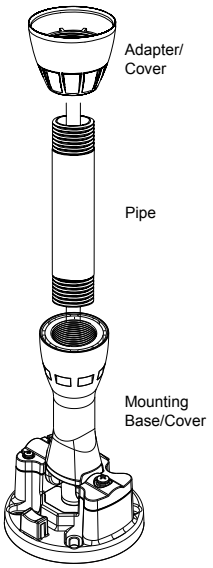

Adapter/Cover Model	Description	
SA-M30TE12 - Black acetal **SA-M30TE12C** - White UHMW	• Streamlined black acetal or white UHMW stand-off pipe adapter/cover • Adapter from 30 mm light base to ½ in. NPSM/DN15 pipe • Typically used for the CL50 Column Light, TL50 Tower Light, and K50 series • Mounting hardware included • CAD files: DXF, PDF, IGS, STP	

This configuration works with the same 1/2" aluminum and stainless steel pipes listed previously.

Mounting Base Model	Description	
SOKTL150R4	• Black polycarbonate • Foldable stand model with upright and 90° folding states • Elevated-use stand-off pipes (½ in, NPSM/DN15) • Mounting hardware included • CAD files: DXF, PDF, IGS, STP	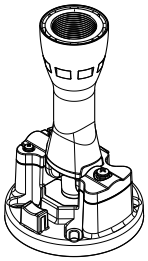

© Banner Engineering Corp. All rights reserved.
www.bannerengineering.com

Complete elevated mount kits for the TL50

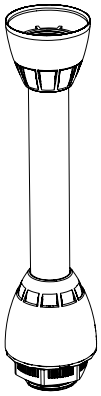

Kit Model	Description
SOK-TL50-150A	Includes: • SA-M30TE12 Adapter • SOP-E12-150A, SOP-E12-300A, or SOP-E12-600A Pipe • SA-E12M30 Base cover • CAD Files: ◦ **SOK-TL50-150x**: DXF, PDF, IGS, STP ◦ **SOK-TL50-300x**: DXF, PDF, IGS, STP ◦ **SOK-TL50-600x**: DXF, PDF, IGS, STP
SOK-TL50-300A	
SOK-TL50-600A	
SOK-TL50-150SS	Includes: • SA-M30TE12 Adapter • SOP-E12-150SS or SOP-E12-300SS Pipe • SA-E12M30 Base cover • CAD Files: ◦ **SOK-TL50-150x**: DXF, PDF, IGS, STP ◦ **SOK-TL50-300x**: DXF, PDF, IGS, STP
SOK-TL50-300SS	

© Banner Engineering Corp. All rights reserved.
www.bannerengineering.com

Chapter Contents

Clean with Mild Detergent and Warm Water 15
Repairs 15
Contact Us 15
Banner Engineering Corp Limited Warranty 15

Chapter 5 Product Support and Maintenance

Clean with Mild Detergent and Warm Water

Wipe down the device with a soft cloth dampened with a mild detergent and warm water solution. Do not use any other chemicals for cleaning.

Repairs

Contact Banner Engineering for troubleshooting of this device. **Do not attempt any repairs to this Banner device; it contains no field-replaceable parts or components.** If the device, device part, or device component is determined to be defective by a Banner Applications Engineer, they will advise you of Banner's RMA (Return Merchandise Authorization) procedure.

> **IMPORTANT:** If instructed to return the device, pack it with care. Damage that occurs in return shipping is not covered by warranty.

Contact Us

Banner Engineering Corp. | 9714 Tenth Avenue North | Plymouth, MN 55441, USA | Phone: + 1 888 373 6767

For worldwide locations and local representatives, visit www.bannerengineering.com.

Banner Engineering Corp Limited Warranty

Banner Engineering Corp. warrants its products to be free from defects in material and workmanship for one year following the date of shipment. Banner Engineering Corp. will repair or replace, free of charge, any product of its manufacture which, at the time it is returned to the factory, is found to have been defective during the warranty period. This warranty does not cover damage or liability for misuse, abuse, or the improper application or installation of the Banner product.

THIS LIMITED WARRANTY IS EXCLUSIVE AND IN LIEU OF ALL OTHER WARRANTIES WHETHER EXPRESS OR IMPLIED (INCLUDING, WITHOUT LIMITATION, ANY WARRANTY OF MERCHANTABILITY OR FITNESS FOR A PARTICULAR PURPOSE), AND WHETHER ARISING UNDER COURSE OF PERFORMANCE, COURSE OF DEALING OR TRADE USAGE.

This Warranty is exclusive and limited to repair or, at the discretion of Banner Engineering Corp., replacement. **IN NO EVENT SHALL BANNER ENGINEERING CORP. BE LIABLE TO BUYER OR ANY OTHER PERSON OR ENTITY FOR ANY EXTRA COSTS, EXPENSES, LOSSES, LOSS OF PROFITS, OR ANY INCIDENTAL, CONSEQUENTIAL OR SPECIAL DAMAGES RESULTING FROM ANY PRODUCT DEFECT OR FROM THE USE OR INABILITY TO USE THE PRODUCT, WHETHER ARISING IN CONTRACT OR WARRANTY, STATUTE, TORT, STRICT LIABILITY, NEGLIGENCE, OR OTHERWISE.**

Banner Engineering Corp. reserves the right to change, modify or improve the design of the product without assuming any obligations or liabilities relating to any product previously manufactured by Banner Engineering Corp. Any misuse, abuse, or improper application or installation of this product or use of the product for personal protection applications when the product is identified as not intended for such purposes will void the product warranty. Any modifications to this product without prior express approval by Banner Engineering Corp will void the product warranties. All specifications published in this document are subject to change; Banner reserves the right to modify product specifications or update documentation at any time. Specifications and product information in English supersede that which is provided in any other language. For the most recent version of any documentation, refer to: www.bannerengineering.com.

For patent information, see www.bannerengineering.com/patents.

© Banner Engineering Corp. All rights reserved.
www.bannerengineering.com

LinkedIn

X

Facebook

Instagram



© 2025. All rights reserved.