Datasheet

Each S4B Cascade Cordset Kit includes:

- Two host RD (removable disconnect) cordsets (A in the figure below)
- Two terminal RD cordsets (C in the figure below)
- An appropriate number of center RD cordsets, depending on the number of sensors in the cascade (B in the figure below)
  - Two-sensor cascade kits: 0 RD cordsets
  - Three-sensor cascade kits: 2 RD cordsets
  - Four-sensor cascade kits: 4 RD cordsets

Cascade System Cordset Kits

Model	Length	Use	Includes	Quantity
S4BA-Cascade-2	0.4 m (1.31 ft)	Two sensor cascade system with 5-pin male M12 host	DES4-M51-F51-D	2
			DES4-M51-RTP	
S4BA-Cascade-3	0.4 m (1.31 ft)	Three sensor cascade system with 5-pin male M12 host	DES4-M51-F51-D	2
			DES4-M51-F51-D-REM	2
			DES4-M51-RTP	2
S4BA-Cascade-4	0.4 m (1.31 ft)	Four sensor cascade system with 5-pin male M12 host	DES4-M51-F51-D	2
			DES4-M51-F51-D-REM	4
			DES4-M51-RTP	2
S4BA-Cascade-2-M12M8	0.4 m (1.31 ft)	Two sensor cascade system with 8-pin male M12 host	DES4-M81-F51-D	2
			DES4-M51-RTP	2
S4BA-Cascade-3-M12M8	0.4 m (1.31 ft)	Three sensor cascade system with 8-pin male M12 host	DES4-M81-F51-D	2
			DES4-M51-F51-D-REM	2
			DES4-M51-RTP	2
S4BA-Cascade-4-M12M8	0.4 m (1.31 ft)	Four sensor cascade system with 8-pin male M12 host	DES4-M81-F51-D	2
			DES4-M51-F51-D-REM	4
			DES4-M51-RTP	2

Cascade Connections

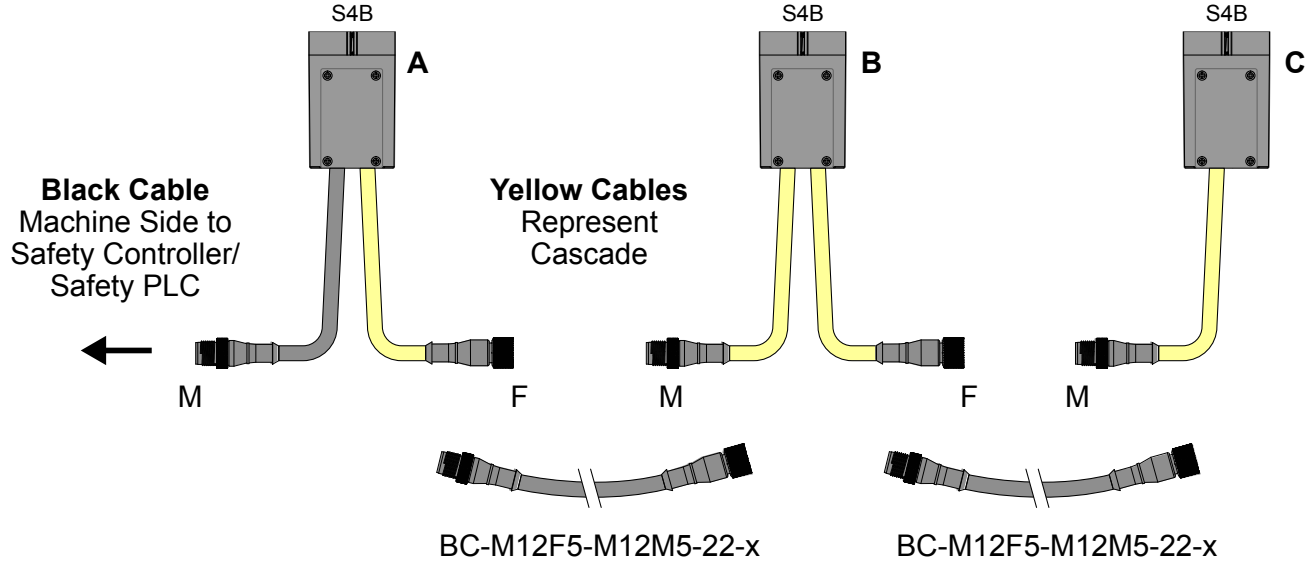

RD (removeable disconnect) cordsets A are either DES4-M51-F51-D (5-pin machine cable) or DES4-M81-F51-D (8-pin machine cable), depending on the kit ordered. Install these on the host emitter and receiver of the cascade system.

RD cordsets C are DES4-M51-RTP. Install these on the last remote/guest emitter and receiver of the cascade system.

Original Instructions
26-Jan-26

© Banner Engineering Corp. All rights reserved.
www.bannerengineering.com

241513
p/n: 241513 Rev. B

ПРОМЭЛЕКТРОНИКА/ sales@prom-elec.com

RD cordsets B are DES4-M51-F51-REM. Install these on the center remote/guest emitter(s) and receiver(s) in cascade systems of three or four pairs of S4B sensors.

To install the RD cordsets onto a sensor:

1. Remove the cover from the sensor.
2. Gently place the RD cordset onto the unit.
3. Hand-tighten the four screws.

For more detailed information on installing the S4B system and other available accessories and/or cables, see the *S4B Safety Light Curtain Instruction Manual*, p/n 230287, available at www.bannerengineering.com.

Banner Engineering Corp Limited Warranty

Banner Engineering Corp. warrants its products to be free from defects in material and workmanship for one year following the date of shipment. Banner Engineering Corp. will repair or replace, free of charge, any product of its manufacture which, at the time it is returned to the factory, is found to have been defective during the warranty period. This warranty does not cover damage or liability for misuse, abuse, or the improper application or installation of the Banner product.

THIS LIMITED WARRANTY IS EXCLUSIVE AND IN LIEU OF ALL OTHER WARRANTIES WHETHER EXPRESS OR IMPLIED (INCLUDING, WITHOUT LIMITATION, ANY WARRANTY OF MERCHANTABILITY OR FITNESS FOR A PARTICULAR PURPOSE), AND WHETHER ARISING UNDER COURSE OF PERFORMANCE, COURSE OF DEALING OR TRADE USAGE.

This Warranty is exclusive and limited to repair or, at the discretion of Banner Engineering Corp., replacement. **IN NO EVENT SHALL BANNER ENGINEERING CORP. BE LIABLE TO BUYER OR ANY OTHER PERSON OR ENTITY FOR ANY EXTRA COSTS, EXPENSES, LOSSES, LOSS OF PROFITS, OR ANY INCIDENTAL, CONSEQUENTIAL OR SPECIAL DAMAGES RESULTING FROM ANY PRODUCT DEFECT OR FROM THE USE OR INABILITY TO USE THE PRODUCT, WHETHER ARISING IN CONTRACT OR WARRANTY, STATUTE, TORT, STRICT LIABILITY, NEGLIGENCE, OR OTHERWISE.**

Banner Engineering Corp. reserves the right to change, modify or improve the design of the product without assuming any obligations or liabilities relating to any product previously manufactured by Banner Engineering Corp. Any misuse, abuse, or improper application or installation of this product or use of the product for personal protection applications when the product is identified as not intended for such purposes will void the product warranty. Any modifications to this product without prior express approval by Banner Engineering Corp will void the product warranties. All specifications published in this document are subject to change; Banner reserves the right to modify product specifications or update documentation at any time. Specifications and product information in English supersede that which is provided in any other language. For the most recent version of any documentation, refer to: www.bannerengineering.com.

For patent information, see www.bannerengineering.com/patents.

© Banner Engineering Corp. All rights reserved.
www.bannerengineering.com