TABLE OF LENGTHS				
P/N	MODEL NO.	L1	L2	L3
809653	PKW4MS-2	2035[80.11]	50[1.97]	7[0.28]
809654	PKW4MS-5	5000[196.85]	50[1.97]	7[0.28]
809655	PKW4MS-9	9035[355.71]	50[1.97]	7[0.28]

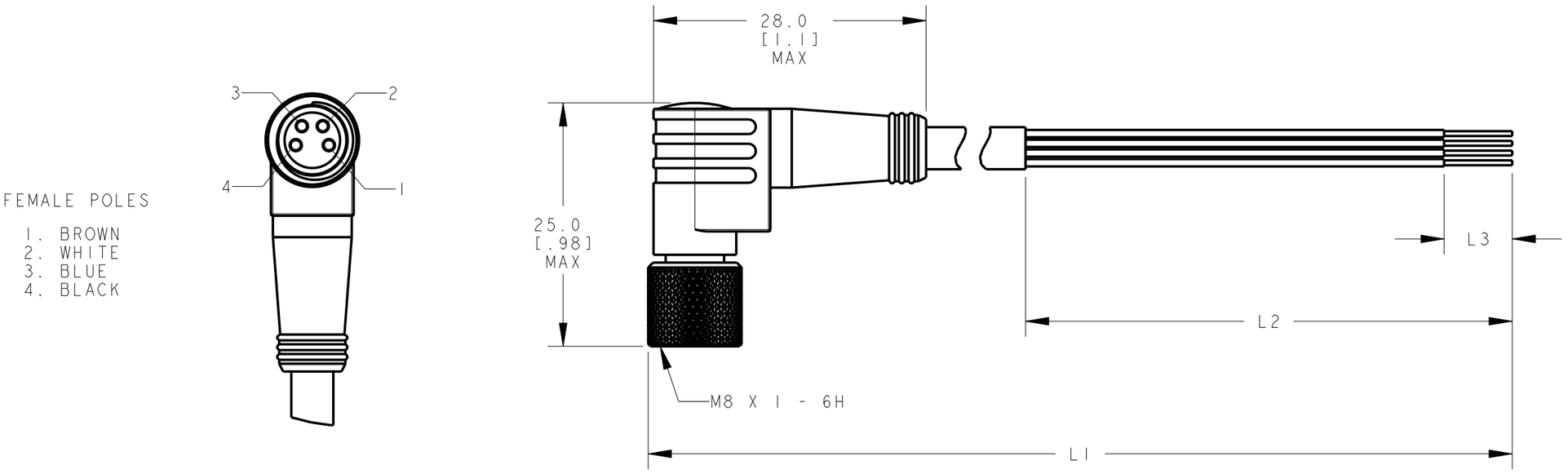

NOTES:
1. ALL DIMENSIONS ARE MILLIMETERS [INCHES] UNLESS OTHERWISE NOTED.
2. REFER TO "www.bannerengineering.com" FOR ADDITIONAL DATA AND SPECIFICATIONS.

This drawing is the property of BANNER ENGINEERING CORP. Any use or reproduction, in any form, without prior written permission of Banner is prohibited.
© 2015 Banner Engineering Corp.

THIRD ANGLE PROJECTION

BANNER ENGINEERING CORP.
www.bannerengineering.com

TITLE

PKW4MS-X

SIZE	DRAWING NO.	REV.
B	217960	A
SCALE 2:1		SHEET 1 OF 1

CREO

ПРОМЭЛЕКТРОНИКА/ sales@prom-elec.com