MULTI-BEAM 3- and 4-wire AC Power Block Modules

Datasheet

For MULTI-BEAM modular photoelectric sensors

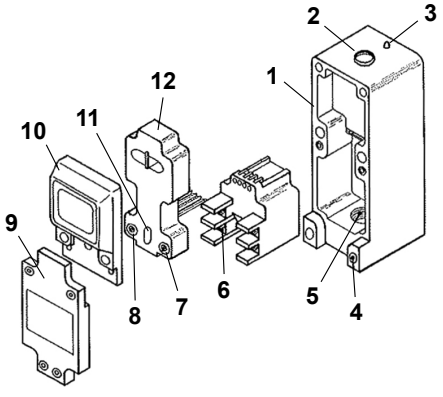

1. Scanner block housing
2. Sensitivity adjustment
3. Status/alignment indicator LED
4. Mounting hole
5. Conduit entrance
6. Wiring terminals on the power block
7. Logic timing adjustment
8. Logic timing adjustment
9. Lower cover, supplied with the scanner block
10. Upper cover (lens), supplied with the scanner block
11. Light/dark operate select
12. Logic module

MULTI-BEAM modular components (scanner block, power block, and logic module) are all purchased separately.

WARNING:

- **Do not use this device for personnel protection**
- Using this device for personnel protection could result in serious injury or death.
- This device does not include the self-checking redundant circuitry necessary to allow its use in personnel safety applications. A device failure or malfunction can cause either an energized (on) or de-energized (off) output condition.

Models

Models	Input	Certifications	Output	Specifications
PBA	105–130 V AC, 50/60 Hz	CE, cULus IND. CONT. EQ. 447Y LISTED, CSA	SPST solid-state switch for AC, ¾ A maximum (derated to ½ at 70 °C). 10 A maximum inrush for one second or 30 A for one AC cycle (non-repeating).	On-state voltage drop of less than 2.5 V AC at full load. Off-state leakage current less than 100 µA.
PBB	210–250 V AC, 50/60 Hz			
PBD	22–28 V AC, 50/60 Hz			
PBD-2	11–13 V AC, 50/60 Hz	N/A		
PBAT	105–130 V AC, 50/60 Hz	CE, cULus IND. CONT. EQ. 447Y LISTED, CSA	SPST isolated solid-state switch; 100 mA maximum (no inrush capacity), 200 V DC maximum, 140 V AC maximum.	On-state voltage drop of less than 3 V at full load. Off-state leakage current less than 100 µA.
PBBT	210–250 V AC, 50/60 Hz		SPST isolated solid-state switch; 100 mA maximum (no inrush capacity), 350 V DC maximum, 250 V AC maximum.	
PBA-1	105–130 V AC, 50/60 Hz	CE, CSA	N/A	N/A
PBB-1	210–250 V AC, 50/60 Hz			
PBD-1	22–28 V AC, 50/60 Hz			

ПРОМЭЛЕКТРОНИКА/ sales@prom-elec.com

Models	Input	Certifications	Output	Specifications
PBO	105–130 V AC, 50/60 Hz	CE c UL us IND. CONT. EQ. 447Y LISTED CSA	SPST isolated optically coupled transistor switch (will switch DC only); 50 mA maximum, 30 V DC maximum.	On-state saturation voltage less than 1 V at 2 mA, less than 1.3 mA at 50 mA. Off-state leakage current less than 10 µA.
PBOB	210–250 V AC, 50/60 Hz			
PBAM	105–130 V AC, 50/60 Hz	CE c UL us IND. CONT. EQ. 447Y LISTED CSA	8 V DC at 8 mA maximum (short circuit proof).	N/A
PBAQ	105–130 V AC, 50/60 Hz	CE CSA	SPST isolated solid-state switch; normally closed, ¾ A maximum (derated to ½ A at 70 °C). 10 A maximum inrush for one second or 30 A for one AC cycle (non repeating). **Note:** The output of the PBAQ will not conduct when power is removed from terminal #1 or #2.	On-state voltage drop of less than 2.5 V AC at full load. Off-state leakage current less than 100 µA.

Overview

A Banner MULTI-BEAM Sensor is a compact modular self-contained photoelectric switch consisting of three components: a scanner block, a power block, and a logic module.

The **scanner** block comprises the housing for the sensor and contains a complete modulated photoelectric amplifier, the emitter and receiver optoelements and lenses, and space for the other modules.

The **power** block module provides the interface between the scanner block and the external circuit. It contains a power supply for the MULTI-BEAM plus a switching device (except in emitter-only power blocks) to interface the sensor to the circuit to be controlled.

The **logic** module interconnects the power block and scanner block both electrically and mechanically. It provides the desired timing logic function (if any) plus the ability to program the output for either light- or dark-operate.

The emitters of MULTI-BEAM opposed mode emitter/receiver pairs do not require a logic module. Emitter scanner blocks are supplied with a blade-pin to interconnect the scanner block and power block. Power block and logic modules are purchased separately. This modular design, with field-replaceable power block and logic modules, permits a large variety of sensor configurations, resulting in exactly the right sensor for any photoelectric application.

Power Block Modules



MULTI-BEAM 3- and 4-wire AC power block modules provide regulated low voltage DC to power the scanner block module and logic module in MULTI-BEAM modular photoelectric sensors. They also contain a solid-state infinite-life switch (except in emitter-only scanner blocks) for switching external circuitry.

Connections are made to heavy-duty screw terminals which accept up to #14 gauge wire (no lugs are necessary). All power blocks are epoxy-encapsulated and rated for –40 °C to +70 °C (–40 °F to +158 °F). Response times are determined by the scanner block used.

All 3- and 4-wire AC power block modules are color-coded red.

If you are unable to find the power block for your interface, contact Banner Engineering.

Wiring Descriptions and Diagrams

PBA, PBB, PBD, and PBD-2 Power Blocks

The PBA, PBB, PBD, and PBD-2 power blocks are the most commonly used for AC operation. They are intended to switch the same AC voltage as is used to power the MULTI-BEAM sensor. However, the output of all four blocks is rated for 250 V AC maximum, and is able to switch a voltage which is different than the supply as long as both AC circuits share a common neutral. For example, a PBA could switch a 24 V AC door chime, etc. Observe local codes when mixing AC voltages in a wiring chamber.

The blocks are designed to handle the inrush current of AC inductive loads like motor starters and solenoids. The holding current specification of any inductive load should not exceed the 750 mA output rating. There is no minimum load requirement. The power blocks will interface directly to all AC programmable controller inputs. All contain built-in transient suppression to prevent false turn-on or damage from inductive loads and line spikes. Outputs of multiple power blocks may be wired in series or parallel for the AND logic function and the OR logic function.

Figure 1. Wiring of PBA, PBB, PBD, and PBD-2

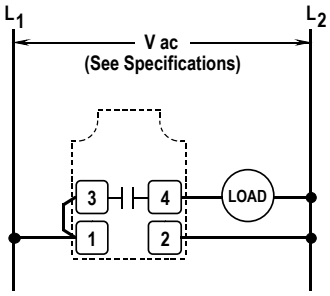

Wiring to Simple AC Load

The AC voltage is connected to terminals #1 and #2 to provide power to the MULTI-BEAM. The solid-state output switch behaves as if there were a contact between terminals #3 and #4. L1 is most conveniently applied to terminal #3 by jumpering terminals #1 and #3 inside the MULTI-BEAM.

The outputs of all five power block models are rated for 250 V AC maximum, and can switch an AC voltage which is different from the supply as long as both AC circuits share a common neutral. Observe local wiring codes when mixing AC voltages in a common wiring chamber.

Because the output switch is a solid-state device, contact continuity cannot be checked by means of an ohmeter, continuity tester, etc. To check the functioning of the output switch, a load must be installed and tested along with the MULTI-BEAM.

CAUTION: The output switch could be destroyed if the load becomes a short circuit (that is, if L1 and L2 are connected directly across terminals #3 and #4).

Note: Output switching capacity is ¾ A maximum.

See also General Wiring on page 5 for additional wiring setups.

PBAT and PBBT Power Blocks

Power block models PBAT and PBBT have an isolated solid-state output switch which may be used to switch either AC or DC. The switch is rated at 100 mA maximum, and there is no capacity for inrush. As a result, these power blocks should not be used to switch AC inductive loads. However, 100 mA is enough capacity to switch many inductive DC loads like small relays and solenoids.

Models PBAT and PBBT interface directly to all AC programmable controller inputs.

Note: Because the saturation voltage of these power blocks is typically greater than 1 volt, they should not be used to interface 5 V DC logic circuits such as TTL. Instead, use special-order power block model PBOL or PBOBL.

Figure 2. Wiring of PBAT and PBBT

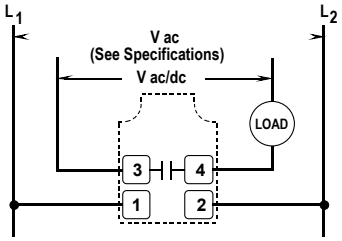

PBA-1, PBB-1, and PBD-1 Power Blocks

The PBA-1, PBB-1, and PBD-1 power blocks are used to power emitter-only scanner blocks (models SBE, SBED, SBEX, SBEV, SBEXD, SBEF, SBEXF). Models PBA-1, PBB-1, and PBD-1 save the cost of the output circuitry that must be included in other power block models (these other power blocks may, however, be used to power emitter-only scanner blocks, with the output switching circuitry going unused). Emitter assemblies do not require logic modules.

Wiring to AC Emitter

MULTI-BEAM emitter-only AC power blocks connect directly across the AC line.

Emitter models: SBE, SBED, SBEX, SBEV, SBEXD, SBEF, and SBEXF.

Figure 3. Wiring of PBA-1, PBB-1 and PBD-1

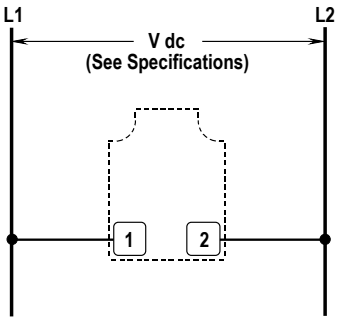

PBO and PBOB Power Blocks

The PBO and PBOB power blocks are designed to interface an electronic circuit (or control) at a low DC voltage level, but where there is no DC supply voltage available to power the MULTI-BEAM. Because the output is isolated it may be wired to either source or sink current, and multiple units may be wired in either series or parallel. The output of model PBO or PBOB will directly interface Banner component system logic modules.

Note: The 1-volt saturation prevents direct interfacing to 5-volt logic systems such as TTL. For these low-voltage interfaces, use instead special order model PBOL or PBOBL.

Figure 4. Wiring of PBO and PBOB

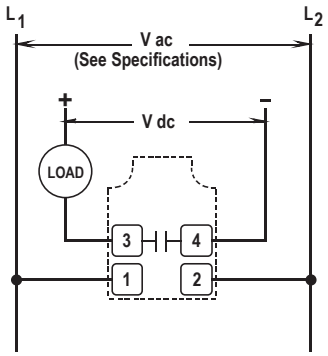

Wiring to Counter

Power block models PBO and PBOB are designed to power the MULTI-BEAM with AC voltage and to permit the sensor output to interface with low voltage DC circuits and devices. A common situation involves inputting to battery-powered LCD totalizers, rate meters, etc. The output switch is the transistor of an optical coupler, which may be connected to switch DC common to the count input. Polarity must be observed.

PBAM Power Blocks

Model PBAM is a special-purpose power block that is powered by 120 V AC, and provides a low level source of DC output voltage when the sensor's output is energized. It is used primarily to power low voltage audio tone annunciators such as SONALERTS. The PBAM may also provide a signal to many types of logic devices. The output is approximately 8 V DC when energized, and the output impedance is 1 K ohm (short circuit proof). The output is totally isolated from the AC supply voltage, and may be used to provide an input signal to many line-powered or battery-powered electronic totalizers.

Figure 5. Wiring of PBAM

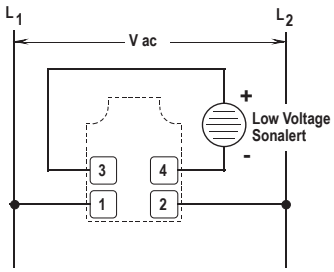

PBAQ Power Blocks

Model PBAQ is identical to model PBA except that the solid-state output contact is normally closed instead of normally open. It is used where it is necessary to have the load de-energize when something is sensed (for example, one shot pulse to de-energize load). When no timing logic is involved, model LM3 can program any power block for normally open or normally closed operation via the light/dark operate jumper.

Note: Model PBAQ is not compatible with logic module models LM5 and LM5-14. For normally closed on-delay logic, use PBA with LM5R and reverse the light/dark function.

Note: The output of the PBAQ will not conduct when power is removed from terminal #1 or #2.

Figure 6. Wiring of PBAQ

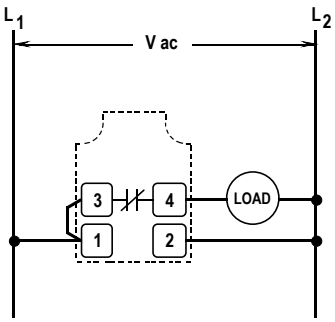

Wiring to Simple AC Load

The AC voltage is connected to terminals #1 and #2 to provide power to the MULTI-BEAM. The solid-state output switch behaves as if there were a contact between terminals #3 and #4. L1 is most conveniently applied to terminal #3 by jumpering terminals #1 and #3 inside the MULTI-BEAM.

The outputs of all five power block models are rated for 250 V AC maximum, and can switch an AC voltage which is different from the supply as long as both AC circuits share a common neutral. Observe local wiring codes when mixing AC voltages in a common wiring chamber.

Because the output switch is a solid-state device, contact continuity cannot be checked by means of an ohmeter, continuity tester, etc. To check the functioning of the output switch, a load must be installed and tested along with the MULTI-BEAM.

CAUTION: The output switch could be destroyed if the load becomes a short circuit (that is, if L1 and L2 are connected directly across terminals #3 and #4).

Note: Output switching capacity is ¾ A maximum.

See also General Wiring on page 5 for additional wiring setups.

General Wiring

Figure 7. Wiring in Parallel with Other MULTI-BEAMs

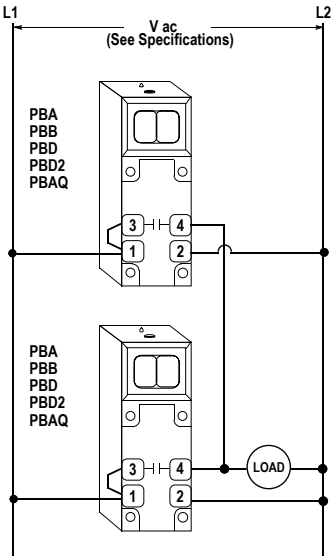

Any number of 3- and 4-wire MULTI-BEAM power block outputs may be connected in parallel to a load. Parallel sensor connection is usually used to yield OR logic (that is, if an event occurs at any sensor, the load is energized). The total off-state leakage current through the load is the sum of the leakage current of the individual power blocks. However, the maximum leakage current of MULTI-BEAM 3- and 4-wire AC power blocks is only 100 µA. As a result, installation of an artificial load resistor in parallel with the load is necessary only for a large number of sensors wired in parallel to a light load.

Figure 8. Wiring in Series with Other MULTI-BEAMs

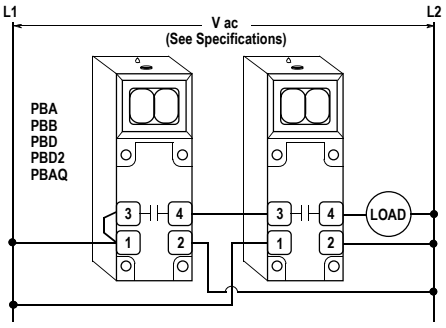

MULTI-BEAM 3- and 4-wire AC power blocks may be wired in series with each other for the AND logic function. The total voltage drop across the series will be the sum of the individual voltage drops across each power block (approximately 3 V per block). With most loads, 10 or more power blocks may be wired in series.

Figure 9. Wiring in Parallel with Contacts or Switches

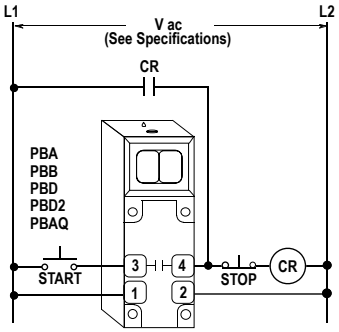

Any number of hard contacts may be wired in parallel with one or more MULTI-BEAM 3- and 4-wire power blocks. All models have less than 100 µA (0.1 mA) of off-state leakage current. The load operates when either the contacts close or the MULTI-BEAM output is energized.

Figure 10. Wiring in Series with Contacts or Switches

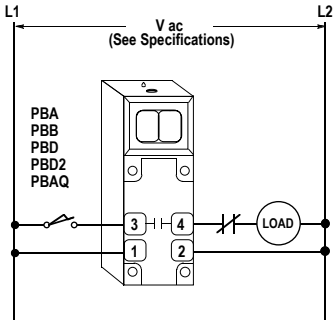

Terminals #3 and #4 of MULTI-BEAM 3- and 4-wire power blocks may be connected in series with one or more hard contacts. The load operates only when all contacts are closed and the MULTI-BEAM output is energized.

Figure 11. Wiring to a Programmable Logic Controller (PLC)

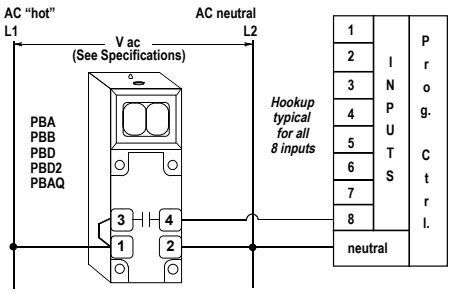

Interfacing to a PLC I/O is direct with MULTI-BEAM 3- and 4-wire AC power blocks. All models have less than 100 µA (0.1 mA) of off-state leakage current. If you have a question on wiring to a particular brand of PLC, contact Banner Engineering.

Banner Engineering Corp. Limited Warranty

Banner Engineering Corp. warrants its products to be free from defects in material and workmanship for one year following the date of shipment. Banner Engineering Corp. will repair or replace, free of charge, any product of its manufacture which, at the time it is returned to the factory, is found to have been defective during the warranty period. This warranty does not cover damage or liability for misuse, abuse, or the improper application or installation of the Banner product.

THIS LIMITED WARRANTY IS EXCLUSIVE AND IN LIEU OF ALL OTHER WARRANTIES WHETHER EXPRESS OR IMPLIED (INCLUDING, WITHOUT LIMITATION, ANY WARRANTY OF MERCHANTABILITY OR FITNESS FOR A PARTICULAR PURPOSE), AND WHETHER ARISING UNDER COURSE OF PERFORMANCE, COURSE OF DEALING OR TRADE USAGE.

This Warranty is exclusive and limited to repair or, at the discretion of Banner Engineering Corp., replacement. **IN NO EVENT SHALL BANNER ENGINEERING CORP. BE LIABLE TO BUYER OR ANY OTHER PERSON OR ENTITY FOR ANY EXTRA COSTS, EXPENSES, LOSSES, LOSS OF PROFITS, OR ANY INCIDENTAL, CONSEQUENTIAL OR SPECIAL DAMAGES RESULTING FROM ANY PRODUCT DEFECT OR FROM THE USE OR INABILITY TO USE THE PRODUCT, WHETHER ARISING IN CONTRACT OR WARRANTY, STATUTE, TORT, STRICT LIABILITY, NEGLIGENCE, OR OTHERWISE.**

Banner Engineering Corp. reserves the right to change, modify or improve the design of the product without assuming any obligations or liabilities relating to any product previously manufactured by Banner Engineering Corp. Any misuse, abuse, or improper application or installation of this product or use of the product for personal protection applications when the product is identified as not intended for such purposes will void the product warranty. Any modifications to this product without prior express approval by Banner Engineering Corp will void the product warranties. All specifications published in this document are subject to change; Banner reserves the right to modify product specifications or update documentation at any time. Specifications and product information in English supersede that which is provided in any other language. For the most recent version of any documentation, refer to: www.bannerengineering.com.

For patent information, see www.bannerengineering.com/patents.

© Banner Engineering Corp. All rights reserved