EZ-LIGHT® Indicators for 3-Color, 7-Function

Features

DC-operated LED indicators with solid ON or flashing capability and an integral M12 quick-disconnect connector[1]

Choose from red, yellow, or green ON, flashing, or rotating (depending on wiring)[2].

To view or download the latest technical information about this product, including specifications, dimensions, accessories, and wiring, go to www.bannerengineering.com.

WARNING:
- **Do not use this device for personnel protection**
- Using this device for personnel protection could result in serious injury or death.
- This device does not include the self-checking redundant circuitry necessary to allow its use in personnel safety applications. A device failure or malfunction can cause either an energized (on) or de-energized (off) output condition.

Models

Models		Construction	Inputs
	M18GRY2PQ	Nickel-plated brass housing, M18x1 thread; thermoplastic diffuser. Fully encapsulated; IP67.	PNP
	M18GRY2NQ		NPN
	K50LGRY2PQ	30 mm threaded polycarbonate base, translucent polycarbonate dome. Fully encapsulated; IP67, IP69K per ISO 20653.	PNP
	K50LGRY2NQ		NPN
	K50FLGRY2PQ	Polycarbonate base, translucent polycarbonate dome. Fully encapsulated; IP67, IP69K per ISO 20653.	PNP
	K50FLGRY2NQ		NPN
	K80LGRY2PQ [3]	ABS and polycarbonate base, translucent polycarbonate dome. Electronics fully encapsulated; IP67.	PNP
	K80LGRY2NQ		NPN

The following models are no longer available for order but are still covered by the information in this document.

Models		Construction	Inputs
	T30GRY2PQ	Thermoplastic polyester housing, thermoplastic diffuser. Fully encapsulated; IP67.	PNP
	T30GRY2NQ		NPN

Other Models: Standard integral quick-disconnect connector models are listed (mating cordset required). To order 2 m (6.5 ft) cabled models, omit suffix **Q** from model number (example, M18GRY2P). To order models with 150 mm (6 in) PVC-jacketed cable with 5-pin M12 quick-disconnect connector, replace suffix **Q** with **QP** (example, M18GRY2PQP).

Wiring

Select from 7 operating schemes, depending on wiring

LED Function	PNP Models				NPN Models			
	Brown Wire	White Wire	Black Wire	Blue Wire	Blue Wire	White Wire	Black Wire	Brown Wire
Red ON	+V DC			0 V DC	0 V DC			+V DC
Red Flashing	+V DC		+V DC	0 V DC	0 V DC		0 V DC	+V DC
Yellow ON		+V DC		0 V DC		0 V DC		+V DC

Continued on page 2

[1] Pin 5 is not used; connects to 4-wire quick-disconnect cordset. If a cordset other than those specified in this document is used, use a 5-pin mating cordset.
[2] Contact Factory for other colors/color combinations, including: blue, white, orange.
[3] K80L Models: Standard integral 5-pin M12 quick-disconnect connector models are listed (mating cordset required). For terminal-wired model, omit suffix Q (example, K80LGRY2P).

Original Instructions
19-Jun-25

© Banner Engineering Corp. All rights reserved.
www.bannerengineering.com

121902
p/n: 121902 Rev. L

ПРОМЭЛЕКТРОНИКА/ sales@prom-elec.com

Continued from page 1

LED Function	PNP Models				NPN Models			
	Brown Wire	White Wire	Black Wire	Blue Wire	Blue Wire	White Wire	Black Wire	Brown Wire
Yellow Flashing	+V DC	+V DC		0 V DC	0 V DC	0 V DC		+V DC
Green ON			+V DC	0 V DC			0 V DC	+V DC
Green Flashing		+V DC	+V DC	0 V DC		0 V DC	0 V DC	+V DC
Rotating Red-Green-Yellow	+V DC	+V DC	+V DC	0 V DC	0 V DC	0 V DC	0 V DC	+V DC

Only quick-disconnect wiring is shown; cabled wiring is functionally identical.

PNP Models

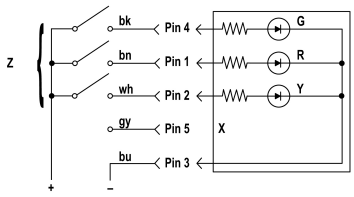

NPN Models

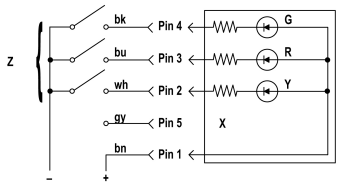

G = Green
R = Red
Y = Yellow
X = Not Used

Specifications

Supply Voltage and Current

M18 Models: 10 V DC to 30 V DC at 40 mA max.

T30 Models: 10 V DC to 30 V DC at 50 mA max.

K50L, K50FL and K80L Models: 18 to 30 V DC at 50 mA max.

Indicators

Entire translucent diffuser or dome provides indication.

LEDs are independently selected: Green, Red, Yellow, ON steady or flashing.

For other colors/combinations, contact Factory for availability

Connections

K80L Models: Integral 5-pin M12 male quick-disconnect connector standard. Terminal-wired models available for use with bulk cable; compression fitting optional. Contact Factory for cable information.

Other Models: Integral 5-pin M12 male quick-disconnect connector (Q); 150 mm (6 in) PVC-jacketed cable with a 5-pin M12 male quick-disconnect connector (QP), (do not use center pin 5); or 2 m (6.5 ft) unterminated 5-wire PVC-jacketed cable

Operating Conditions

Temperature: –40 °C to +50 °C (–40 °F to +122 °F)

Input Response Time

Indicator ON: 250 ms (max.)

Indicator OFF: 10 ms (max.)

Indicator Flash Rate

Single Color: 1 second flash rate (500 ms ON)

Three Color: 1.5 second rotation rate (500 ms per color)

Environmental Rating

Rated IP67. K80L has encapsulated electronics only; other models fully encapsulated.

K50L, and K50FL quick-disconnect models meet IP69K per ISO 20653

Cabled models also meet IP69K if the cable and cable entrance are protected from high-pressure spray.

Certifications

All models:

Banner Engineering BV
Park Lane, Culliganlaan 2F bus 3
1831 Diegem, BELGIUM

K50L, K50FL, and T30 models only:

Turck Banner LTD Blenheim House
Blenheim Court
Wickford, Essex SS11 8YT
GREAT BRITAIN

K50L models only:

c UL us LISTED

Required Overcurrent Protection

WARNING: Electrical connections must be made by qualified personnel in accordance with local and national electrical codes and regulations.

Overcurrent protection is required to be provided by end product application per the supplied table.

Overcurrent protection may be provided with external fusing or via Current Limiting, Class 2 Power Supply.

Supply wiring leads < 24 AWG shall not be spliced.

For additional product support, go to www.bannerengineering.com.

Supply Wiring (AWG)	Required Overcurrent Protection (A)	Supply Wiring (AWG)	Required Overcurrent Protection (A)
20	5.0	26	1.0
22	3.0	28	0.8
24	1.0	30	0.5

© Banner Engineering Corp. All rights reserved. www.bannerengineering.com

Dimensions

M18 Models

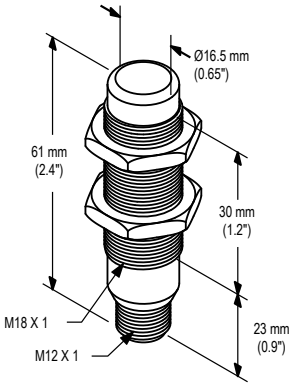

T30 Models

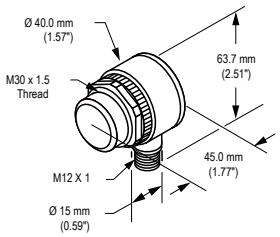

K50L Models

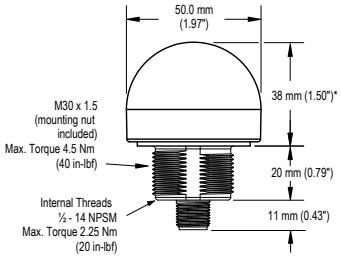

K50FL Models

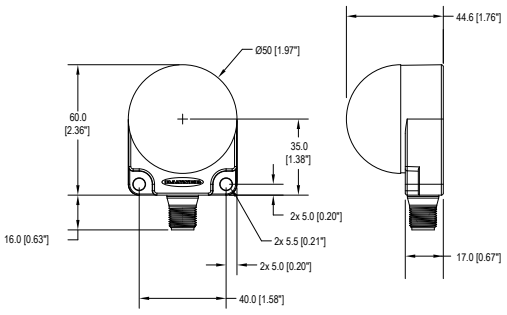

K80L Models

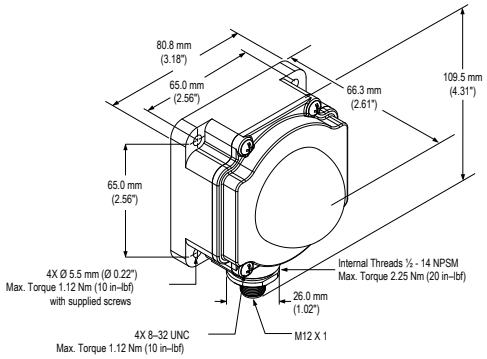

Accessories

Cordsets

4-Pin Single-Ended M12 Female Cordsets					
Model	**Length**	**Style**	**Dimensions**	**Pinout (Female)**	
MQDC-406	2 m (6.56 ft)	Straight	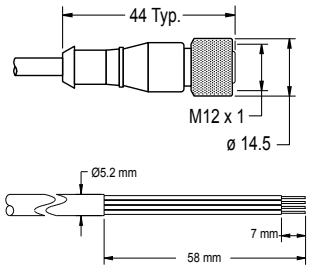	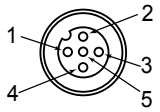	1 = Brown 2 = White 3 = Blue 4 = Black 5 = Not used
MQDC-415	5 m (16.4 ft)				
MQDC-430	9 m (29.5 ft)				
MQDC-450	15 m (49.2 ft)				
MQDC-406RA	2 m (6.56 ft)	Right-Angle	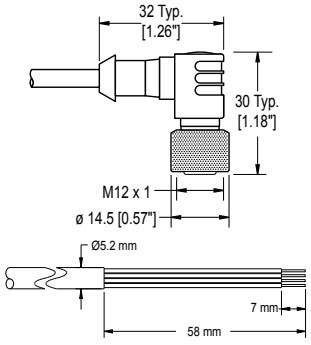	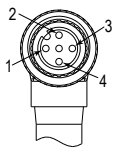	
MQDC-415RA	5 m (16.4 ft)				
MQDC-430RA	9 m (29.5 ft)				
MQDC-450RA	15 m (49.2 ft)				

To order bulk cable for terminal-wired K80L models, contact the factory. If cables other than those listed are used, use a 5-pin mating cable.

© Banner Engineering Corp. All rights reserved. www.bannerengineering.com

Brackets

For use with M18 and T18 models or base-mount T30 models:

SMB18A

- Right-angle mounting bracket with a curved slot for versatile orientation
- 12-ga. stainless steel
- 18 mm sensor mounting hole
- Clearance for M4 (#8) hardware

Hole center spacing: A to B = 24.2**Hole size:** A = ø 4.6, B = 17.0 × 4.6, C = ø 18.5

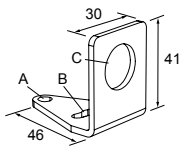

Other available 18 mm dia. brackets:
SMB1815SF
SMB18Q
SMB18SF
SMB312PD
SMBAMS18RA
SMBAMS18P

For use with T30 models or base-mount K50L models:

SMB30A

- Right-angle bracket with curved slot for versatile orientation
- Clearance for M6 (¼ in) hardware
- Mounting hole for 30 mm sensor
- 12-ga. stainless steel

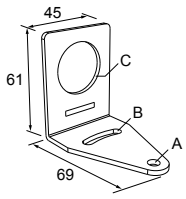

Hole center spacing: A to B=40**Hole size:**A=ø 6.3, B= 27.1 x 6.3, C=ø 30.5

Other available 30 mm diameter brackets are:
SMBAMS30RA
SMBAMS30P
SMB30SC
SMB30SC
SMB30MM
SMB3018SC

K50FL models include a 48 mm (1.9 inch) circular velcro mounting kit for easy mounting with no additional hardware:

SMBDX80DIN

- Black reinforced thermoplastic
- Bracket for mounting on a 35 mm DIN rail

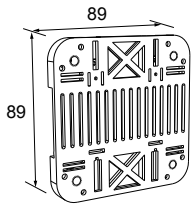

Banner Engineering Corp Limited Warranty

Banner Engineering Corp. warrants its products to be free from defects in material and workmanship for one year following the date of shipment. Banner Engineering Corp. will repair or replace, free of charge, any product of its manufacture which, at the time it is returned to the factory, is found to have been defective during the warranty period. This warranty does not cover damage or liability for misuse, abuse, or the improper application or installation of the Banner product.

THIS LIMITED WARRANTY IS EXCLUSIVE AND IN LIEU OF ALL OTHER WARRANTIES WHETHER EXPRESS OR IMPLIED (INCLUDING, WITHOUT LIMITATION, ANY WARRANTY OF MERCHANTABILITY OR FITNESS FOR A PARTICULAR PURPOSE), AND WHETHER ARISING UNDER COURSE OF PERFORMANCE, COURSE OF DEALING OR TRADE USAGE.

This Warranty is exclusive and limited to repair or, at the discretion of Banner Engineering Corp., replacement. **IN NO EVENT SHALL BANNER ENGINEERING CORP. BE LIABLE TO BUYER OR ANY OTHER PERSON OR ENTITY FOR ANY EXTRA COSTS, EXPENSES, LOSSES, LOSS OF PROFITS, OR ANY INCIDENTAL, CONSEQUENTIAL OR SPECIAL DAMAGES RESULTING FROM ANY PRODUCT DEFECT OR FROM THE USE OR INABILITY TO USE THE PRODUCT, WHETHER ARISING IN CONTRACT OR WARRANTY, STATUTE, TORT, STRICT LIABILITY, NEGLIGENCE, OR OTHERWISE.**

Banner Engineering Corp. reserves the right to change, modify or improve the design of the product without assuming any obligations or liabilities relating to any product previously manufactured by Banner Engineering Corp. Any misuse, abuse, or improper application or installation of this product or use of the product for personal protection applications when the product is identified as not intended for such purposes will void the product warranty. Any modifications to this product without prior express approval by Banner Engineering Corp will void the product warranties. All specifications published in this document are subject to change; Banner reserves the right to modify product specifications or update documentation at any time. Specifications and product information in English supersede that which is provided in any other language. For the most recent version of any documentation, refer to: www.bannerengineering.com.

For patent information, see www.bannerengineering.com/patents.

© Banner Engineering Corp. All rights reserved. www.bannerengineering.com