L-GAGE® LT7 Long-Range Time-of-Flight Laser Sensor

Datasheet

Self-contained Retroreflective- and Diffuse-mode Laser Distance Sensors



- Diffuse model with extremely long distance ranges:
  - Up to 3 meters with black target
  - Up to 7 meters with gray target
  - Up to 10 meters with white target
- Retroreflective model range: up to 250 meters
- Visible pilot laser for easy alignment
- Multiple outputs in each model: discrete outputs can be used for precision background suppression; and alarm outputs together with display provide easy troubleshooting
  - Diffuse models: Two discrete (PNP) plus 2 alarm outputs, and 4-20 mA analog
  - Retroreflective models: Two discrete (PNP) plus 2 alarm outputs
- Fast, easy-to-use TEACH-mode programming via integrated push-buttons or serial interface (no potentiometer adjustments)
- Ongoing LCD display of sensing distance selectable in millimeters or one-hundredths of one inch
- RS422- or SSI-compatible serial connection options

WARNING: Not To Be Used for Personnel **Protection**

Never use this device as a sensing device for personnel **protection.** Doing so could lead to serious injury or death. This device does not include the self-checking redundant circuitry necessary to allow its use in personnel safety applications. A sensor failure or malfunction can cause either an energized or de-energized sensor output condition.

Models

Models	Sensing Mode	Laser Class	Cable[1]	Sensing Range[2]	Discrete Outputs	Analog Output
LT7PIDQ	Diffuse	Class 2 pilot laser; Class 1 sensing laser	Integral 12-pin M16 QD connector	0.5 m to 10 m (20 in to 33 ft)	2 PNP plus 2 Alarm	4 mA to 20 mA
LT7PLVQ	Retroreflective			0.5 m to 250 m (20 in to 820 ft)		N/A

Overview



The sensor has an LCD display and 3 push buttons, which control all programming functions. Serial interface programming can also be accomplished via SSI or RS422.

Four status indicator LEDs on the sensor front/top provide ongoing status of power and outputs.

The sensor has a 2-line LCD display and four LED indicators for ongoing indication of sensing status: Power ON, Alarm, and Outputs 1 and 2.

In Run mode, the current measured value is displayed in the top line of the sensor's display, in millimeters or hundredths of an inch, as selected.

1 Requires a mating cable.
2 Diffuse-mode range specified using a 90% reflective white card. Retroreflective-mode range specified using the specified retroreflective target.

ПРОМЭЛЕКТРОНИКА/ sales@prom-elec.com

Push **Button**	**Functions**
Enter	• Run mode: Switch from Run mode to Programming mode • Programming mode: Select function and move down one menu level • Programming mode: Record value and move up one menu level • Manual Adjust: Move the cursor one position to the left or end the entry when the cursor is at the far left
Left Arrow	• Run mode: Press to light display • Programming mode: Scroll to the next menu position to the left • Manual Adjust: Decrease current digit by 1 • QuickSet menu: Enable TEACH-In of Q1
Right Arrow	• Run mode: Press to light display • Programming mode: Scroll to the next menu position to the right • Manual Adjust: Increase current digit by 1 • QuickSet menu: Enable TEACH-In of Q2
ESC Left Arrow and Right Arrow simultaneously	• Escape: Cancel active function and move up one menu level without saving the new values. Press both arrows simultaneously. The previous value remains unchanged.

Sensing Beam

The sensor uses an infrared Class 1 laser for sensing and a visible, red Class 2 laser (pilot laser) for alignment. Both lasers are aimed at the identical target spot. The laser beams are collimated to focus on a compact spot, even at long sensing distances.

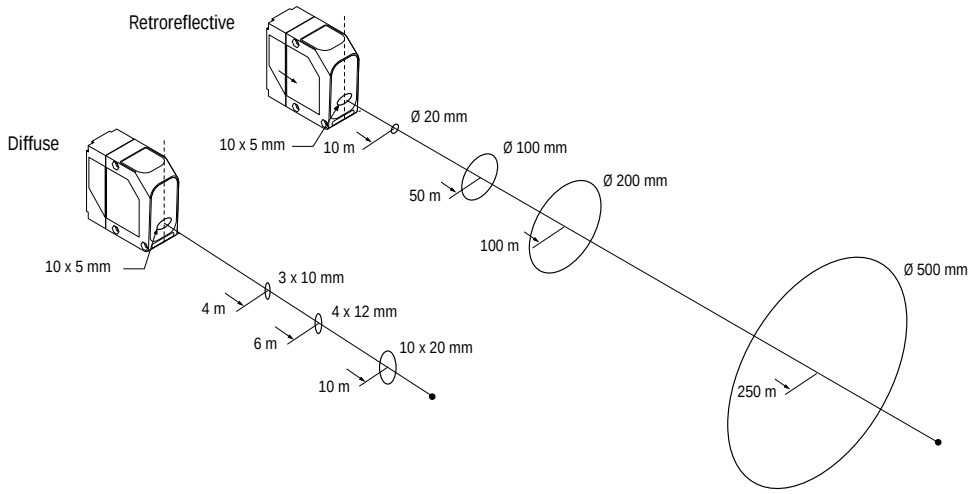

Figure 1. Light Spot Dimensions

Password

The Password function provides a measure of security for the sensor settings. If Password is set to ON, the password must be entered before the sensor is programmed. The password is 1234 and cannot be changed. Security is based on the requirement to know the password entry procedure and the timeout function. If the password is not entered within approximately 10 seconds, the sensor returns to Run mode. Measuring continues in the background while the password is entered.

Measurement **Selection**

Select measurement in millimeters or one-hundredths of an inch. Measurements are displayed without decimal points as shown in the Run mode display. When measuring in inches, the decimal point is two places from the right.



The sensor measures 1475 mm distance to target.

The sensor measures 325.12 inches distance to target.

Figure 2. Run Mode Display

Offset Value

An offset value can be entered or taught. It increases or decreases the measured value to compensate for a mounting position that does not correspond with the zero-point of the sensor. For example, 3000 mm actual distance minus 1200 mm offset equals 1800 mm adjusted output value.

The offset value can be up to 100,000 mm or the corresponding value in inches. The plus and minus symbols are selectable. The offset value applies to all outputs. It reverts to 0 when the Factory Preset function is used.

Factory-Preset **Conditions**

The sensor reverts to the following factory-preset conditions:

TEACH-In:

Q1 and Q2 (discrete) — single switchpoint (full sensing range), ± 5 mm hysteresis
QA (analog) — Mode 1, rising (positive slope, full sensing range)
Offset — 0
Unit — mm
Serial – RS422
Password – OFF

Discrete Outputs (Q1 and Q2) –

Single-point switching

Normally Closed

Normally Open

Two-point switching

Normally Closed

Normally Open

Hysteresis: Manually adjustable in ± 1 mm steps, symmetrically around the switching point. (If upper limit is reached, limit value of measurement range becomes the upper limit.)

Analog Output (model LT7PIDQ only) –

NOTE: Analog A1 and A2 must be at least 300 mm apart.

Mode 1 – Positive Slope

Mode 2 – Negative Slope

Two main TEACH methods:

- Individually teach A1 and A2 limits via manual input.
- Copy Discrete Output limits to Analog.

Figure 3. TEACH mode options for each output

Multiple Outputs

The sensing distance is entered manually or it can be taught with QuickSet and TEACH-In. Either one or two sensing conditions may be taught for each output.

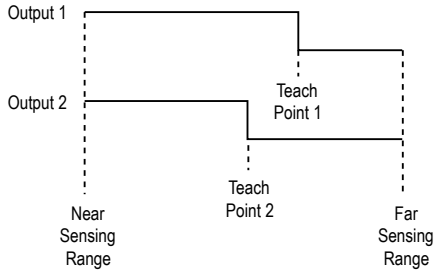

Figure 4. Each discrete output has its own limit for background suppression

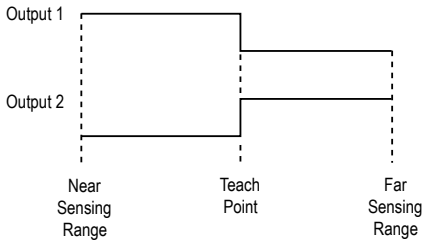

Figure 5. The two discrete outputs share identical limits for background suppression but are complementary

Discrete Outputs

Output 1 and Output 2 can be configured identically, or they can have different limits and configurations. One or two sensing conditions can be taught for each output.

If one condition is taught, the output sets a switching threshold around which the selected hysteresis is applied.

The two-point TEACH result differs, depending on whether QuickSet or TEACH-In is used to set the limits. In QuickSet, the sensor averages the two taught values, then centers a 200 mm window around the averaged point (100 mm to each side). The TEACH-In window limits remain as taught, and the window can be any size.

The selected hysteresis is equally applied to each threshold and window near-limit and far-limit, no matter how they are taught.

Analog Outputs

Analog Limit 1 and Analog Limit 2 must be at least 300 mm apart. Individually teach 4 mA (A1) and 20 mA (A2) points or use the Copy function (selectable in the Analog Output Mode menu) to copy the discrete limits (only the first limits of Discrete Limit 1 and Discrete Limit 2) to the analog output. When copying discrete limits to analog, Discrete Limit 1 and Discrete Limit 2 must be at least 300 mm apart, or the sensor will not copy the limits. The order in which the limits are copied determines the analog output slope. For Mode 1 (positive slope) select:

- Q1, then Q2 — Limit Q1.1 becomes A1 (4 mA); Q2.1 becomes A2 (20 mA)
- Q2, then Q1 — Limit Q1.1 becomes A2 (20 mA); Q2.1 becomes A1 (4 mA)

Manual Adjust

After TEACH mode, use Manual Adjust or Edit to adjust the value for an output. Use Manual Adjust or Edit instead of TEACH mode to input a precise limit value.

Theory of **Operation**

A short electrical pulse drives a semiconductor laser diode to emit a pulse of light. The emitted light is collimated through a lens, which produces a very narrow laser beam. The laser beam bounces off the target, scattering some of its light through the sensor's receiving lens to a photodiode, which creates an electrical pulse. The time interval between the two electrical pulses (transmitting and receiving the beam) is used to calculate the distance to the target, using the speed of light as a constant.

Multiple pulses are evaluated by the sensor's microprocessor, which calculates the position value. The outputs energize when the target is located between the user-programmed window limits or when the preset switching threshold is crossed. Outputs are programmed for a variety of functions.

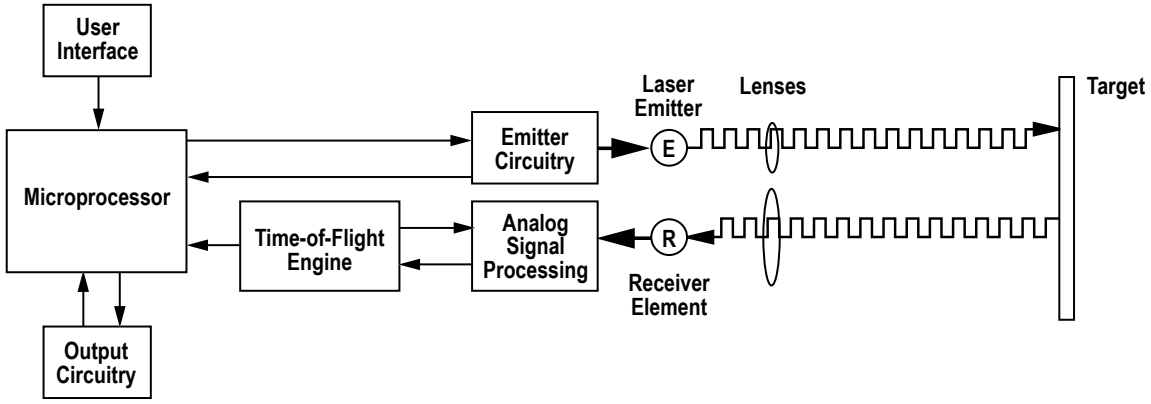

Figure 6. Theory of Operation

Description of Laser Classes

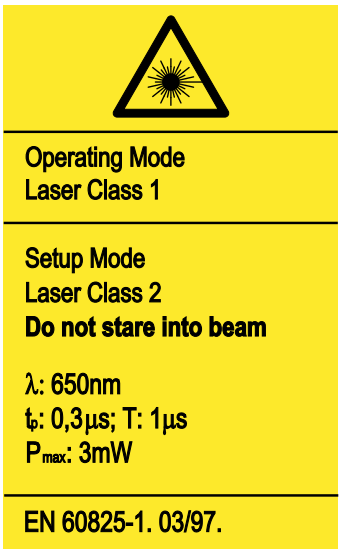

Class 1 (Infrared Sensing Laser)

Lasers that are safe under reasonably foreseeable conditions of operation, including the use of optical instruments for intrabeam viewing.

Reference 60825-1 Amend. 2 © IEC: 2001(E), section 8.2.

Class 2 (Visible Pilot Laser)

Lasers that emit visible radiation in the wavelength range from 400 nm to 700 nm where eye protection is normally afforded by aversion responses, including the blink reflex. This reaction may be expected to provide adequate protection under reasonably foreseeable conditions of operation, including the use of optical instruments for intrabeam viewing.

Reference 60825-1 Amend. 2 © IEC: 2001(E), section 8.2.

Installation

Aligning the Sensor

Align the sensor with or without an alignment aid.

Aligning the Sensor With an Alignment Aid

The alignment aid is useful for the precise alignment of the retroreflective sensor at long distances. With the alignment aid, it is easier to adjust the visible pilot laser spot, even when the spot is on a retroreflective target that is more than 50 m (160 ft) away.



1. Mount the sensor.
2. Affix the alignment aid over the laser emitters on the front of the sensor.
3. Activate any item on the Main menu to turn on the pilot laser.
4. Aim the sensor at the reflector.
5. Look into the sight hole from about 50 mm (2 in) away, rotating the barrel as needed.
6. Turn the focus screw located opposite the sight hole to focus the laser spot as sharply as possible.
7. Adjust the sensor or target position until the laser spot is centered on the target.
8. Tighten the mounting screws and recheck the alignment.
9. Remove the alignment aid.

   While the alignment aid scope is in place, the displayed measurements are inaccurate. The pilot LED is visible only through the sight hole of the alignment aid; the red laser light cannot be seen on the target or another surface.

Aligning the Sensor Without an Alignment Aid

The measuring (sensing) laser is located where the pilot laser spot is.

For fine adjustment, use bracket SMBLT7 with the fine-adjust accessory kit SMBLT7F for an angle of up to ±3° in both X and Y axes.

1. Use the bracket SMBLT7 to mount the sensor.
2. Select any item on the Programming menu and activate it.
   The pilot laser is on.
3. Hold the retroreflector or target at a short distance. For example less than 1 m (3 ft) and verify that the laser light-spot is centered on it.
4. Move the retroreflector or target to its final position, adjust the position as needed, and verify that the laser light-spot remains centered on it.
5. Tighten the screws of the bracket.

Installing the **Mounting** Brackets SMBLT7 and SMBLT7F

These instructions are for the mounting bracket SMBLT7 and the fine-adjust accessory mounting bracket SMBLT7F.

1. Align the pins on the fine-adjust accessory bracket with the holes on the mounting bracket.
2. Bolt the fine-adjust accessory bracket to one or both angles of the mounting bracket.
3. Bolt the mounting bracket onto the mounting surface of the sensor.
4. Loosen the fine-adjust accessory bracket to adjust the laser sensor's alignment with the target.
   Laser sensor and target are aligned.
5. Tighten all bolts.

Wiring Diagrams

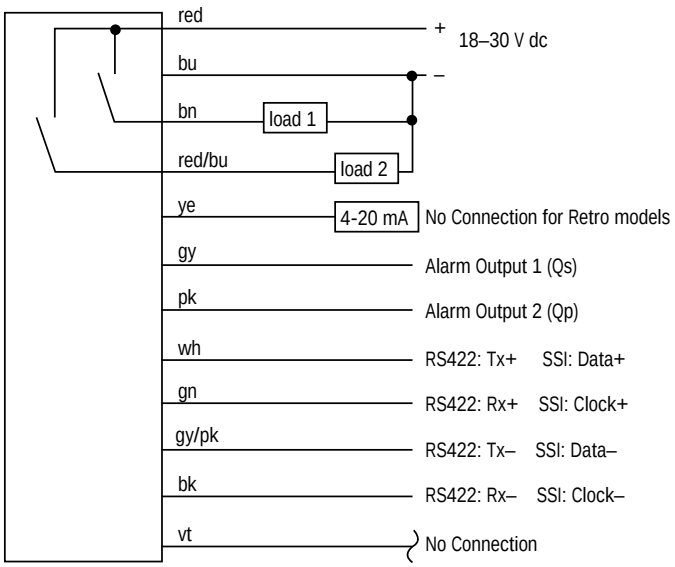

Pin	Name	Cable Color	**Description**
A	TX+	White	RS422: Transmitter data / SSI: Data +
B	Q1	Brown	Discrete Output 1
C	RX+	Green	RS422: Receiver data / SSI: Clock +
D	analog	Yellow	Analog Output 4 mA to 20 mA
E	Qs	Gray	Alarm Output 1
F	Qp	Pink	Alarm Output 2
G	V+	Red	+18 V dc to 30 V dc
H	RX-	Black	RS422: Receiver data / SS1: Clock –
J	NC	Violet	
K	TX-	Gray/Pink	RS422: Transmitter data / SS1: Data –
L	Q2	Red/Blue	Discrete Output 2
M	GND	Blue	0 V (GND)

Installation Notes

Some targets pose specific problems for sensing distances. For example, targets with a stepped plane facing the sensor, a boundary line, or rounded targets. Suggested sensor orientations for typical targets are below.

Recommended Sensor **Orientation**	Not Recommended
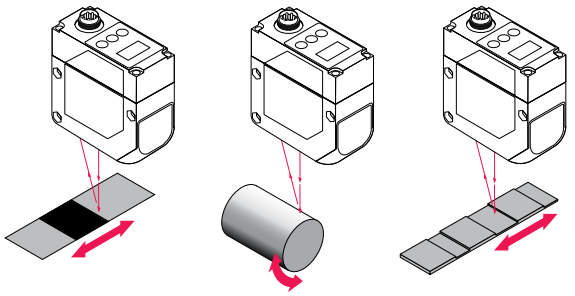	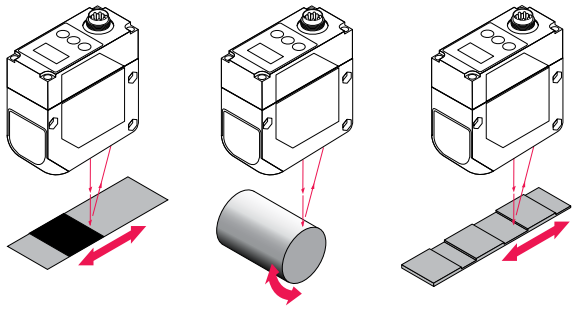

Sensor Programming

The sensor is programmed using three programming buttons and the LCD display or via RS422- and SSI-compatible serial interface connections.

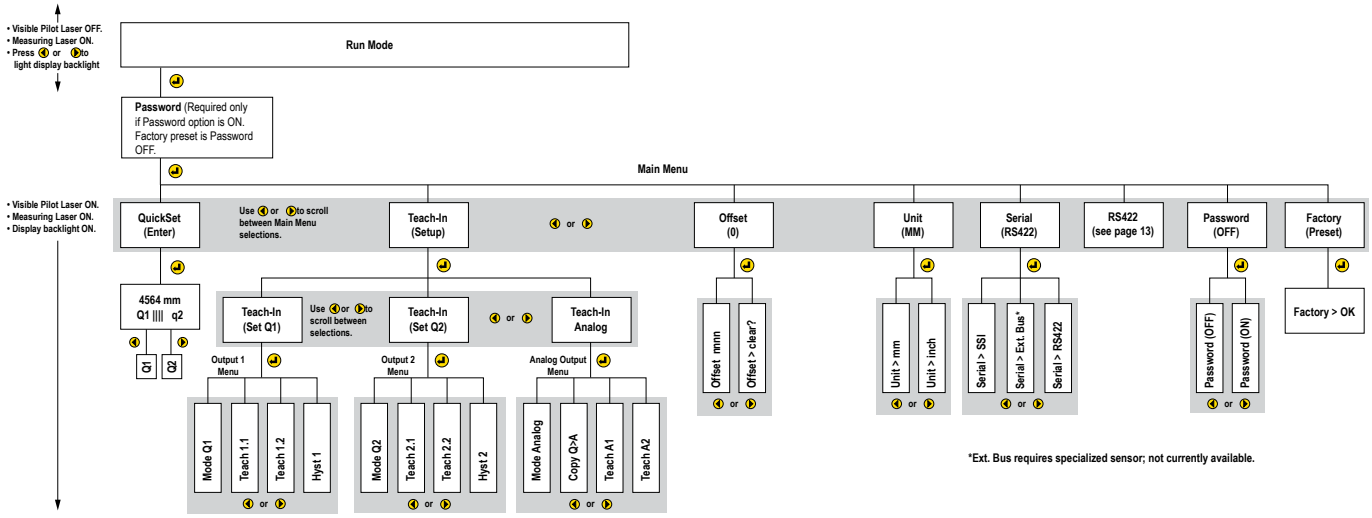

Figure 7. Programming Menu

Accessing the Programming Mode

When Password is set to OFF (factory default setting), the sensor will proceed to the Main menu. To access the Programming mode with the programming buttons, follow the step below:

Press from Run mode.

- The LCD display lights up
- The visible red pilot laser turns ON
- The measurement laser stays ON, alternating with the pilot laser
- The sensor proceeds to QuickSet on the Main menu

Teaching the Outputs with QuickSet

The received signal value is displayed as a bar graph: the more bars, the stronger the received signal. Output Q1 and output Q2 are shown as either ON or OFF by the status indicator LEDs and by the letter Q, which is capitalized (Q1 = Output 1 is ON) or lowercase (q1 = Output 1 is OFF).

To teach the current conditions to the outputs with QuickSet, follow the steps below:

1. Press to teach the current condition to output Q1.
2. Press to teach the current condition to output Q2.
3. Press to save the setting.
4. Press to exit the TEACH-IN menu.

   The TEACH-IN menu also has other programmed TEACH properties.

Accessing Manual Adjust

To adjust the sensor output values with the programming buttons, after TEACH-IN and pressing Enter to save, follow the steps below:

1. Press or to access Manual Adjust.
   The cursor flashes on the fourth digit from the left, as shown on the LCD display.
2. Press to decrease or to increase the value by one digit.
3. Press to save the value and to move the cursor to the next position. Repeat Step 2 and Step 3 until the cursor is on the first digit on the left.
4. Press to save the manually adjusted and to move up one menu level.

5. Press and simultaneously to escape the menu.
   The sensor moves up one menu level at a time and may not save the new setting, depending on the programming procedure.

Entering the Password

If the sensor does not require a password (factory default setting), press from Run mode. The sensor will proceed to QuickSet on the Main menu. If a password is required, follow the steps below:

1. Press from Run mode.
   The sensor waits for the password: 1234. The cursor flashes on the fourth digit from the left. If the password is not entered within 10 seconds, the sensor returns to Run mode.
2. Press four times.
   The sensor inserts the number 4 in the fourth digit location from the left.
3. Press
   The flashing cursor moves to the third digit location from the left.
4. Press three times.
   The sensor inserts the number 3 in the third digit location from the left.
5. Press
   The flashing cursor moves to the second digit location from the left.
6. Press two times.
   The sensor inserts the number 2 in the second digit location from the left.
7. Press
   The flashing cursor moves to the first digit location on the left.
8. Press one time.
   The sensor displays PASSWORD 1234 and the message PASSWORD OK!.
9. Press to save the password.
   The sensor proceeds to QuickSet on the Main menu.

Accessing QuickSet

Teach the current conditions to output Q1 and output Q2 with QuickSet. To locate and access Quickset, follow the steps below:

1. Press or to scroll through the Main menu: QuickSet, TEACH-IN, OFFSET, UNIT, SERIAL, RS422, PASSWORD, and FACTORY <PRESET>.
2. When QuickSet is highlighted, press .
   The sensor enters QuickSet.
3. Teach the current condition.
   - Press to teach output Q1.
   - Press to teach output Q2.

   The current measurement value is displayed in the top line of the display. The received signal value is displayed as a bar graph: the more bars, the stronger the received signal. Output Q1 and output Q2 are displayed as either ON or OFF by the status indicator LEDs and by the letter Q, which is capitalized (Output 1 is ON) or lowercase (Output 1 is OFF).
4. Save or reject the settings.
   - Press to save the setting. The sensor returns to the Main menu.
   - Press Escape to move up one menu level. (Use Escape throughout the Programming mode if needed.)

Teaching and Manually **Adjusting** Discrete Limits

To enter the TEACH-IN menu and to teach discrete limits to the sensor outputs, follow the steps below:

1. Press ↵ to enter the TEACH-IN menu.
   The sensor displays the selected output. TEACH-IN > <SETQ1>.
2. Press ◄ or ► to scroll through the output options: <SETQ1>, <SETQ2>, or <ANALOG> (only for diffuse models).
3. Press ↵ to select an output.
   The sensor displays the current output and mode selections.
4. Press ◄ or ► to scroll through Output 1 options: Mode Q1, TEACH 1.1, TEACH 1.2, HYST 1.
   The sensor displays the TEACH options for the selected output.
5. Press ↵ to view the output mode options.
   The sensor displays an arrow to indicate that the options can be viewed.
6. Press ◄ or ► to scroll through the output mode options.
7. Press ↵ to select an output mode option.
   The sensor saves the selected output mode option.
8. Press ◄ or ► to scroll through Output 1 options: TEACH 1.1, <203>.
   The sensor again displays TEACH options for the selected output.
9. Press ↵ to select an option: TEACH 1.1, 203.
   The sensor is ready to learn Limit 1.
10. Press ↵ to teach the target condition.
    The sensor saves the Limit 1 setting and returns to the Output 1 menu level.
11. Press ↵ to access Manual Adjust.
12. Press ◄ to decrease or ► to increase the value of each digit.
    The flashing cursor indicates the digit is active, starting with the fourth digit location from the left.
13. Press ↵ to select the digit and move it to the left by one digit location.
14. Press ↵ when the cursor flashes on the first digit on the left and the value is correct.
    The sensor saves the setting and returns to the Output 1 menu level.
15. Press ↵ to teach the Limit 1.2 from the Output 1 menu. TEACH 1.2 > <12000>.
    The sensor again displays the TEACH options for the selected output. Repeat the procedure for Limit 1.1.
16. Press ↵ to select the Hysteresis function.HYST 1 > <±005> .
    The flashing cursor indicates that the digit is active, starting with the fourth digit location from the left. The minimum factory default setting for hysteresis is ± 005. The maximum setting for hysteresis is ± 254 mm (± 9.99 in).
17. Press ◄ to decrease and ► to increase the value of each digit.
18. Press ↵ to select the digit and move it to the left by one digit location.
19. Press ↵ when the cursor is on the first digit on the left and the value is correct.
    - HYST 1 > <±254> if the value is valid.
    - HYST 1 > Limited! if the value is outside accepted limits.

    The sensor saves the setting and returns to the HYST 1 menu level.
20. Press ◄ or ► to return to other Output 1 functions or press Escape to move up one menu level.

The TEACH procedure for Output 1 and Output 2 is the same. If the value is outside accepted limits, the sensor does not save the new setting.

Teaching Analog Output Limits

The procedure for teaching analog output limits and discrete output limits is the same, except that the analog output has no hysteresis. The analog output has one unique function: the discrete output limits Q1.1 and Q1.2 can be copied. To copy the discrete output limits to the analog output, follow the steps below:

1. Press and or and to scroll to TEACH-IN > <ANALOG>.
   The sensor is ready to learn the analog output limits. The procedure is identical to the one for teaching discrete output limits, except for the Copy and Paste function.
2. Press or to copy and paste Q to A. COPY Q->A > <ENTER> .
   The sensor is ready to copy the discrete output limits to the analog output.
3. Press to view the options.
4. Press and to scroll between options.
5. Press to select an option.
   - COPY Q->A > ->Q1 & Q2 .
   - COPY Q->A > ->Q2 & Q1.
   - <300 mm

   The selected option, in combination with the selected mode, determines the analog output slope.
   - For Mode 1 (positive slope): Q1 & Q2 – Limit Q1.1 becomes A1 (4 mA); Q2.1 becomes A2 (20 mA) Q2 & Q1 – Limit Q1.1 becomes A2 (20 mA); Q2.1 becomes A1 (4 mA)
   - For Mode 2 (negative slope): The above is reversed. If discrete limits are not at least 300 mm apart, the display will show < 300 mm. The sensor will not perform the copy function.

Accessing the **Offset** Menu

To access the OFFSET < 0 > menu, to save the current offset value[3] (sensing distance), or to adjust it, follow the steps below:

1. Press to access the **Offset** < 0 > menu. OFFSET 0 > OFFSET 426 or OFFSET 0 > OFFSET CLEAR? is displayed.
   OFFSET 0 returns the sensor to the default setting. OFFSET 426 represents a programmed offset value with the current sensing distance expressed in millimeters or one-hundredth of one inch. Select OFFSET CLEAR? when an offset value is displayed that needs to be cleared before a new one can be programmed.
   - To clear an offset value, go to Step 2.
   - To save an offset value, go to Step 3.
   - To adjust an offset value, go to Step 4.
2. Press to clear the offset value: OFFSET CLEARED!.
   The offset value is cleared. The sensor returns to the Main menu.
3. Press to save the current offset value if it is correct.
4. Press and to activate the **Offset** Value Adjustment function: OFFSET 0 > OFFSET 426.
   The cursor flashes on the fourth digit from the left.
5. Press to decrease or to increase the value of each digit: OFFSET - 428 or OFFSET + 428.

   Press or to change the minus symbol in front of the first digit to a plus symbol and vice versa.
6. Press to save the digit and to move the flashing cursor to the left by one digit location.
   The sensor saves each digit, including the + and - symbols.
7. Press when the cursor is on the first digit to the left and the value is correct. OFFSET < -428> or OFFSET < +428>.
   The new offset value is saved. The sensor returns to the Main menu.

[3] The selected offset value applies to all outputs.

8. Press UNIT ->INCH or UNIT->MM.

   Press or to toggle between millimeters and inches.

   The sensor is ready to accept the new setting. Select the distance measurement in millimeters or one- hundredth of one inch. The displayed measurements have no decimals.

9. Press if the correct value is displayed. DIST mm <5392>
   The setting is saved. The sensor returns to the Main menu.

Accessing the Factory Preset Menu

To access the FACTORY <PRESET> menu and to return to Run mode, follow the steps below:

1. Press to access the FACTORY <PRESET> menu: F-PRESET > OK.
   All previous settings are deleted. The sensor returns to the following factory default settings:
   - Teach-In
     - Limit value of measurement range
     - Q1 and Q2 single-switching, normally open, Analog Mode 1
     - Rising slope
   - Offset – 0
   - Unit – mm
   - Serial – RS422
   - Password – OFF
2. Press ESCAPE to leave the default settings intact. FACTORY <PRESET>.

   The sensor returns to the Main menu without changing the default settings.
3. Press to return to the factory default settings. F-PRESET OK! and FACTORY <PRESET>.
   The sensor returns to the Main menu with factory default settings intact.
4. Press ESCAPE to return to Run mode: DIST in 4839.
   The sensor returns to the Main menu with factory default settings intact.

Serial **Communications**

Choose a RS422-compatible, SSI1/10-compatible, or SSI1/8-compatible serial interface connection with Serial Select. Depending on the setting made in Serial Select, the respective interface parameters are displayed or changed. The following settings are possible:

Table 1: RS422-Compatible Serial Interface Connection

Baud rate	4.8, 9.6, 19.2, 38.4 *(factory default)*, or 57.6 KBaud
Data bit	8 or 7 *(factory default)*
Stop bit	1 *(factory default)* or 2
REPEAT mode *(factory default)*	The sensor continuously sends measured data via the serial interface without waiting for a request.
SINGLE mode	A string of measured data is supplied on request.
Parity	Even *(factory default)*, but not shown on LCD menu.

Table 2: SSI1/10-Compatible Serial Interface Connection (factory default)

LSB	0.1 mm (10MIL)
Codes	BINARY24, BINARY24E, and BINARY25; GRAY24, GRAY24E, and GRAY25 *(factory default)*

Table 3: SSI1/8-Compatible Serial Interface Connection

LSB	0.125 mm (8 MIL)
Codes	BINARY24, BINARY24E, and BINARY25; GRAY24, GRAY24E, and GRAY25 *(factory default)*

Serial Response Speed

The sensor recalculates the distance measurement every 12 ms. This is not a moving average. A new average is calculated for the previous 12 ms of data.

With the SSI output, the data can be read every 1.4 ms (possibly the *same* reading for 8 or 9 readings, followed by a change). For the most accurate prediction of the target location, take a sample at the 1.4 ms read-rate of the SSI and determine when the change happens. In the worst case, the data is for the average target location and over the previous 12 ms, plus a 1.4 ms delay. For example, the 12 ms average was changed just after the previous read had started.

RS422 Protocol

RS422 serial interface commands have this structure: <STX><Command><[Data]><EOT>. The sensor responds to the commands in three different ways:

- <NAK>—The command was not recognized or the data is outside the limit values.
- <ACK>—The command was recognized and executed. The command requires no response data.
- <Data>—The command was recognized. The requested data was sent.

Definitions	
STX	Start transmission (hex 02 or CTRL B)
EOT	End of text (hex 04 or CTRL D)
NAK	No acknowledgement (hex 15 or CTRL U)
ACK	Acknowledge (hex 06 or CTRL F)
Command	3-digit command (ASCII text)
[Data]	Whole numbers (ASCII text)

Note: In ASCII text (Command + [Data]), spaces and uppercase/lowercase letters are ignored.

RS422 Cable

The RS422 interface is a reliable, serial interface in full duplex mode with transfer rates up to 10 MBaud. The maximum cable length is 1,000 m (4,000 ft). The shielded cable is connected to the sensor connector and the ground terminal of the control cabinet.

RS422 User Commands and Their Meanings

Command	Data to LT7	Data from LT7	Meaning
GAP		All parameters in text format: LT7 $Revision x.xx$	Get All Parameters (all sensor parameters are displayed): sensor software revision (number)
		Pilot Laser Status	Pilot laser status (ON/OFF/xx seconds ON)
		Serial settings	Serial settings
		Discrete Output Q1 settings Discrete Output Q2 settings	• Discrete output condition: ◦ ON: output high ◦ OFF: output low • Output mode • Limit 1 setting • Limit 2 setting • Hysteresis • Invert status ON/OFF
		Analog Output QA settings	Analog output condition (diffuse sensors only): • Value 0 to 4095 • Limit 1 setting • Limit 2 setting • Invert status ON/OFF
		Output status	Output unit of measure: mm or one- hundredth of one inch (10 MIL)
		Offset status	Offset setting (mm or one-hundredth of one inch)
		Password setting	Password: enabled or disabled
		Error status	Error status

Command	Data to LT7	Data from LT7	Meaning
ECM		ACK	Execute **Continuous** Measurement Set and triggered by the next request for measured values
GDB		Energy value 0 dB to -120 dB	Gain Level Indicates the amount of received energy
GNR		xxxxxxxxxx	Get Serial Number Emitted as ASCII text (maximum 24 characters)
GSI		Bit 7: transmitter faulty Bit 6: receiver blinded or faulty Bit 5: temperature warning T < -10 °C or T > +70 °C Bit 4: target out of range or transmitter faulty Bit 3: temperature error T > +85 °C Bit 2: supply voltage too low Bit 1: PLL unlocked Bit 0: not used	Get Error Status 0: no error 1: error
GTE		±xxx	Get Temperature Internal temperature in °C
GVE		LT7 $Revision x.xx$	Get Version Software version is displayed
GCM		All available commands	Help Command/Get Commands All available commands are displayed in text format
ICM	0,1	ACK	Input **Continuous** Measurement Mode 0: continuous measurement output 1: output of single measurement values
IDO	Input desired value	ACK	Input **Offset Setting** (All Outputs) Up to 12000 mm (plus or minus) or 48000 in (plus or minus)[4]
IVL	0,1	ACK	Enable Visible Laser 0: pilot laser OFF 1: pilot laser ON
ISB	0,1	ACK	Input Stand-by 0: operation 1: stand-by
ESM		<meas. value>	Trigger/Execute Single Measurement Request for measured value with single measurement output
EPW		ACK	Write Parameter Page/Execute Parameter Write Parameters are stored

Discrete Output Q1 Commands and Their Meaning

Command	Data to LT7	Data from LT7	Meaning *
IH1	000.. 254 or 000.. 999	ACK	Set Discrete Q1 Hysteresis 0 mm to 254 mm or 0 in to 9.99 in
IL1	Input desired limit value (not including Offset)	ACK	Input Discrete Q1 Limit 1 0 mm to 12000 mm or 0 in to 480.00 in Selected Offset value is applied to this limit
IL4	Input desired limit value (not including Offset)	ACK	Input Discrete Q1 Limit 2 0 mm to 12000 mm or 0 in to 480.00 in Selected Offset value is applied to this limit

[4] Do not insert a period or comma. For example 12,000 mm is 12000 mm; 480.00 in is 48000.

Command	Data to LT7	Data from LT7	Meaning *
IM1	0, 1, 2	ACK	Discrete Output Q1 Mode 0: inactive 1: 1 switching point 2: 2 switching points
IN1	0, 1	ACK	Invert Discrete Output Q1 0: Q 1: Q inverted

* Do not insert a period or comma. For example 12,000 mm is 12000 mm; 480.00 in is 48000.

Discrete Output Q2 Commands and Their Meaning

Command	Data to LT7	Data from LT7	Meaning*
IH2	000.. 254 or 000.. 999	ACK	Set Discrete Q2 Hysteresis 0 mm to 254 mm or 0 in to 9.99 in
IL2	Input desired limit value (not including Offset)	ACK	Input Discrete Q2 Limit 1 0 mm to 12000 mm or 0 in to 480.00 in Selected Offset value is applied to this limit
IL5	Input desired limit value (not including Offset)	ACK	Input Discrete Q2 Limit 2 0 mm to 12000 mm or 0 in to 480.00 in Selected Offset value is applied to this limit
IM2	0, 1, 2	ACK	Discrete Output Q2 Mode 0: inactive 1: 1 switching point 2: 2 switching points
IN2	0, 1	ACK	Invert Discrete Output Q2 0: Q 1: Q inverted

* Do not insert a period or comma. For example 12,000 mm is 12000 mm; 480.00 in is 48000.

Analog Output QA Commands and Their Meaning

Only for diffuse sensor models. Do not insert a period or comma. For example 12,000 mm is 12000 mm; 480.00 in is 48000.

Command	Data to LT7	Data from LT7	Meaning
IL3	Input desired limit value (not including Offset)	ACK	Input Analog QA Limit 1 0 mm to 12,000 mm or 0 in to 480.00 in Selected Offset value is applied to this limit
IL6	Input desired limit value (not including Offset)	ACK	Input Analog QA Limit 2 0 mm to 12,000 mm or 0 in to 480.00 in Selected Offset value is applied to this limit
INA	0, 1	ACK	Invert Analog Output QA 0: Q 1: Q inverted

SSI-Compatible Interface

With SSI-compatible data transmission, data updates in synchronization with the readout cycle. The data is as up-to-date as the time interval between two readouts. An intermittent readout is recommended. After a longer readout interval, the data contents of the first readout can be out-of-date and should be ignored.

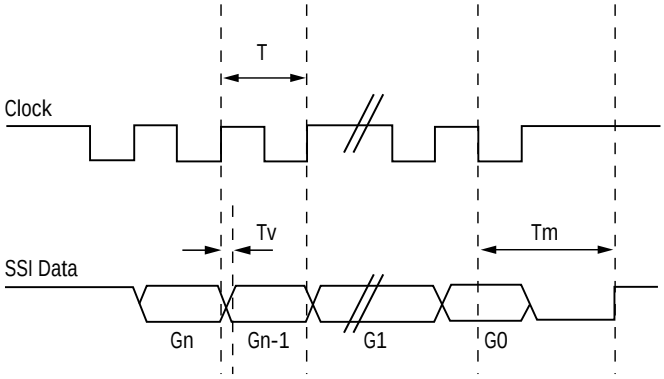

T	Duration of clock signal: minimum 2 µSec = 500 kHz; maximum 13 µSec = 77 kHz
Tv	Delay time maximum 360 ns
Tm	Minimum time between last rising edge and reloading of SSI, approximately 24 µSec
Gn	MSB (here Gray Code)
24-bit Transmission	G1 = second LSB; G0 = LSB
24+E Transmission	G1 = LSB; G0 = error bit
25-bit Transmission	G1 = second LSB, G0 = LSB

Figure 8. SSI-compatible interface timing

SSI Cable

The maximum baud rate for reliable data transmission depends on the cable length. The shielded connection cable is connected to the sensor connector and the ground terminal of the control cabinet.

Cable Lengths					
Cable Length	< 25 m	< 50 m	< 100 m	< 200 m	< 400 m
Baud Rate	< 500 kHz	< 400 kHz	< 300 kHz	< 200 kHz	< 100 kHz

Troubleshooting and Error Codes

When an error occurs, the error output Qs or Qp is set. The LCD displays an error message.

Multiple errors may exist simultaneously. In this case, both Qs and Qp are set. The LCD displays the respective error messages. The error status is requested via the RS422 GSI command. For example, a voltage that is too low causes a counter error. As a result, the GSI command reports 00000110.

Error Message	Error Output (**Active** Low)		Bit Response Sequence	Meaning
	Qs	Qp		
BLINDING	Active		01000000	Internal error or ambient light too strong.
LAS. ERR.	Active	Active	10000000	Measurement laser faulty: repair or replace sensor.
LOW VOLT	Active	Active	00000100	Voltage too low or error in measurement of supply voltage.
NO VALUE			00000000	First measurement after switching on: sensor not ready. The message disappears automatically after 300 ms when the sensor is ready.
PLL UNLOCKED	Active	Active	00000010	Counter error: repair or replace sensor.
	Active		00100000	Temperature is out of acceptable range (below –10 °C or above +70 °C).
OVERTEMP	Active (Laser OFF)	Active (Laser Off)	00101000	Operating temperature is too high (above +85 °C inside the housing). The measurement laser switches off. Turn the sensor off. The sensor may operate again after a cool-down period.
DIST (mm) > Maximum		Active	00010000	No target in range or misaligned sensor.

CAUTION: Do Not Disassemble for Repair

This device contains no user-serviceable components. Do not attempt to disassemble for repair. A defective unit must be returned to the manufacturer.

Specifications

Supply Voltage
18 V dc to 30 V dc (10% maximum ripple)

Power **Consumption**
Less than 4.5 W at 25 °C

Sensing Range—LT7PLVQ
0.5 m to 250 m (using the specified reflector)

Sensing Range—LT7PIDQ
6% Black card: 0.5 m to 3 m
18% Gray card: 0.5 m to 7 m
90% White card: 0.5 m to 10 m

Supply **Protection** Circuitry
Protected against reverse polarity and transient overvoltages

Measuring Laser
Infrared Class 1 laser, 900 nm

Laser Control
Measurement laser is on when sensor is on. Pilot laser enabled during Programming mode; alternates with measurement laser

Spot Size
Sensing Beam on page 2

Pilot Laser
Visible red Class 2 laser, 650 nm

Protection of Discrete Output and Analog Output
Protected against continuous overload and short circuit

Discrete Outputs
(2) 100 mA, PNP

Discrete Switch Points
Adjustable in steps of 1 mm

Discrete Output Hysteresis
Adjustable, minimum 10 mm

Alarm Outputs
50 mA, PNP (N.O.)

Analog Output LT7PLVQ
Not applicable

Analog Output LT7PIDQ
4 mA to 20 mA

Maximum Cable Length
100 m

Output Response Time
12 ms

Linearity
± 10 mm

Resolution/Repeatability
LT7PLVQ: ± 2 mm
LT7PIDQ: ± 4 mm

Color **Sensitivity** LT7PLVQ **(diffuse** models)
Not applicable

Color **Sensitivity** LT7PIDQ
Contact Banner Engineering Corp.

Temperature **Effect**
< ± 5 mm over the total sensing range

Minimum Analog Window Size LT7PLVQ
Not applicable

Minimum Analog Window Size LT7PIDQ
300 mm

Adjustments
Password via programming buttons: Enable/Disable, Measurement Unit Select, Offset Value Select, Output Limits Set, Output Mode Select, Analog Output Slope Select (diffuse models only), and Output Limit Manual Adjust

Serial Interface
RS422- or SSI-compatible

Serial Measurement Speed
RS422: 2.9 ms at 57.6 kBaud
SSI: 1.4 ms (SSI cycle 80 µs)

Indicators
Green Power ON/OFF
Red Alarm (Error) LED
Orange Output 1 and Output 2 conducting LEDs, 2-line digital LCD

Construction
ABS shock-resistant housing; PMMA window; polycarbonate displays

Dimensions
93 mm x 93 mm x 42 mm

Weight
Approximately 230 g

Application Note
All specifications are based on the specified surface at constant ambient conditions and after a minimum 15-minute operating time. To avoid crosstalk, laser spots must be separated by at least 200 mm.

Connections
12-pin M16 connector; 100 m (330 ft) maximum cable length

Environmental **Rating**
IEC IP67

Operating Conditions
–10 °C to +50 °C (+14 °F to +122 °F) during continuous operation

Storage Temperature
–30 °C to +75 °C (–22 °F to +167 °F)

Vibration/Shock
EN 60947-5-2

Certifications
CE

Dimensions

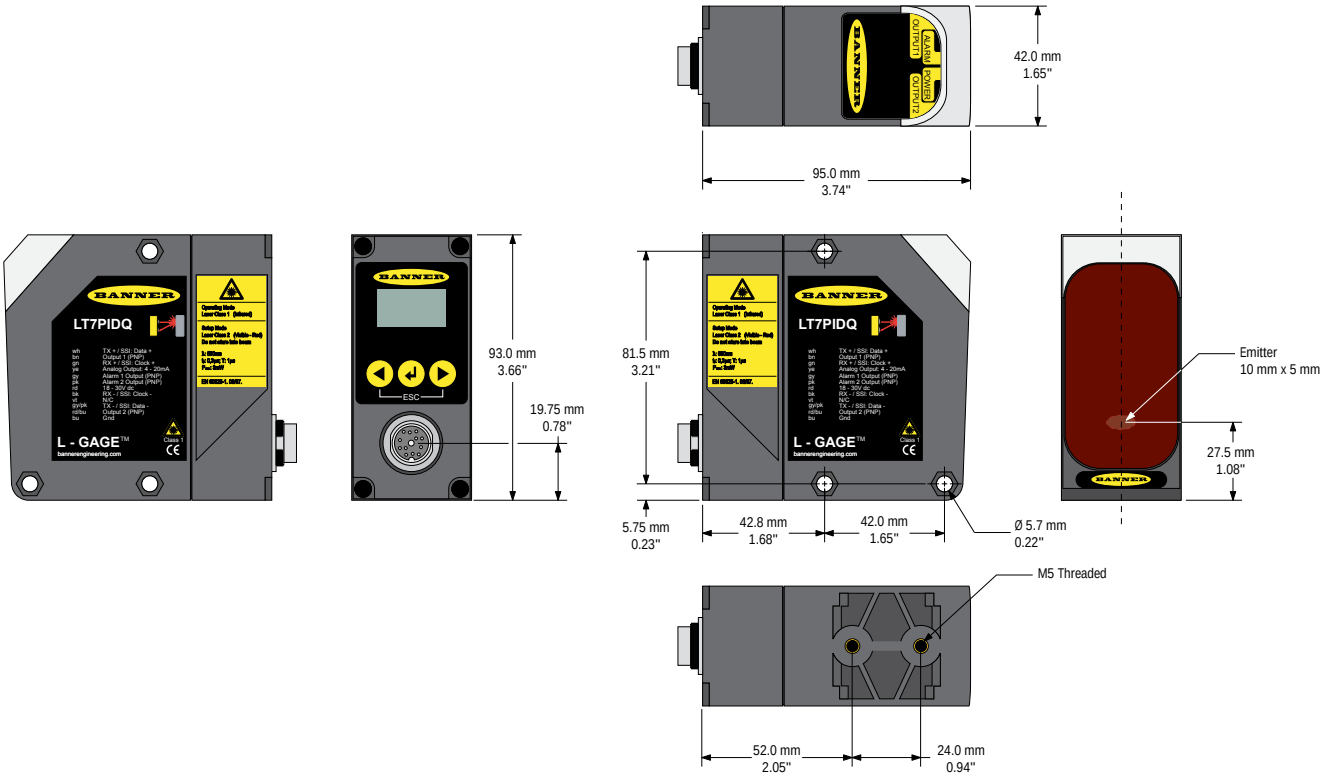

All measurements are listed in millimeters [inches], unless noted otherwise.

Accessories

Accessories

12-Pin M16 Cordsets				
Model	Length	Style	Dimensions (mm)	Pinout (Female)
MQDC-1210ST	3.05 m (10 ft)	Straight		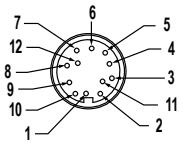 1 = White 2 = Brown 3 = Green 4 = Yellow 5 = Gray 6 = Pink 7 = Red 8 = Black 9 = Violet 10 = Gray/Pink 11 = Red/Blue 12 = Blue
MQDC-1230ST	9.14 m (30 ft)			
MQDC-1280ST	24.4 m (80 ft)			
MQDC-1210RA	3.05 m (10 ft)	Right-angle		
MQDC-1230RA	9.14 m (30 ft)			

Mounting Brackets

SMBLT7

- Right-angle bracket
- 300 series stainless steel
- Fine-adjust accessory SMBLT7F sold separately

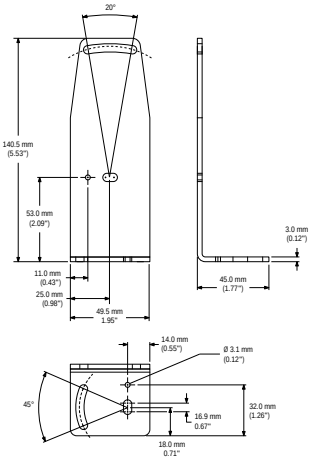

SMBLT7F

- Fine-adjust accessory for model SMBLT7 bracket (SMBLT7 bracket sold separately)
- 304 series stainless steel
- Mounting hardware included

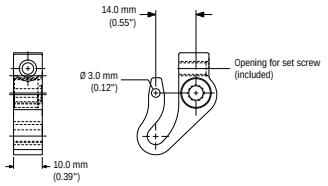

Retroreflectors

BRT-250, BRT-540, BRT-700

- Square reflector with rigid aluminum backing for use with LT7
- Temperature: –20 °C to +50 °C (–4 °F to +122 °F)
- Approximate size: BRT-250: 250 mm × 250 mm; BRT-540: 540 mm × 540 mm; BRT-700: 700 mm × 700 mm

Retroreflective Tape

Model	**Reflectivity** Factor	Maximum Temperature	Size
BRT-TVHG-8X10P	0.8	+60 °C (+140 °F)	203 × 254 mm

Retroreflective material has a pressure-sensitive adhesive. For maximum adhesion, surfaces must be clean and dry before applying. For best results, use full-size; target may be trimmed as necessary.

Alignment Aid

Alignment Aid	Model	**Description**
	LAT-2	Clip-on attachment for the sensor that allows the laser spot to be clearly seen at distances greater than 50 m.

Banner Engineering Corp. Limited Warranty

Banner Engineering Corp. warrants its products to be free from defects in material and workmanship for one year following the date of shipment. Banner Engineering Corp. will repair or replace, free of charge, any product of its manufacture which, at the time it is returned to the factory, is found to have been defective during the warranty period. This warranty does not cover damage or liability for misuse, abuse, or the improper application or installation of the Banner product.

THIS LIMITED WARRANTY IS EXCLUSIVE AND IN LIEU OF ALL OTHER WARRANTIES WHETHER EXPRESS OR IMPLIED (INCLUDING, WITHOUT LIMITATION, ANY WARRANTY OF MERCHANTABILITY OR FITNESS FOR A PARTICULAR PURPOSE), AND WHETHER ARISING UNDER COURSE OF PERFORMANCE, COURSE OF DEALING OR TRADE USAGE.

This Warranty is exclusive and limited to repair or, at the discretion of Banner Engineering Corp., replacement. IN NO EVENT SHALL BANNER ENGINEERING CORP. BE LIABLE TO BUYER OR ANY OTHER PERSON OR ENTITY FOR ANY EXTRA COSTS, EXPENSES, LOSSES, LOSS OF PROFITS, OR ANY INCIDENTAL, CONSEQUENTIAL OR SPECIAL DAMAGES RESULTING FROM ANY PRODUCT DEFECT OR FROM THE USE OR INABILITY TO USE THE PRODUCT, WHETHER ARISING IN CONTRACT OR WARRANTY, STATUTE, TORT, STRICT LIABILITY, NEGLIGENCE, OR OTHERWISE.

Banner Engineering Corp. reserves the right to change, modify or improve the design of the product without assuming any obligations or liabilities relating to any product previously manufactured by Banner Engineering Corp. Any misuse, abuse, or improper application or installation of this product or use of the product for personal protection applications when the product is identified as not intended for such purposes will void the product warranty. Any modifications to this product without prior express approval by Banner Engineering Corp will void the product warranties. All specifications published in this document are subject to change; Banner reserves the right to modify product specifications or update documentation at any time. Specifications and product information in English supersede that which is provided in any other language. For the most recent version of any documentation, refer to: *www.bannerengineering.com*.

© Banner Engineering Corp. All rights reserved