BANNER

Sensing • Detecting • Automation Expert

BES58-10 EQ Series Incremental Rotary Encoder

Housing Ø58 mm, solid shaft Incremental rotary encoder

Features

- Industrial standard housing Ø58 mm, solid shaft Ø10 mm
- Up to 2000 P/R
- Wide Variation of Outputs:NPN, Push-pull, Line-driver
- Protection degree :IP54
- 12-pin Connector

Order Code

Series	Solid Shaft	Housing Diameter		Shaft Diameter	Exit Position	Supply Voltage, Output Type		Pulse Count	Connection Type
BE	S	58	–	10	S		–		EQ

6N:DC 10-30V,NPN Open collector output
6H:DC 10-30V,Push-Pull output
6T:DC 10-30V,6 signals HTL output
72T: DC 5V,6 signals TTL output
6R: DC 10-30V,6 signals TTL output

100, 120, 150, 200, 250, 300, 360, 400, 500, 512, 600, 720, 800, 1000, 1024, 1200, 1500, 2000

Type EQ12
12-pin Connector

Electrical Specifications

Pulse Count (ppr)	Max. 2000				
Type	6N	6H	6T	72T	6R
Output Type	NPN Open collector	Push-Pull	HTL	TTL	TTL
Supply Voltage	10-30Vdc	10-30Vdc	10-30Vdc	5Vdc	10-30Vdc
No-Load Supply Current	Max.80mA	Max.80mA	Max.150mA	Max.150mA	Max.150mA
Output Frequency	Max.100KHz	Max.100KHz	Max.100KHz	Max.100KHz	Max.100KHz
Rise Time	1 μ s	1 μ s	100ns	100ns	100ns
Operating Current	Max. per channel 30mA	Max. per channel 30mA	Max. per channel 20mA	Max. per channel 20mA	Max. per channel 20mA

Output Type

6T/72T/6R

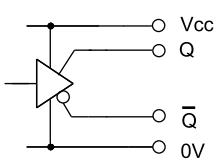

6H

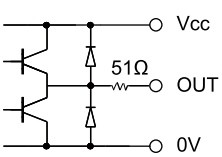

6N

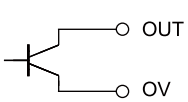

P/N 153266

ПРОМЭЛЕКТРОНИКА/ sales@prom-elec.com

Mechanical Specifications

Rotational Speed		6000r/min
Shaft Load	**Axial**	40N
	Radial	20N
Mass		Approx. 0.3kg
Environmental Rating		IP54
Starting Torque		5X10^{-3}N.m
Operating Temperature		-10°C ~ +70°C
Storage Temperature		-20°C ~ +80°C
Shock Resistance		1000m/s^2, 6ms
Vibration Resistance		100m/s^2, 10~200Hz
Connector		Type EQ12. 12-pin
Housing		Powder-coated Aluminum
Shaft		Stainless Steel

Signal Outputs

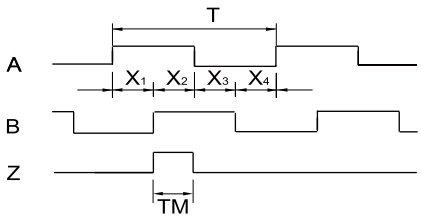

P cw - with view onto the shaft

- Wave Ratio $X_1+X_2=0.5T \pm 0.1T$, $X_2+X_3=0.5T \pm 0.1T$
- Phase shift $Xn>0.15T(n=1,2,3,4)$

- Zero signal width *TM=0.25T ± 0.1T
- T=360/N(N:The rotation of the shaft output number of pulses)

* When pulse count ≥ 2000P/R
Zero signal width TM=0.5T ± 0.15T

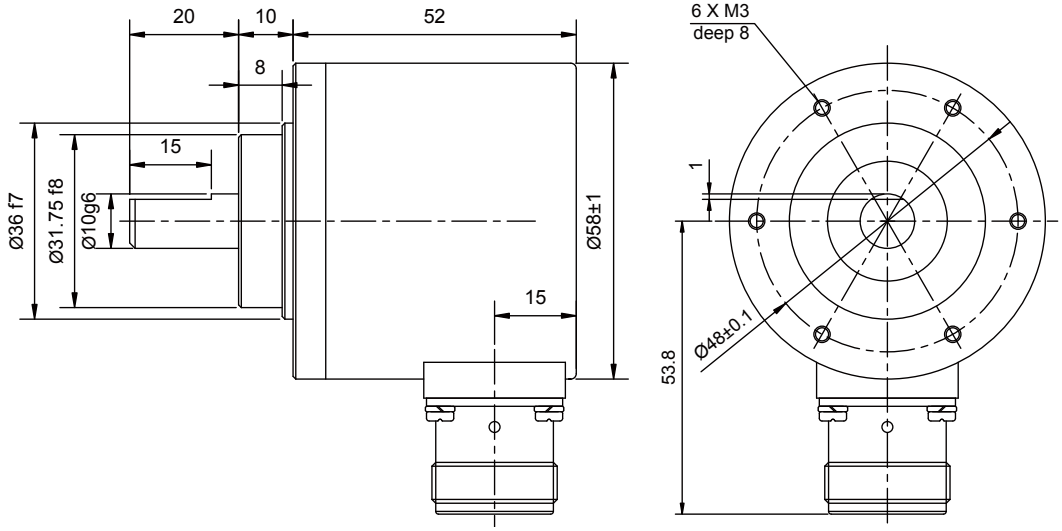

Electrical Connection

12-pin Connector	Color of Lead Wire	6T / 72T / 6R	6H / 6N
2	Red	Vcc	Vcc
1	Black	0V	0V
3	Green	A	A
6	Pink	$\overline{A}$	-
4	Yellow	B	B
7	Blue	$\overline{B}$	-
5	White	Z	Z
8	Orange	$\overline{Z}$	-
Screen	Screen	G	G