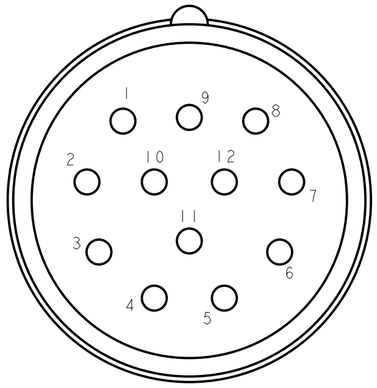

VIEW FROM FRONT(FEMALE)
SCALE 4:1

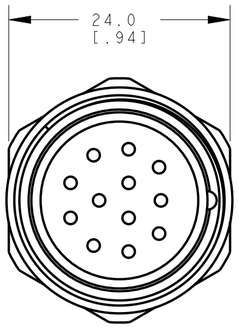

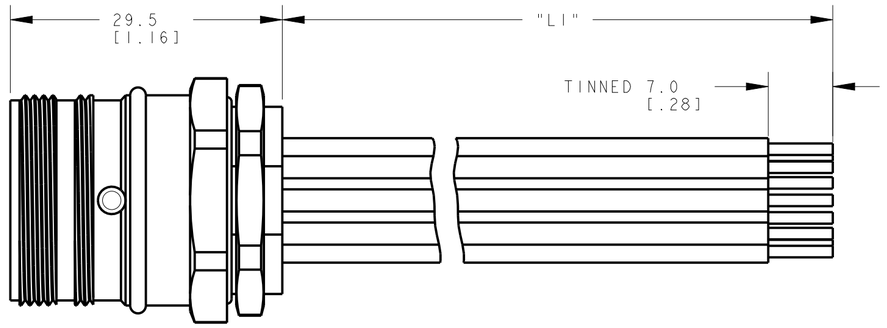

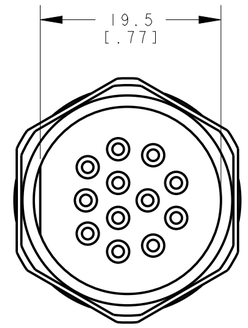

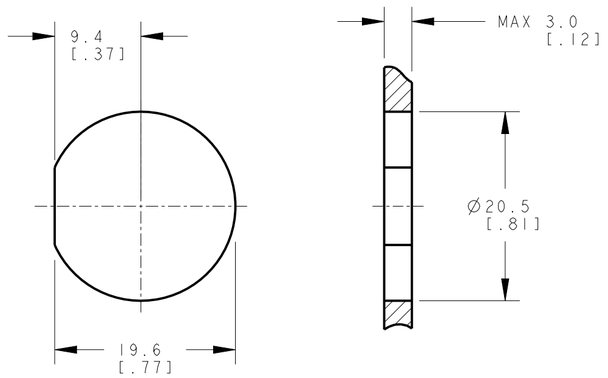

RECOMMENDED PANEL CUT-OUT

CONNECTOR PIN-OUT			
PIN	WIRE COLOR	PIN	WIRE COLOR
1	WHITE	7	BLUE
2	BROWN	8	RED
3	GREEN	9	ORANGE
4	YELLOW	10	TYRIAN PURPLE
5	GREY	11	BLACK
6	PINK	12	VIOLET

NOTES:
1. ALL DIMENSIONS ARE MILLIMETERS [INCHES] UNLESS OTHERWISE NOTED.
2. REFER TO "www.bannerengineering.com" FOR ADDITIONAL DATA AND SPECIFICATIONS.

This drawing is the property of BANNER ENGINEERING CORP. Any use or reproduction, in any form, without prior written permission of Banner is prohibited.
© 2015 Banner Engineering Corp.

THIRD ANGLE PROJECTION

BANNER ENGINEERING CORP.
www.bannerengineering.com

TITLE
BR-M23F12F13-X

SIZE	DRAWING NO.	REV.
C	242016	A
SCALE 2:1	SHEET 1 OF 1	

CREO

ПРОМЭЛЕКТРОНИКА/ sales@prom-elec.com