Features

Self-contained, AC-operated sensors



This guide is designed to help you set up and install the Q40 Series Sensor. For complete information on programming, performance, troubleshooting, dimensions, and accessories, please refer to the Product Manual at www.bannerengineering.com. Search for part number 121515 to view the Product Manual. Use of this document assumes familiarity with pertinent industry standards and practices.

WARNING:

- **Do not use this device for personnel protection**
- Using this device for personnel protection could result in serious injury or death.
- This device does not include the self-checking redundant circuitry necessary to allow its use in personnel safety applications. A device failure or malfunction can cause either an energized (on) or de-energized (off) output condition.

Models

Opposed mode models

Model	Range	Output	Connection
Q403E	60 m (200 ft)	-	2 m (6.5 ft) cable
Q403EQ1			4-pin 1/2 in-20UNF (1/2-in Dual Key) male quick disconnect
Q40AW3R		LO	2 m (6.5 ft) cable
Q40AW3RQ1		LO	4-pin 1/2 in-20UNF (1/2-in Dual Key) male quick disconnect
Q40RW3R		DO	2 m (6.5 ft) cable
Q40RW3RQ1		DO	4-pin 1/2 in-20UNF (1/2-in Dual Key) male quick disconnect

Polarized retroreflective mode models

Model	Range	Output	Connection
Q40AW3LP	6 m (20 ft)	LO	2 m (6.5 ft) cable
Q40AW3LPQ1		LO	4-pin 1/2 in-20UNF (1/2-in Dual Key) male quick disconnect
Q40RW3LP		DO	2 m (6.5 ft) cable
Q40RW3LPQ1		DO	4-pin 1/2 in-20UNF (1/2-in Dual Key) male quick disconnect
Q40RW3LPQ3		DO	5-pin M12 male quick disconnect

Fixed-field mode models

Model	Range	Output	Connection
Q40AW3FF200	200 mm (8 in) cutoff	LO	2 m (6.5 ft) cable
Q40AW3FF200Q1		LO	4-pin 1/2 in-20UNF (1/2-in Dual Key) male quick disconnect
Q40RW3FF200Q1		DO	4-pin 1/2 in-20UNF (1/2-in Dual Key) male quick disconnect
Q40AW3FF400	400 mm (16 in) cutoff	LO	2 m (6.5 ft) cable
Q40AW3FF400Q1		LO	4-pin 1/2 in-20UNF (1/2-in Dual Key) male quick disconnect
Q40AW3FF400Q4		LO	
Q40RW3FF400		DO	2 m (6.5 ft) cable
Q40RW3FF400Q1		DO	4-pin 1/2 in-20UNF (1/2-in Dual Key) male quick disconnect

Continued on page 2

Original Instructions
13-May-26

© Banner Engineering Corp. All rights reserved.
www.bannerengineering.com

116168
p/n: 116168 Rev C

ПРОМЭЛЕКТРОНИКА/ sales@prom-elec.com

Continued from page 1

Model	Range	Output	Connection
Q40AW3FF600	600 mm (24 in) cutoff	LO	2 m (6.5 ft) cable
Q40AW3FF600 W/30		LO	9 m cable
Q40AW3FF600Q1		LO	4-pin 1/2 in-20UNF (1/2-in Dual Key) male quick disconnect
Q40RW3FF600		DO	2 m (6.5 ft) cable
Q40RW3FF600Q1		DO	4-pin 1/2 in-20UNF (1/2-in Dual Key) 2 male quick disconnect

A model with a QD connector requires a mating cable.

Wiring

Cabled emitters

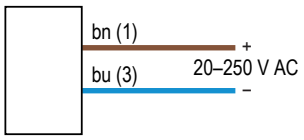

All other cabled models

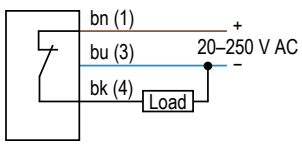

Key
1 = Brown
3 = Blue
4 = Black

QD Emitters (4-pin 1/2 in-20UNF (1/2-in Dual Key))

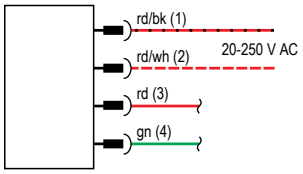

All Other QD Models (4-pin 1/2 in-20UNF (1/2-in Dual Key))

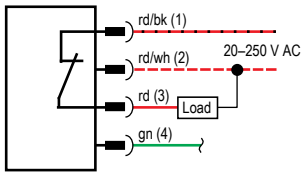

4-pin 1/2 in-20UNF (1/2-in Dual Key) male pinout

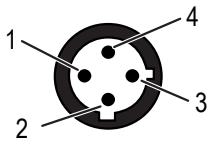

Key
1 = Red/Black
2 = Red/White
3 = Red
4 = Green

Specifications

Supply Voltage and Current

20 V AC to 250 V AC (50/60 Hz).

Average current: 20 mA

Peak current: 200 mA at 20 V AC, 500 mA at 120 V AC, 750 mA at 250 V AC

Supply Protection Circuitry

Protected against transient voltages

Output Configuration

SPST solid-state ac switch; Three-wire hookup; Choose light operate or dark operate models

Light Operate: N.O. output conducts when the sensor sees its own (or the emitter's) modulated light

Dark Operate: Output conducts when the sensor sees dark

Sensing Beam

Opposed mode models: Infrared, 950 nm

Polarized retroreflective mode models: Visible red, 680 nm

Fixed-field mode models: Infrared, 880 nm

Output Rating

300 mA maximum (continuous)

Fixed-Field models: derate 5 mA/°C above +50°C (122°F)

Inrush Capability: 1 amp for 20 milliseconds, non-repetitive

OFF-state leakage current: < 100 microamps

ON-state saturation voltage: 3 V at 300 mA ac; 2 V at 15 mA ac

Output Response Time

Opposed mode: 16 milliseconds ON, 8 milliseconds OFF

Other models: 16 milliseconds ON and OFF

NOTE: 100 ms delay on power-up

Repeatability

Opposed mode: 2 milliseconds

Other modes: 4 milliseconds

Repeatability and response are independent of signal strength

Indicators

Two LEDs (Green and Amber)

Green ON: power to the sensor is ON

Amber ON: sensor sees light

Amber flashing: excess gain marginal (1 to 1.5x) in light conditions

Connections

2 m (6.5 ft) cable, 9 m (30 ft) cable, or 4-pin 1/2 in-20UNF (1/2-in Dual Key) quick-disconnect fitting, depending on the model

Construction

PBT polyester housing; polycarbonate (opposed mode) or acrylic lens

© Banner Engineering Corp. All rights reserved.
www.bannerengineering.com

Environmental Rating

Leakproof design rated NEMA 6P, DIN 40050 (IP69K per ISO 20653)

Operating Conditions

Temperature: –40 °C to +70 °C (–40 °F to +158 °F)

90% at +50 °C maximum relative humidity (non-condensing)

Vibration and Mechanical Shock

All models meet MIL-STD-202F, Method 201A (Vibration: 10 Hz to 60 Hz maximum, 0.06 inch (1.52 mm) double amplitude, 10G acceleration) requirements. Method 213B conditions H&I. Shock: 75G with device operating; 100G for non-operation

Certifications

Banner Engineering BV
Park Lane, Culliganlaan 2F bus 3
1831 Diegem, BELGIUM

Turck Banner LTD Blenheim House
Blenheim Court
Wickford, Essex SS11 8YT
GREAT BRITAIN

Required Overcurrent Protection

WARNING: Electrical connections must be made by qualified personnel in accordance with local and national electrical codes and regulations.

Overcurrent protection is required to be provided by end product application per the supplied table.

Overcurrent protection may be provided with external fusing or via Current Limiting, Class 2 Power Supply.

Supply wiring leads < 24 AWG shall not be spliced.

For additional product support, go to www.bannerengineering.com.

Supply Wiring (AWG)	Required Overcurrent Protection (A)	Supply Wiring (AWG)	Required Overcurrent Protection (A)
20	5.0	26	1.0
22	3.0	28	0.8
24	2.0	30	0.5

Dimensions

Cabled models

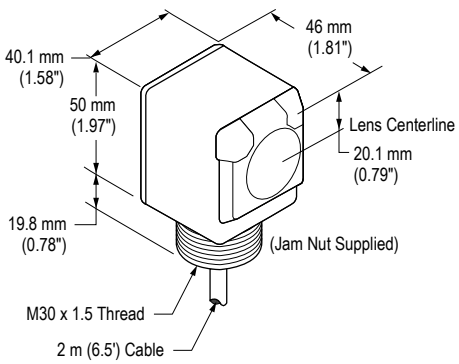

QD models

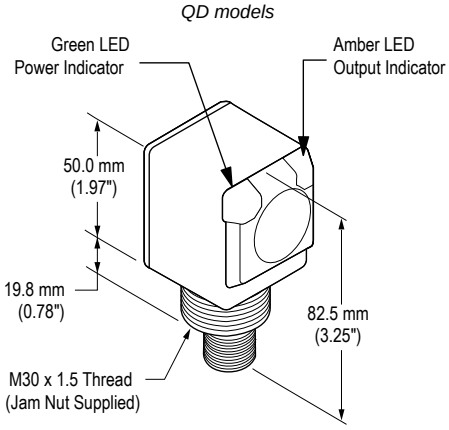

All measurements are listed in millimeters [inches], unless noted otherwise. The measurements provided are subject to change.

© Banner Engineering Corp. All rights reserved.
www.bannerengineering.com

Accessories

Quick-Disconnect (QD) Cables

4-Pin Single-Ended 1/2-in Dual Key Female Cordsets				
Model	**Length**	**Style**	**Dimensions**	**Pinout (Female)**
MQAC-406	2 m (6.56 ft)	Straight	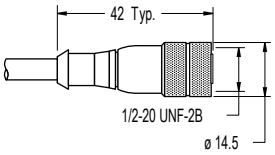	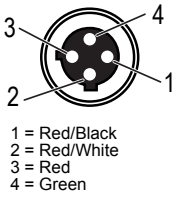 1 = Red/Black 2 = Red/White 3 = Red 4 = Green
MQAC-415	5 m (16.4 ft)			
MQAC-430	9.14 m (30 ft)			
MQAC-406RA	1.83 m (6 ft)	Right-Angle	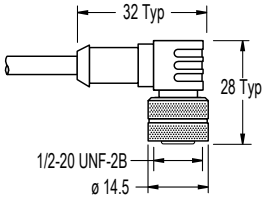	
MQAC-415RA	5 m (16.4 ft)			
MQAC-430RA	9.14 m (30 ft)			

Banner Engineering Corp Limited Warranty

Banner Engineering Corp. warrants its products to be free from defects in material and workmanship for one year following the date of shipment. Banner Engineering Corp. will repair or replace, free of charge, any product of its manufacture which, at the time it is returned to the factory, is found to have been defective during the warranty period. This warranty does not cover damage or liability for misuse, abuse, or the improper application or installation of the Banner product.

THIS LIMITED WARRANTY IS EXCLUSIVE AND IN LIEU OF ALL OTHER WARRANTIES WHETHER EXPRESS OR IMPLIED (INCLUDING, WITHOUT LIMITATION, ANY WARRANTY OF MERCHANTABILITY OR FITNESS FOR A PARTICULAR PURPOSE), AND WHETHER ARISING UNDER COURSE OF PERFORMANCE, COURSE OF DEALING OR TRADE USAGE.

This Warranty is exclusive and limited to repair or, at the discretion of Banner Engineering Corp., replacement. **IN NO EVENT SHALL BANNER ENGINEERING CORP. BE LIABLE TO BUYER OR ANY OTHER PERSON OR ENTITY FOR ANY EXTRA COSTS, EXPENSES, LOSSES, LOSS OF PROFITS, OR ANY INCIDENTAL, CONSEQUENTIAL OR SPECIAL DAMAGES RESULTING FROM ANY PRODUCT DEFECT OR FROM THE USE OR INABILITY TO USE THE PRODUCT, WHETHER ARISING IN CONTRACT OR WARRANTY, STATUTE, TORT, STRICT LIABILITY, NEGLIGENCE, OR OTHERWISE.**

Banner Engineering Corp. reserves the right to change, modify or improve the design of the product without assuming any obligations or liabilities relating to any product previously manufactured by Banner Engineering Corp. Any misuse, abuse, or improper application or installation of this product or use of the product for personal protection applications when the product is identified as not intended for such purposes will void the product warranty. Any modifications to this product without prior express approval by Banner Engineering Corp will void the product warranties. All specifications published in this document are subject to change; Banner reserves the right to modify product specifications or update documentation at any time. Specifications and product information in English supersede that which is provided in any other language. For the most recent version of any documentation, refer to: www.bannerengineering.com.

For patent information, see www.bannerengineering.com/patents.

© Banner Engineering Corp. All rights reserved.
www.bannerengineering.com