# MULTI-BEAM® 3- and 4-Wire Retroreflective Mode Scanner Blocks

## Datasheet

3- and 4-wire retroreflective mode scanner blocks for MULTI-BEAM® Modular Photoelectric Sensors

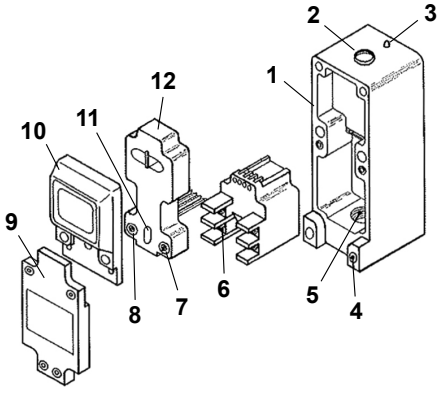


1. Scanner block housing
2. Access to sensitivity adjustment (located under the lower cover)
3. Status/alignment indicator LED
4. Mounting hole
5. Conduit entrance
6. Wiring terminals on the power block
7. Logic timing adjustment
8. Logic timing adjustment
9. Lower cover, supplied with the scanner block
10. Upper cover (lens), supplied with the scanner block
11. Light/dark operate select
12. Logic module

A scanner block consists of a scanner block housing, an upper cover assembly, and a lower cover. Other modular components (logic module and power block module) are purchased separately.

**WARNING:**

- **Do not use this device for personnel protection**
- Using this device for personnel protection could result in serious injury or death.
- This device does not include the self-checking redundant circuitry necessary to allow its use in personnel safety applications. A device failure or malfunction can cause either an energized (on) or de-energized (off) output condition.

## Models

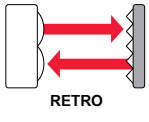


Retroreflective mode MULTI-BEAMs combine emitter and receiver into one unit. A retroreflective target is used to return the emitted light to the receiver along the same optical axis. Sensing occurs when an object passes between the sensor and the reflector, interrupting the beam. A variety of retroreflective materials are available, see Accessories on page 7.

| Models | Range | Response | Beam | Application Notes |
|---|---|---|---|---|
| SBLV1 | 0.15 m to 9 m (6 in to 30 ft) | 1 ms on/off | Visible Red, 650 nm | A visible red beam makes alignment very easy. SBLV1 is the first choice for most retroreflective applications. Not for use in dirty environments. Instead, use opposed mode, or models SBL1 and SBLX1. Do not locate retroreflector closer than 152 mm (6 in) from sensor. |
| SBLVAG1 | 0.3 m to 4.5 m (12 in to 15 ft) | | | Uses anti-glare filter for immunity to direct reflections from shiny objects. Use only with models BRT-3 or BRT-1.5 retroreflective targets. Use only in clean environments. Do not locate retroreflector closer than 305 mm (12 in) from sensor. |
| SBL1 | 0.025 m to 9 m (1 in to 30 ft) | | Infrared, 940 nm | Use where invisible beam is advantageous (for example, security applications or film processing). First choice for retroreflective sensing in slightly or moderately dirty environments. Do not use when object to break the beam has a shiny surface, unless the angle of light to the surface can be predicted. |
| SBLX1 | 3 m to 22 m (10 ft to 75 ft) with one BRT-3<br>3 m to 30 m (10 ft to 100 ft) with three BRT-3 targets | 10 ms on/off | Infrared, 880 nm | Highest gain available in a retroreflective sensor. Use for all applications requiring more than 9 m (30 ft) range where opposed mode sensors cannot be used. Objects must pass at a distance of at least 3 m (10 ft) from the sensor to be reliably sensed. |

Original Document
03493 Rev. C

8 July 2022

03493

ПРОМЭЛЕКТРОНИКА/ sales@prom-elec.com

## MULTI-BEAM Scanner Block Modifications

The following are common modifications to MULTI-BEAM 3- and 4-wire scanner blocks. They are not stocked, but are available on a quote basis.

**Zero Hysteresis Modification "MZ"**. Amplifier hysteresis may be removed from 3- and 4-wire scanner blocks when attempting to sense very small signal changes (contrasts less than 3). This modification is designated by adding suffix "MZ" (modified zero hysteresis). Verify all variables affecting the sensor's optical response remain constant before ordering the zero hysteresis modification.

**High Speed Modification "MHS"**. Scanner blocks with 1 millisecond response may be modified for 300 microsecond (0.3 ms) response. This modification is designated by adding suffix "MHS" to the scanner block model number (for example, SBLV1MHS). The MHS modification reduces the available excess gain by about 50% and also decreases the sensor's immunity to some forms of electrical noise.

## Overview

A Banner MULTI-BEAM sensor is a compact modular self-contained photoelectric switch consisting of three components: a scanner block, a power block, and a logic module.

The **scanner block**, described in this datasheet, comprises the housing for the sensor and contains a complete modulated photoelectric amplifier, the emitter or receiver optoelements and lenses, and space for the other modules.

The **power block** module provides the interface between the scanner block and the external circuit. It contains a power supply for the MULTI-BEAM plus a switching device to interface the sensor to the circuit to be controlled. Three- and four-wire dc power block modules operate from dc voltages are discussed in datasheet 03499. Three- and four-wire ac power blocks operate from ac voltages and are covered in datasheet 03501.

The **logic module** (datasheet 03304) interconnects the power block and receiver scanner block both electrically and mechanically. It provides the desired timing logic function (if any) plus the ability to program the output for either light- or dark-operate.

Power block and logic modules are purchased separately. This modular design, with field-replaceable power block and logic modules, permits a large variety of sensor configurations, resulting in exactly the right sensor for any retroreflective mode photoelectric application.

MULTI-BEAM 3- and 4-wire retroreflective mode scanner blocks include four different standard models. The high power model (model SBLX1) offers the greatest optical sensing power of any industrial retroreflective sensor.

The circuitry of all MULTI-BEAM components is encapsulated within rugged, corrosion-resistant PBT polyester housings that meet or exceed NEMA 1, 3, 12, and 13 ratings. MULTI-BEAM 3- and 4-wire retroreflective mode scanner blocks include Banner's Alignment Indicating Device (AID™) system, which lights a top-mounted LED when the sensor sees its modulated light source and pulses at a rate proportional to the strength of the received light signal.

All MULTI-BEAM scanner blocks are totally solid-state for unlimited life.

*Figure 1. Functional Schematic*

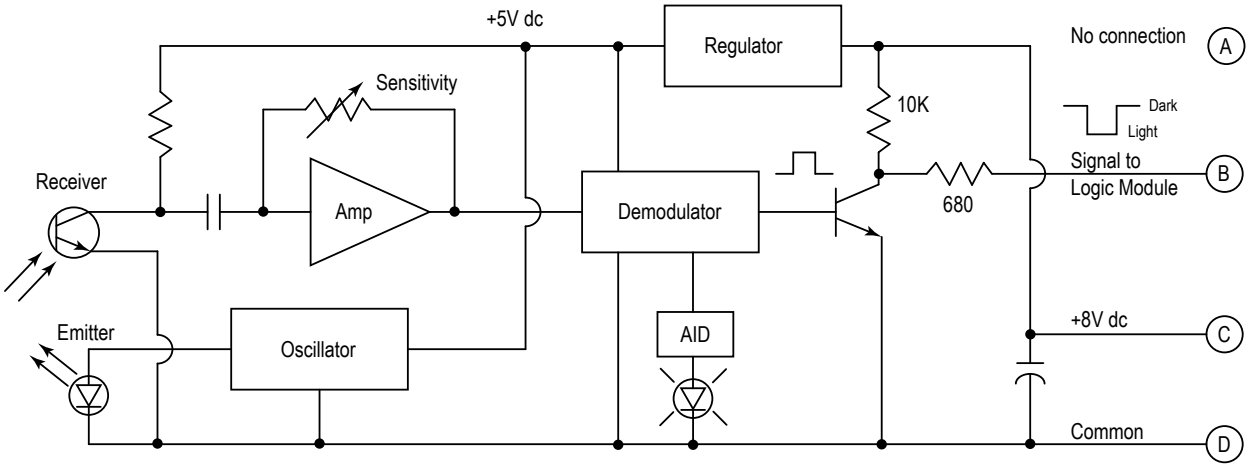


## Banner's Alignment Indicating Device (AID™) System

Banner's Alignment Indicating Device (AID) system [1] is an exclusive built-in feature that permits optimum alignment and continuous minoring of the photoelectric system. The red receiver LED indicator is on when the receiver sees the modulated light from the emitter and is off when the beam is broken. In addition, a low frequency pulse rate is superimposed on the LED indicator. When alignment is marginal, the pulse rate will be about once per second (indicating an excess gain of 1). As alignment is improved, the pulse rate increases, indicating increased excess gain. Optimum sensor alignment is indicated by the fastest pulse rate.

[1] U.S. Patent 4356393

The AID feature also tells you when maintenance is necessary. Any pulse rate less than two per second indicates marginal performance; the unit, however, is still functioning properly. When the pulse rate slows to less than two per second, clean the lenses and check the alignment.

## Installation and Alignment

Retroreflective mode photoelectric sensing is ideal for many applications for which opposed mode sensing would be the first choice, but where sensing is possible from only one side of the process. Retroreflective is the most popular sensing mode for conveyor applications where objects are large and the environment is relatively clean. It is also the most common sensing mode used in code reading applications using retroreflective code plates.

Retroreflective sensors work with special target materials that reflect the emitted light beam back to the sensor. The efficiency of these targets (and therefore the sensing range) depends upon the size and the reflectivity of the target. Size is important because at rangers beyond a few feet, the retroreflective target may not intercept the complete beam. At an extended range, a 76 mm (3 in) diameter target will intercept nine times as much light as a 25 mm (1 in) diameter target (the area ratio is the square of the diameter ratio). The 25 mm (1 in) target will therefore require nine times the excess gain required for the 76 mm (3 in) target. At extended ranges, a cluster of targets can yield higher gain and longer range than one target alone. At close range, however, both targets may intercept the beam equally well. Recommended reflectors available from Banner are listed in Retroreflective Target Materials on page 7.

Reflectivity is a function of target construction. Most plastic targets are made up of small, highly efficient corner-cube reflectors. Most reflective tape, on the other hand, uses glass beads or smaller, less efficient corner cubes. The retroreflective materials listed in the table at the right are listed in order of reflectivity, the 76 mm (3 in) diameter model BRT-3 corner-cube retroreflector being the best.

Successful retroreflective mode sensing depends upon adequate optical contrast between the dark state (beam broken) and the light state (beam unbroken). Retroreflective sensing, therefore, works best with object of low reflectivity. Highly reflective objects such as glass, polished metal, mirrors, etc. may not be sensed because they can reflect as much or nearly as much light back to the sensor as does the retroreflective target. This effect is known as proxing, and can in some cases be overcome by sensing at a skew angle to the object's surface, see Instructions on page 3. Use of a polarizing filter and corner-cube reflector may also help to minimize proxing, see Instructions on page 3. At the other extreme, transparent objects are difficult to sense retroreflectively because they may not sufficiently interrupt the sensors light beam.

*Figure 2. Retroreflective scanning using a skew angle to avoid proxing*

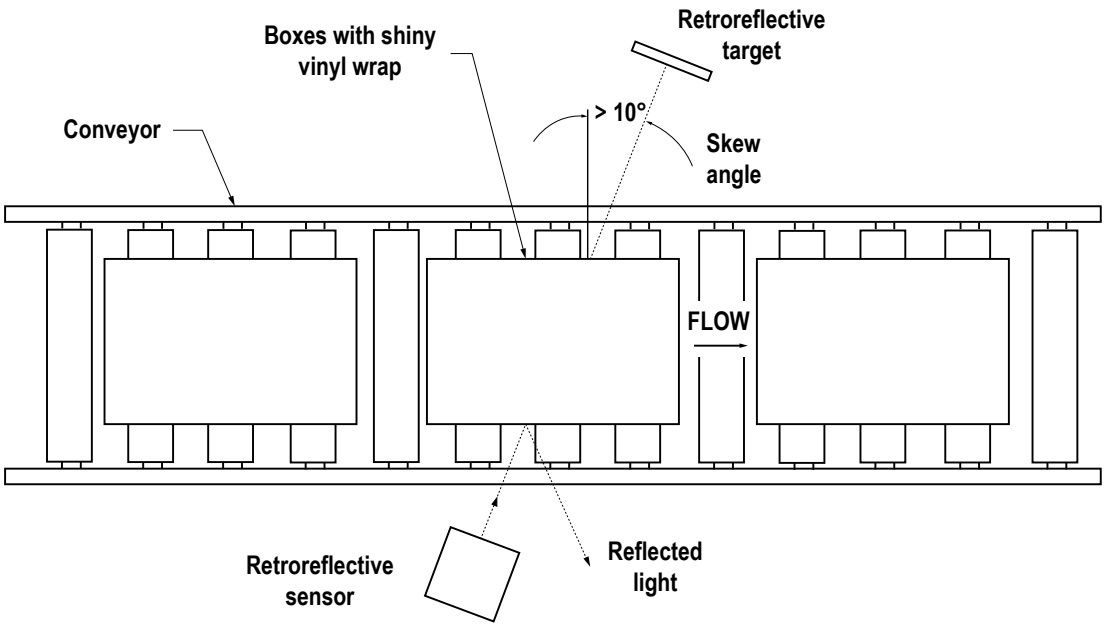


Proper operation of retroreflective mode sensors requires that they be mounted securely and aligned properly. Excessive movement or vibration can result in intermittent or false operation caused by loss of alignment to the retroreflective target. Banner offers a variety of two- and three-axis mounting brackets for use with MULTI-BEAM sensors. See www.bannerengineering.com for bracket information.

### Instructions

Use the Alignment Indicating Device LED on the top of the sensor during alignment.

1. Loosely mount the sensor at the desired distance from the retroreflective target.

   Retroreflective targets are forgiving to beam angle in that they do not begin to lose effectiveness until they are more than fifteen degrees off of perpendicular to the beam axis.

   An object at the sensing position should pass through the core of the sensor's light beam.

2. Apply power to the MULTI-BEAM power block (terminals #1 and #2; observe polarity on DC models).
3. Adjust the position of the MULTI-BEAM relative to the object for the fastest pulse rate of the alignment indicator.
   a) If the **target** position is fixed, tilt the sensor up/down and rotate right/left to obtain the fastest indicator LED pulse rate (no object at the sensing position). Secure the sensor in position.
   b) If the **sensor** position is fixed, move the target up/down and right/left to obtain the fastest indicator LED pulse rate (no object at the sensing position). Secure the sensor in position.

   If the LED appears to be on, it is actually pulsing at a rate too fast to be seen. Slow the pulsing to a countable rate by reducing the sensitivity (counterclockwise rotation of the adjustment). Being able to count the change in the pulse rate when the position of the sensor or reflector is changed will allow accurate alignment.

   With visible light sensors, it should be possible to visually sight the red sensing beam on the target, then make final sensor and/or target position adjustments using the LED indicator.

   At long sensing distances, such as over 4.6 m (15 ft), finding the target with the sensor beam may be difficult. Take a second target and walk backwards away from the sensor, always keeping the target aligned to the beam (up/down/right/left target movement; observe LED indicator). When you reach the target's mounting surface, the correct target position or necessary sensor orientation will be obvious.
4. Turn the sensor's sensitivity control to the fully clockwise position. (This is a 15-turn control, clutched at both ends of travel.)
5. Place the object to be detected at the sensing position. If the alignment indicator LED goes off, check operation by alternately removing and replacing the object.
   The LED should follow the action by turning on when the object is present and turning off when the object is present. If this occurs, alignment is complete.

   **Note:** A steady on condition of the LED with the object absent is the best situation, but this may not always be possible to achieve.
6. If the alignment indicator stays on when the object is present at the sensing position, the MULTI-BEAM is reacting to light reflected directly from the object (proxing is taking place). Reduce the sensitivity (counterclockwise rotation of the adjustment) until the alignment indicator LED goes off, plus two more full turns. Remove the object from the sensing position and check that the alignment indicator LED goes on steadily or is pulsing at more than two beats per second. Repeat the previous step.

   If the sensor cannot be adjusted so that the LED goes from on to off when the object is placed in position, consider the following alternatives:

   - If the object has flat sides, mount the sensor and retroreflective target so that the light beam encounters the object's reflecting surface at an angle. The angle may be either vertical, horizontal, or both. Angles of 10 to 15 degrees are sufficient. This often eliminates many unwanted reflections.
   - If the distance to the retroreflective target is more than a few feet, use a larger target (or several targets) to reflect more light back to the sensor (as compared to the light reflected back to the sensor from the object). If possible, substitute a more efficient retroreflective material (that is, a plastic corner-cube reflector in place of reflective tape, etc.). These measures will increase the optical contrast (light-to-dark ratio) between the retroreflective target and the object.
   - If the application allows use of a visible light retroreflective sensor, try model SBLVAG1, which uses a polarizing filter to minimize proxing effects. You must use a corner-cube type reflector in this application. The light returned to the sensor from a shiny object is blocked in the sensor's upper cover, while the light reflected from a corner-cube retroreflective target is allowed through.

## Final Adjustment and Test

When alignment is completed and mounting hardware secured, finish wiring the scanner block by connecting the load to the output circuit of the power block (terminals 3 and/or 4). Refer to the hookup diagram for the power block in use. Check the operation of the load by placing an object in front of the sensing component (lens or sensing tip) and removing it. The load and the alignment indicator LED should follow the action. Adjust the logic module timing (if any), as required.

Logic modules (except models LM1, LM2, and LM10) include a light/dark programming jumper. Removing the jumper will invert the output state of the power block from normally open to normally closed, or vice versa.

**CAUTION:** DO NOT remove the programming jumper while power is applied to the MULTI-BEAM.

If you have any difficulties with the installation of your sensing system, contact your local Banner Engineering Corp representative or contact our applications engineers during normal business hours.

# Troubleshooting

| Symptom | Probable Cause | Correction |
|---|---|---|
| Alignment indicator never comes on, and output never switches the load. | Sensitivity is too low. | Turn sensitivity control clockwise to increase gain. |
| | Retro target is outside of the MULTI-BEAM's field of view. | Follow alignment procedure. |
| | Loose connection. | Check power supply at power block terminals one and two. |

| Symptom | Probable Cause | Correction |
|---|---|---|
| | Failure of a sensor component. | Test the MULTI-BEAM using Banner model LMT.<br>Replace a failed module. |
| Alignment indicator never comes on, but load is switched correctly. | Broken alignment indicator LED (sensor will continue to operate). | Replace scanner block (if alignment indicator is required). |
| Alignment indicator is always on, and output never switches. | False light returned by object passing through sensing beam. | Turn sensitivity control counterclockwise to decrease gain.<br>Angle the sensor if object is shiny.<br>Use model SBLVAG1 if range allows. |
| | Optical crosstalk from broken lens (only likely with model SBLX1). | Turn sensitivity control counterclockwise to decrease gain.<br>Tighten upper cover screws.<br>Replace upper cover assembly. |
| | Failure of sensor component. | Test the MULTI-BEAM using Banner model LMT.<br>Replace a failed module. |
| Alignment indicator follows the sensing action, normally, but the output is energized all of the time. | Output of power block failed (shorted). | Replace power block module.<br>Check load demand against power block switch rating. |
| Alignment indicator follows the sensing action, normally, but the output never energizes. | Failure of logic module or power block. | Test the MULTI-BEAM using Banner model LMT.<br>Replace a failed module. |
| | Loose connection. | Check wires to load. |
| Sensitivity cannot be set to sense the difference between the light and dark conditions. The sensitivity is either too high or too low. | Low optical contrast (less than 2:1). | Increase difference in reflectivity between the light and dark conditions (follow alignment procedure, step 6).<br>Evaluate alternative sensing methods. |

## Specifications

**Supply Voltage**
Input power and output connections are made via 3- or 4-wire power blocks.
See datasheet 03499 (DC Power Blocks) or 03501 (AC Power Blocks)

**Response Time**
1 millisecond on and off.
High-gain model SBLX1: 10 milliseconds on and off.
Independent of signal strength.

**Repeatability of Response**
0.3 milliseconds.
High-gain model SBLX1: 1.5 milliseconds.
Independent of signal strength.

**Sensitivity Adjustment**
Easily-accessible, located on top of scanner block beneath o-ring gasketed nylon screw cover.
15-turn clutched control, rotate clockwise to increase sensitivity.

**Alignment Indicator**
Red LED on top of scanner block.
Banner's exclusive, patented Alignment Indicating Device (AIM™) circuit lights the LED whenever the sensor detects its own modulated light source, and pulses the LED at a rate proportional to the received light level.

**Operating Temperature**
–40 °C to +70 °C (–40 °F to +158 °F)

**Construction**
Reinforced PBT polyester housing; components totally encapsulated.
Stainless steel hardware.
Meets NEMA standards 1, 3, 12, and 13.

## Dimensions

All measurements are listed in millimeters [inches], unless noted otherwise.

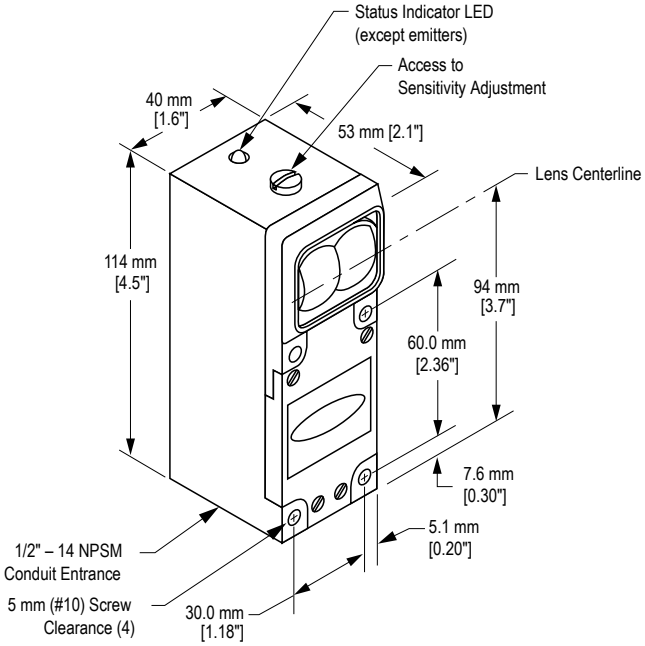


## Performance Curves

| Excess Gain | Beam Pattern |
|---|---|
| 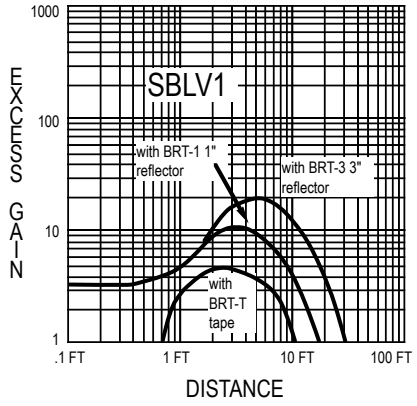 | 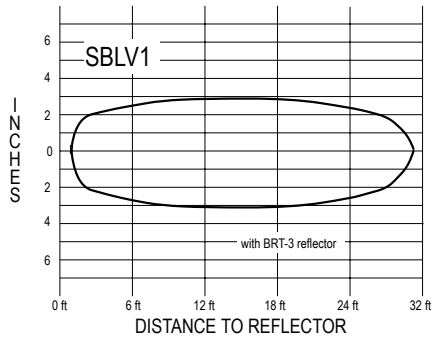 |
| 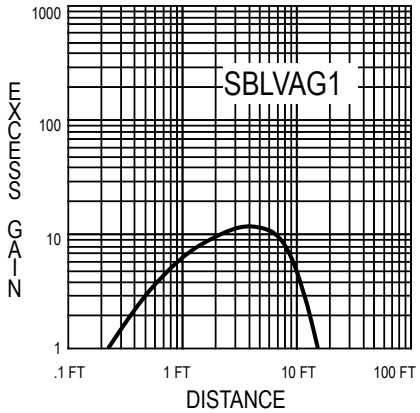 | 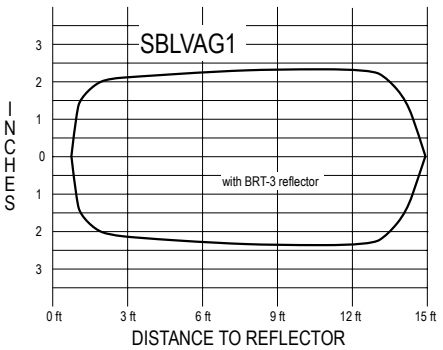 |

| Excess Gain | Beam Pattern |
|---|---|
| 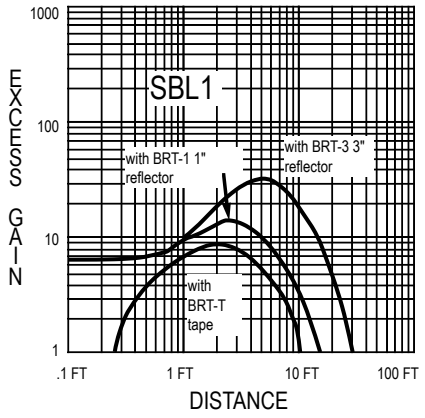 | 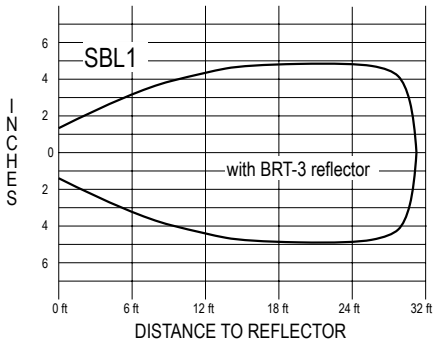 |
| 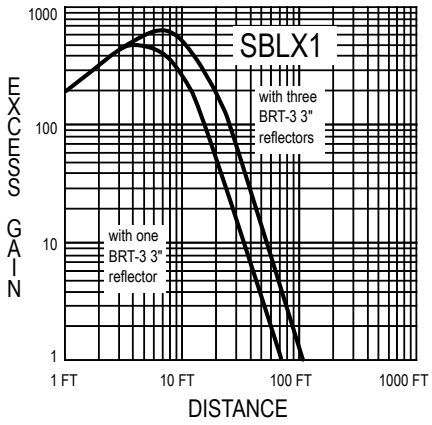 | 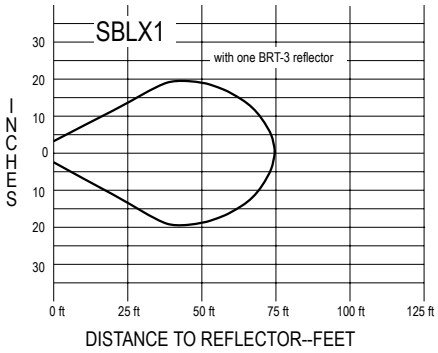 |









## Accessories

### Retroreflective Target Materials

MULTI-BEAM retroreflective sensors require special retroreflective targets for proper orientation. The reflector models listed below are recommended.

| | |
|---|---|
| BRT-3 | 76 mm (3 in) diameter round corner-cube reflector with central mounting hole |
| BRT-1.5 | 38 mm (1.5 in) diameter round corner-cube reflector with mounting flange |
| BRT-1 | 25 mm (1 in) diameter round corner-cube reflector with mounting flange |
| BRT-L | Linear target, 19 mm (0.75 in) height × 165 mm (6.5 in) width, with adhesive backing |
| BRT-THG | High-grade micro corner-cube tape, in sheets, squares, and tape; various widths and lengths, adhesive backing |
| BRT-T | Reflective tape, 25 mm (1 in) wide, various lengths, adhesive backing |
| BRT-THT | High-temperature reflective tape, 25 mm (1 in) wide, various lengths, adhesive backing |

Banner offers a wide selection of high-quality retroreflective targets. See www.bannerengineering.com for complete information.

**Note:** Polarized sensors require corner cube type retroreflective targets. Non-polarized sensors may use any retroreflective target.

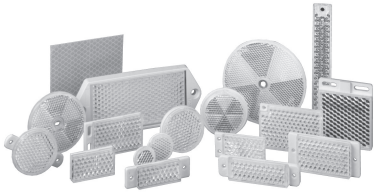

# Banner Engineering Corp. Limited Warranty

Banner Engineering Corp. warrants its products to be free from defects in material and workmanship for one year following the date of shipment. Banner Engineering Corp. will repair or replace, free of charge, any product of its manufacture which, at the time it is returned to the factory, is found to have been defective during the warranty period. This warranty does not cover damage or liability for misuse, abuse, or the improper application or installation of the Banner product.

**THIS LIMITED WARRANTY IS EXCLUSIVE AND IN LIEU OF ALL OTHER WARRANTIES WHETHER EXPRESS OR IMPLIED (INCLUDING, WITHOUT LIMITATION, ANY WARRANTY OF MERCHANTABILITY OR FITNESS FOR A PARTICULAR PURPOSE), AND WHETHER ARISING UNDER COURSE OF PERFORMANCE, COURSE OF DEALING OR TRADE USAGE.**

This Warranty is exclusive and limited to repair or, at the discretion of Banner Engineering Corp., replacement. **IN NO EVENT SHALL BANNER ENGINEERING CORP. BE LIABLE TO BUYER OR ANY OTHER PERSON OR ENTITY FOR ANY EXTRA COSTS, EXPENSES, LOSSES, LOSS OF PROFITS, OR ANY INCIDENTAL, CONSEQUENTIAL OR SPECIAL DAMAGES RESULTING FROM ANY PRODUCT DEFECT OR FROM THE USE OR INABILITY TO USE THE PRODUCT, WHETHER ARISING IN CONTRACT OR WARRANTY, STATUTE, TORT, STRICT LIABILITY, NEGLIGENCE, OR OTHERWISE.**

Banner Engineering Corp. reserves the right to change, modify or improve the design of the product without assuming any obligations or liabilities relating to any product previously manufactured by Banner Engineering Corp. Any misuse, abuse, or improper application or installation of this product or use of the product for personal protection applications when the product is identified as not intended for such purposes will void the product warranty. Any modifications to this product without prior express approval by Banner Engineering Corp will void the product warranties. All specifications published in this document are subject to change; Banner reserves the right to modify product specifications or update documentation at any time. Specifications and product information in English supersede that which is provided in any other language. For the most recent version of any documentation, refer to: www.bannerengineering.com.

For patent information, see www.bannerengineering.com/patents.



© Banner Engineering Corp. All rights reserved