EZ-LIGHT® for EZ-SCREEN LS®

Datasheet

LED status indicator

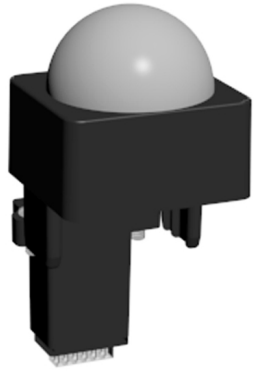

Model	Light Colors	Connector
EZLSA-K30LGR (patent pending)	Red and green	Integral connector attaches to the end cap of a cascadable EZ-SCREEN LS receiver with two Phillips-head screws
EZLSA-K30LXR (patent pending)	Red	

Specifications

Supply Voltage and Current
24 V dc ±15%; 15 mA typical; 40 mA maximum
Powered by the EZ-SCREEN
EZLSA-K30LGR models: only one color is on at a time

Connections
Integral connector for use with EZ-SCREEN LS only

Indicators
EZLSA-K30LGR Models

	Solid	Flashing	Off
Green LED	OSSDs ON		No power
Red LED	OSSDs OFF	Lockout (OSSDs OFF)	No power

EZLSA-K30LXR Models

	Solid	Flashing	Off
Red LED	OSSDs OFF	Lockout (OSSDs OFF)	No power

Entire translucent diffuser or dome provides 360° indication

Construction
30 mm translucent UV stabilized polycarbonate dome; polycarbonate housing

Environmental Rating
IEC IP65; IEC IP67

Operating Conditions
−20 °C to +55 °C (−4 °F to +131°F)
95% maximum relative humidity (non-condensing)

ПРОМЭЛЕКТРОНИКА/ sales@prom-elec.com

Dimensions

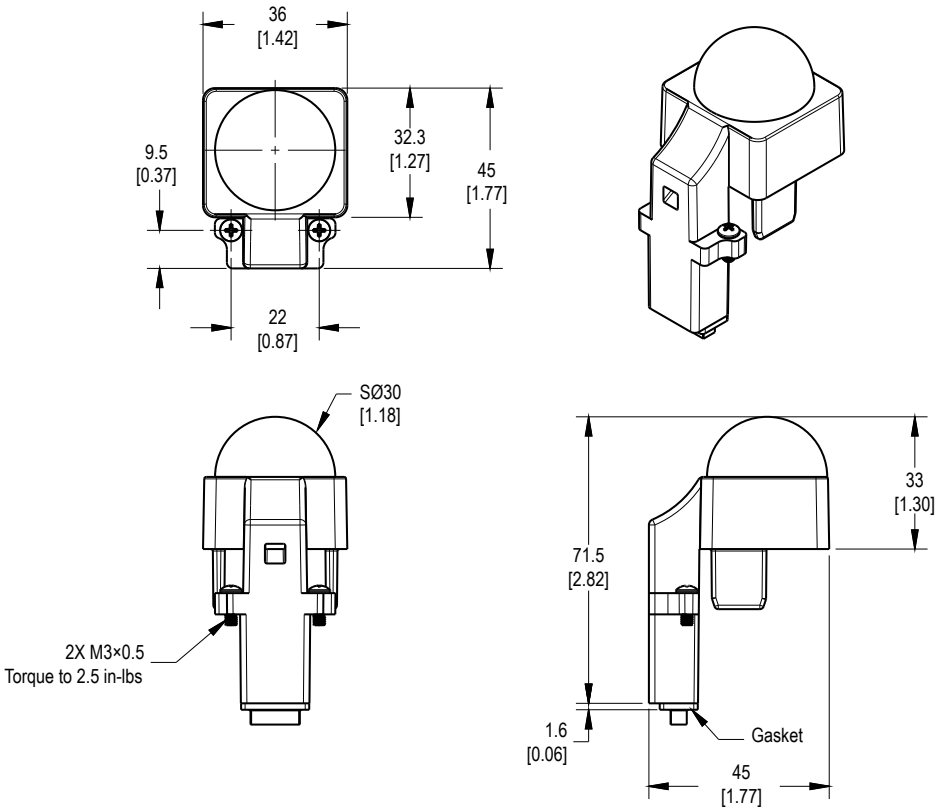

Banner Engineering Corp. Limited Warranty

Banner Engineering Corp. warrants its products to be free from defects in material and workmanship for one year following the date of shipment. Banner Engineering Corp. will repair or replace, free of charge, any product of its manufacture which, at the time it is returned to the factory, is found to have been defective during the warranty period. This warranty does not cover damage or liability for misuse, abuse, or the improper application or installation of the Banner product.

THIS LIMITED WARRANTY IS EXCLUSIVE AND IN LIEU OF ALL OTHER WARRANTIES WHETHER EXPRESS OR IMPLIED (INCLUDING, WITHOUT LIMITATION, ANY WARRANTY OF MERCHANTABILITY OR FITNESS FOR A PARTICULAR PURPOSE), AND WHETHER ARISING UNDER COURSE OF PERFORMANCE, COURSE OF DEALING OR TRADE USAGE.

This Warranty is exclusive and limited to repair or, at the discretion of Banner Engineering Corp., replacement. IN NO EVENT SHALL BANNER ENGINEERING CORP. BE LIABLE TO BUYER OR ANY OTHER PERSON OR ENTITY FOR ANY EXTRA COSTS, EXPENSES, LOSSES, LOSS OF PROFITS, OR ANY INCIDENTAL, CONSEQUENTIAL OR SPECIAL DAMAGES RESULTING FROM ANY PRODUCT DEFECT OR FROM THE USE OR INABILITY TO USE THE PRODUCT, WHETHER ARISING IN CONTRACT OR WARRANTY, STATUTE, TORT, STRICT LIABILITY, NEGLIGENCE, OR OTHERWISE.

Banner Engineering Corp. reserves the right to change, modify or improve the design of the product without assuming any obligations or liabilities relating to any product previously manufactured by Banner Engineering Corp.

Copyright Notice

Any misuse, abuse, or improper application or installation of this product or use of the product for personal protection applications when the product is identified as not intended for such purposes will void the product warranty. Any modifications to this product without prior express approval by Banner Engineering Corp will void the product warranties. All specifications published in this document are subject to change; Banner reserves the right to modify product specifications or update documentation at any time. For the most recent version of any documentation, refer to: www.bannerengineering.com. © Banner Engineering Corp. All rights reserved.