MODEL NO.	"L"	P/N
BT66ST5-VL	2000	96023
BT63ST5-VL	1000	96012

NOTES:

2. OPERATING TEMPERATURE AT TIP -140°C ~ +249°C.
3. MINIMUM BEND RADIUS R25.

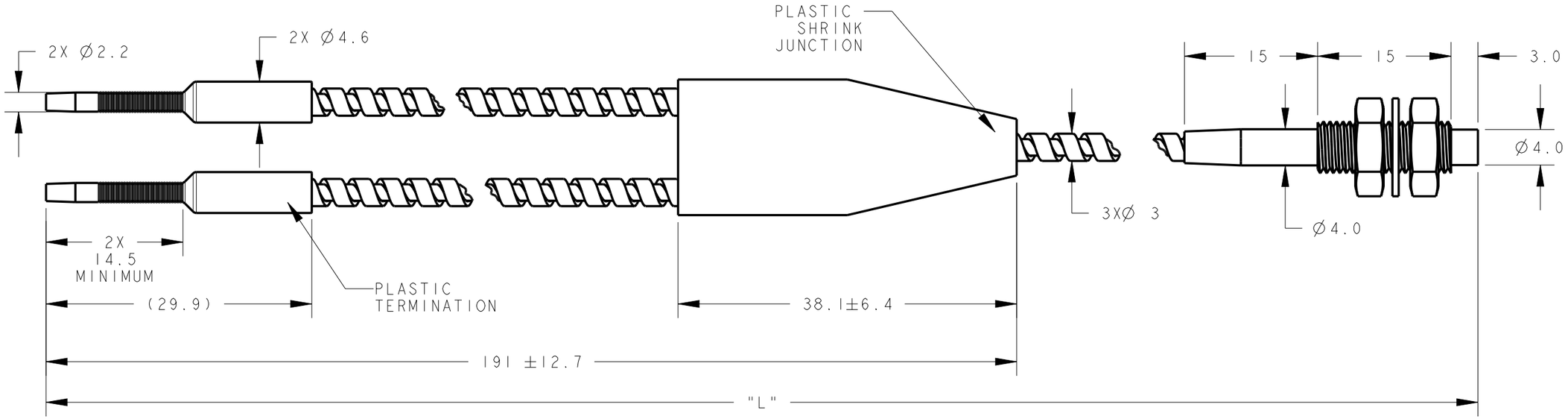

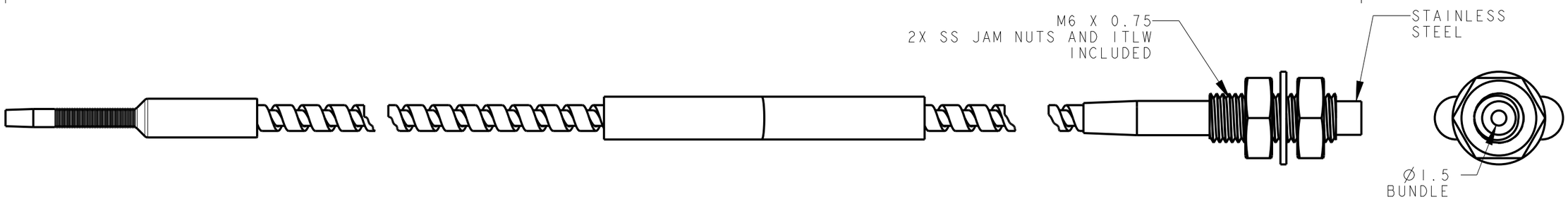

This drawing is the property of BANNER ENGINEERING CORP. Any use or reproduction, in any form, without prior written permission of Banner is prohibited.
© 2015 Banner Engineering Corp.

THIRD ANGLE PROJECTION

BANNER ENGINEERING CORP.
www.bannerengineering.com

TITLE

BT6 SERIES GLASS FIBER M6 THREAD VL

SIZE	DRAWING NO.	REV.
B	189693	B
SCALE 2:1	SHEET 1 OF 1	

NOTES:
1. ALL DIMENSIONS ARE MILLIMETERS [INCHES] UNLESS OTHERWISE NOTED.
2. REFER TO "www.bannerengineering.com" FOR ADDITIONAL DATA AND SPECIFICATIONS.

CREO

ПРОМЭЛЕКТРОНИКА/ sales@prom-elec.com