Sure Cross® Gateway B2Q Board Module for Wireless Q45 Sensors

Datasheet

The B2Q Gateway is a configurable Gateway radio module that maps inputs from up to four Nodes or two Wireless Q45 Sensors to the Gateway's outputs.

Sure Cross® embeddable board radio modules provide connectivity where traditional wired connections are not possible or are cost prohibitive. Wireless networks are formed around a Gateway, which acts as the wireless network master device, and one or more Nodes. Sure Cross embeddable board radio modules communicate with all Sure Cross radios.



- Wireless industrial I/O device with two sourcing discrete inputs and two sourcing discrete outputs
- 10 V DC to 30 V DC power input
- DIP switches allow the user to select one of eight defined I/O mapping configurations to automatically map the Nodes' inputs to this Gateway's outputs
- Site Survey analyzes the network's signal strength and reliability and conveys the results using the two-color LED
- Frequency Hopping Spread Spectrum (FHSS) technology ensures reliable data delivery
- Transceivers provide bidirectional communication between the Gateway and Node, including fully acknowledged data transmission
- Lost RF links are detected and relevant outputs set to user-defined conditions

For additional information, updated documentation, and a list of accessories, refer to Banner Engineering's website, www.bannerengineering.com.

Models

Models	Frequency	Inputs and Outputs
DX80G2M6-B2Q	2.4 GHz ISM Band	**Inputs**: Two sourcing discrete **Outputs**: Two sourcing discrete

Configure and Install Your Q45 Network

Follow these steps to set up and install your Wireless Q45 network.

1. On the Wireless Q45 Sensor Node:
   a) Configure the DIP switches (if applicable).
   b) Apply power.
2. On the Gateway or DXM:
   a) Configure the DIP switches (if applicable).
   b) Wire the I/O.
   c) Apply power.
3. Bind the Q45 to the master radio.
4. Observe the LED behavior to verify the devices are communicating to each other.
5. Using the configuration software, configure the I/O mapping between the Q45 and its master radio.
6. Conduct a Site Survey between the Gateway and the Wireless Q45.
7. Install your devices.

Configure the DIP Switches

Before changing DIP switch positions, disconnect the power. Any changes made to the DIP switches are not recognized until after power is cycled to the device.

For devices powered by batteries integrated into the housing, triple-click button 2, then double-click button 2 to reset the device without removing the battery.

For parameters not set using the DIP switches, use the configuration software to make configuration changes. For parameters set using the DIP switches, the DIP switch positions override any changes made using the configuration software.

Original Document
164298 Rev. H

16 December 2021

164298

ПРОМЭЛЕКТРОНИКА/ sales@prom-elec.com

DIP Switch Settings

Transmit Power

The 900 MHz radios transmit at 1 Watt (30 dBm) or 250 mW (24 dBm). The 250 mW mode reduces the radio's range but improves the battery life in short range applications. For 2.4 GHz models, this DIP switch is disabled. The transmit power for 2.4 GHz is fixed at about 65 mW EIRP (18 dBm).

DIP Switch 1	Transmit Power Level
OFF *	1 Watt (30 dBm, 900 MHz models only)
ON	250 mW (24 dBm, 900 MHz models only), DX80 compatibility mode

Modbus/UCT Configured or DIP Switch Configured

In Modbus/Software Configured mode, use the DX80 Performance Configuration Software or a Modbus command to change the device parameters. DIP switch positions 3 through 8 are ignored. In DIP Switch Configured mode, use the DIP switches to configure the parameters listed in the table. By default, this Gateway uses the DIP switches to configure the device.

DIP Switch 2	Modbus/UCT Configured or DIP Switch Configured
OFF *	DIP switch configured
ON	Modbus or UCT configured (DIP switches 3-8 are ignored)

Output State During a Radio Link Loss

The Sure Cross® wireless devices use a deterministic radio link time-out method to address RF link interruption or failure. When a radio link fails, all pertinent wired outputs are set to defined states until the link is recovered, ensuring that disruptions in the communications link result in predictable system behavior. Select the state the outputs are changed to during a link loss.

DIP Switches		Output State During a Radio Link Loss
3	4	
OFF *	OFF *	Off (discrete) or 0 mA (analog)
ON	OFF	Hold last stable state
OFF	ON	On (discrete) or 20 mA (analog)
ON	ON	Reserved

* Default configuration

Heartbeat

In heartbeat mode, the Nodes send "heartbeat" messages to the Gateway at specific intervals to indicate the radio link is active. The heartbeat is always initiated by the Node and is used only to verify radio communications.

DIP Switch 5	Heartbeat Settings
OFF *	30 seconds (30 to 60 second link loss timeout)
ON	5 seconds (5 to 10 second link loss timeout)

* Default configuration

I/O and Link Loss Alarm Mapping for Wireless Q45 Sensors

The link loss alarm is set to zero (0) when the radio link is working and set to one (1) when the radio link is lost.

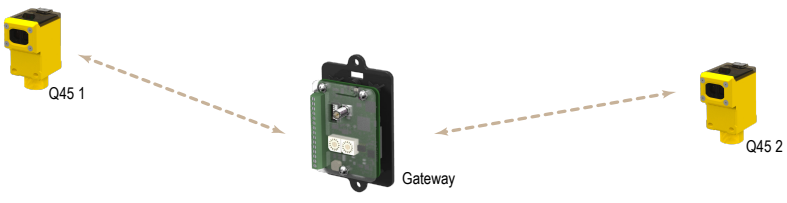

DIP Switches			I/O Mapping
6	7	8	
OFF *	OFF *	OFF *	Q45 01, input 1 → Gateway Discrete OUT 1 Q45 02, input 1 → Gateway Discrete OUT 2
OFF	ON	OFF	Q45 01, input 1 → Gateway Discrete OUT 1 Q45 01 link loss alarm → Gateway Discrete OUT 2
ON	OFF	OFF	Q45 01, input 1 → Gateway Discrete OUT 1 Q45 01, input 2 → Gateway Discrete OUT 2 Gateway Discrete IN 1 → Q45 01, output 1 Gateway Discrete IN 2 → Q45 01, output 2

* Default configuration. To use up to 47 Nodes or Wireless Q45 Sensors with this Gateway, you must use a Modbus host controller system. For more information about using a host controller system, refer to the *Host Configuration* manual, Banner document part number 132114.

I/O Mapping for one DX80N2X6S-PB2 Node and a DX80G2M6S-B2Q Gateway



DIP Switches			
6	7	8	I/O Mapping Between a DX80N2X6S-PB2 and a DX80G2M6S-B2Q Gateway
ON	OFF	ON	Node 01 Discrete IN 1 → Gateway Discrete OUT 1 Node 01 Discrete IN 2 → Gateway Discrete OUT 2 Gateway Discrete IN 1 → Node 01 Discrete OUT 1 Gateway Discrete IN 2 → Node 01 Discrete OUT 2

I/O Mapping for two DX80N2X6S-PB2 Nodes and a DX80G2M6S-B2Q Gateway



DIP Switches			
6	7	8	I/O Mapping Between a DX80N2X6S-PB2 and a DX80G2M6S-B2Q Gateway
ON	ON	OFF	Node 01 Discrete IN 1 → Gateway Discrete OUT 1 Node 02 Discrete IN 1 → Gateway Discrete OUT 2 Gateway Discrete IN 1 → Node 01 Discrete OUT 1 Gateway Discrete IN 2 → Node 02 Discrete OUT 1

Wire the Gateway's I/O and Apply Power

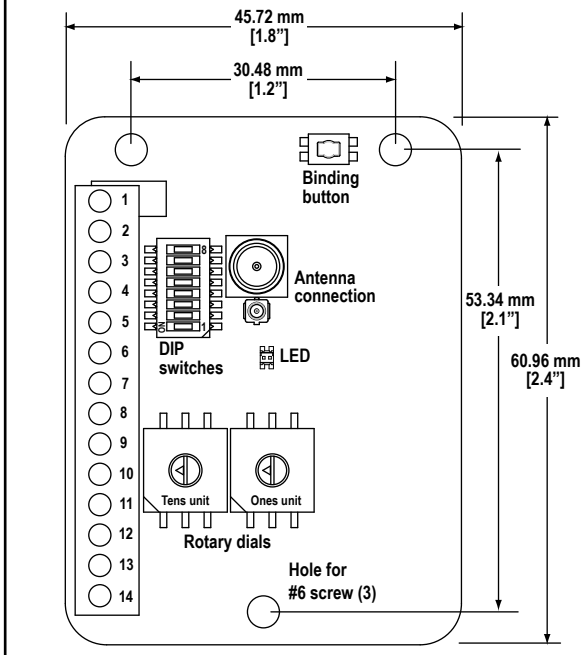

Pin	Description	Label
1		
2		
3	Discrete IN 1 (PNP)	DI1
4	Discrete IN 2 (PNP)	DI2
5	Ground [1]	GND
6	Discrete OUT 1 (PNP)	DO1
7	Discrete OUT 2 (PNP)	DO2
8		
9		
10		
11		
12	Ground	GND
13	10 to 30 V DC	PWR
14		

Figure 1. Input and Output Wiring

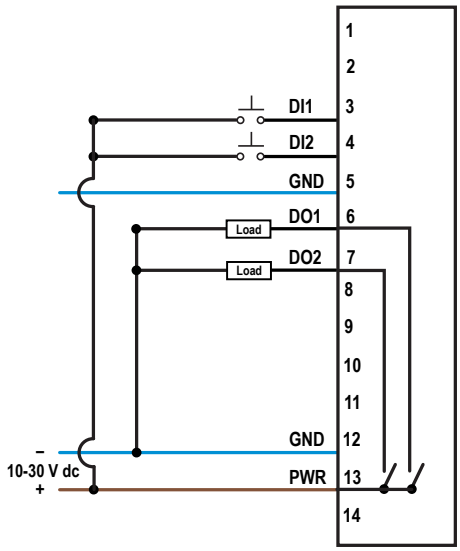

Bind to the Gateway and Assign the Node Address

Before beginning the binding procedure, apply power to all the devices. Separate the devices by two meters when running binding procedure. Put only one Gateway into binding at a time to prevent binding to the wrong Gateway.

1. On the Gateway: Enter binding mode.
   - For housed DX80 Gateways, triple-click button 2 on the Gateway. Both LEDs flash red.
   - For Gateway board modules, triple-click the button. The green and red LED flashes.
2. Assign the Gateway or Node a Node address using the Gateway's rotary dials. Use the left rotary dial for the left digit and the right rotary dial for the right digit. For example, to assign your Gateway or Node to Node 10, set the Gateway's left dial to 1 and the right dial to 0. Valid Node addresses are 01 through 47.

[1] The three ground connections are tied together internally.



3. On the Q45: Loosen the clamp plate on the top of the Gateway or Node and lift the cover.
4. Enter binding mode on the Gateway or Node by triple-clicking the Gateway or Node's button.
   The red and green LEDs flash alternately and the sensor searches for a Gateway in binding mode. After the Gateway or Node is bound, the LEDs stay solid momentarily, then they flash together four times. The Gateway or Node exits binding mode.
5. Label the sensor with the Gateway or Node's Node address number for future reference.
6. Repeat steps 2 through 5 for as many Gateway or Nodes as are needed for your network.
7. On the Gateway: After binding all Gateway or Nodes, exit binding mode.
   - For housed DX80 Gateways, double-click button 2.
   - For board-level DX80 Gateways, double-click the button.

For Gateways with single-line LCDs: After binding your Gateway or Node to the Gateway, make note of the binding code displayed under the Gateway's *DVCFG menu, XADR submenu on the LCD. Knowing the binding code prevents having to re-bind all Gateway or Nodes if your Gateway is ever replaced.

LED Behavior for the Gateways

Verify all devices are communicating properly. The radios and antennas must be a minimum distance apart to function properly. Recommended minimum distances are:

900 MHz 150 mW and 250 mW radios: 6 feet
900 MHz 1 Watt radios: 15 feet
2.4 GHz 65 mW radios: 1 foot

LED (Bi-color)	Gateway Status
Solid green	Power ON
Green and red flashing alternately	Binding mode
Flashing red	Device Error
Green and red flashing together, looks amber	Modbus Communication Active
Flashing red	Modbus Communication Error
Solid red	Gateway is trying to conduct a Site Survey with a Node that doesn't exist
Green and red solid together, looks amber)	No radio communication detected

For Gateway and Ethernet Bridge systems, active Modbus communication refers to the communication between the Gateway and the Ethernet Bridge. For Gateway-only systems, the Modbus communication LEDs refer to the communication between the Gateway and its host system (if applicable).

Conduct a Site Survey from a Gateway Board Model

Conducting a Site Survey, also known as an RSSI (Radio Signal Strength Indication), analyzes the radio communications link between the Gateway and any Node within the network by analyzing the radio signal strength of received data packets and reporting the number of missed packets that required a retry.

Perform a Site Survey before permanently installing the radio network to ensure reliable communication. Only the Gateway can initiate a Site Survey, and the Site Survey analyzes the radio communications link with one Node at a time. Follow these steps to conduct a Site Survey from the board module Gateway.

1. Set the Gateway's rotary dials to the Node address you'd like to conduct a Site Survey with.

   For example, to analyze the signal strength between this Gateway and Node 02, rotate the left rotary dial to 0 and the right rotary dial to 2.

   The Site Survey automatically begins running. If there is no device at address 02, the LED is solid red. If there is a device at address 02, the LED flashes amber.
2. Evaluate the signal strength. The amber LED flashes at specific rates to indicate the Site Survey results. Each signal strength represents the majority of the data packets being received at that signal strength. For example, a strong signal strength indicates the majority of the data packets were received at a strong signal, but a few may have been received at a good or weak signal strength.
   - Eight flashes per second: Very strong signal strength
   - Four flashes per second: Strong signal strength
   - Two flashes per second: Good signal strength
   - One flash per second: Weak signal strength
   - Solid amber LED: No radio communication detected
3. To exit the Site Survey, set the Gateway's rotary dials to 00. Otherwise, after 15 minutes the Gateway automatically exits Site Survey mode.
   The LED flashes green to indicate the Gateway is in standard operating mode.

Modbus Register Table

I/O #	Modbus Holding Register		I/O Type	I/O Range		Holding Register Representation	
	Gateway	Any Node		Min.	Max.	Min. (Dec.)	Max. (Dec.)
1	1	1 + (Node# × 16)	Discrete IN 1	0	1	0	1
2	2	2 + (Node# × 16)	Discrete IN 2	0	1	0	1
		...					
7	7	7 + (Node# × 16)	Reserved				
8	8	8 + (Node# × 16)	Device Message				
9	9	9 + (Node# × 16)	Discrete OUT 1	0	1	0	1
10	10	10 + (Node# × 16)	Discrete OUT 2	0	1	0	1
		...					
15	15	15 + (Node# × 16)	Control Message				
16	16	16 + (Node# × 16)	Reserved				

Specifications

Performance 2.4 GHz Radio Specifications

Radio Range [2]
2.4 GHz, 65 mW: Up to 3.2 km (2 miles)

Antenna Minimum Separation Distance
2.4 GHz, 65 mW: 0.3 m (1 ft)

Radio Transmit Power
2.4 GHz, 65 mW: 18 dBm (65 mW) conducted, less than or equal to 20 dBm (100 mW) EIRP

Spread Spectrum Technology
FHSS (Frequency Hopping Spread Spectrum)

2.4 GHz Compliance
FCC ID UE300DX80-2400: FCC Part 15, Subpart C, 15.247
Radio Equipment Directive (RED) 2014/53/EU
IC: 7044A-DX8024
ANATEL: 15966-21-04042 Este equipamento não tem direito à proteção contra interferência prejudicial e não pode causar interferência em sistemas devidamente autorizados. Para maiores informações, consulte o site da ANATEL www.gov.br/anatel/pt-br/

Antenna Connection
Ext. Reverse Polarity SMA, 50 Ohms
Max Tightening Torque: 0.45 N·m (4 lbf·in)

Link Timeout (Performance)
Gateway: Configurable via User Configuration Software
Node: Defined by Gateway

Specifications for the B2Q

Supply Voltage
10 V DC to 30 V DC; Outside the USA: 12 V DC to 24 V DC, ± 10% (For European applications, power this device from a Limited Power Source as defined in EN 60950-1.)

Interface
One bi-color LED indicator; One button

Wiring Access
Terminal block

Discrete Inputs
Rating: 3 mA max current at 30 V DC
Sample Rate: 62.5 milliseconds
Report Rate: On change of state
ON Condition: Greater than 8 V
OFF Condition: Less than 5 V

Discrete Output
Update Rate: 1 second
ON Condition (PNP): Supply minus 2 V
OFF Condition (PNP): Less than 2 V
Output State Following Timeout: De-energized (OFF)

Discrete Output Rating (PNP)
100 mA max current at 30 V DC
ON-State Saturation: Less than 3 V at 100 mA
OFF-state Leakage: Less than 10 µA

Operating Conditions [3]
–40 °C to +85 °C (–40 °F to +185 °F)
95% maximum relative humidity (non-condensing)

Radiated Immunity
10 V/m (EN 61000-4-3)

Certifications
CE

Banner Engineering Europe Park Lane, Culliganlaan 2F bus 3, 1831 Diegem, BELGIUM

(CE approval only applies to 2.4 GHz models)

[2] Radio range is with the 2 dB antenna that ships with the product. High-gain antennas are available, but the range depends on the environment and line of sight. Always verify your wireless network's range by performing a Site Survey.
[3] Operating the devices at the maximum operating conditions for extended periods can shorten the life of the device.

Accessories for the Board Models

BWA-HW-034

- DIN rail clip, black plastic



MultiHop M-HBx and Performance PBx Models Mounted on the Base

Figure 2. Most MultiHop M-HBx and Performance PBx models ship from the factory mounted on a plastic base.

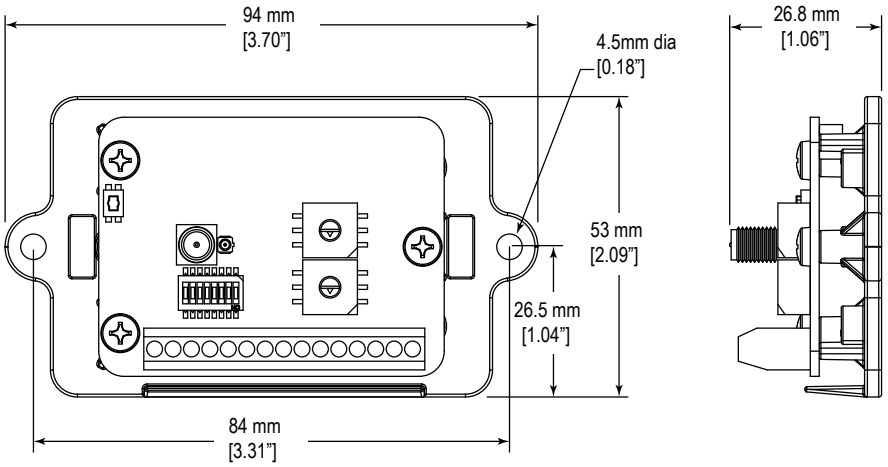

Warnings

Install and properly ground a qualified surge suppressor when installing a remote antenna system. Remote antenna configurations installed without surge suppressors invalidate the manufacturer's warranty. Keep the ground wire as short as possible and make all ground connections to a single-point ground system to ensure no ground loops are created. No surge suppressor can absorb all lightning strikes; do not touch the Sure Cross® device or any equipment connected to the Sure Cross device during a thunderstorm.

Exporting Sure Cross® Radios. It is our intent to fully comply with all national and regional regulations regarding radio frequency emissions. **Customers who want to re-export this product to a country other than that to which it was sold must ensure the device is approved in the destination country.** The Sure Cross wireless products were certified for use in these countries using the antenna that ships with the product. When using other antennas, verify you are not exceeding the transmit power levels allowed by local governing agencies. This device has been designed to operate with the antennas listed on Banner Engineering's website and having a maximum gain of 9 dBm. Antennas not included in this list or having a gain greater that 9 dBm are strictly prohibited for use with this device. The required antenna impedance is 50 ohms. To reduce potential radio interference to other users, the antenna type and its gain should be so chosen such that the equivalent isotropically radiated power (EIRP) is not more than that permitted for successful communication. Consult with Banner Engineering Corp. if the destination country is not on this list.

Important: Please download the complete Performance Gateway or Node technical documentation, available in multiple languages, from www.bannerengineering.com for details on the proper use, applications, Warnings, and installation instructions of this device.

Important: Por favor descargue desde www.bannerengineering.com toda la documentación técnica de los Performance Gateway or Node, disponibles en múltiples idiomas, para detalles del uso adecuado, aplicaciones, advertencias, y las instrucciones de instalación de estos dispositivos.

Important: Veuillez télécharger la documentation technique complète des Performance Gateway or Node sur notre site www.bannerengineering.com pour les détails sur leur utilisation correcte, les applications, les notes de sécurité et les instructions de montage.

WARNING:

- **Do not use this device for personnel protection**
- Using this device for personnel protection could result in serious injury or death.
- This device does not include the self-checking redundant circuitry necessary to allow its use in personnel safety applications. A device failure or malfunction can cause either an energized (on) or de-energized (off) output condition.

Important:

- **Never operate a 1 Watt radio without connecting an antenna**
- Operating 1 Watt radios without an antenna connected will damage the radio circuitry.
- To avoid damaging the radio circuitry, never apply power to a Sure Cross® Performance or Sure Cross MultiHop (1 Watt) radio without an antenna connected.

Important:

- **Electrostatic discharge (ESD) sensitive device**
- ESD can damage the device. Damage from inappropriate handling is not covered by warranty.
- Use proper handling procedures to prevent ESD damage. Proper handling procedures include leaving devices in their anti-static packaging until ready for use; wearing anti-static wrist straps; and assembling units on a grounded, static-dissipative surface.

Banner Engineering Corp. Limited Warranty

Banner Engineering Corp. warrants its products to be free from defects in material and workmanship for one year following the date of shipment. Banner Engineering Corp. will repair or replace, free of charge, any product of its manufacture which, at the time it is returned to the factory, is found to have been defective during the warranty period. This warranty does not cover damage or liability for misuse, abuse, or the improper application or installation of the Banner product.

THIS LIMITED WARRANTY IS EXCLUSIVE AND IN LIEU OF ALL OTHER WARRANTIES WHETHER EXPRESS OR IMPLIED (INCLUDING, WITHOUT LIMITATION, ANY WARRANTY OF MERCHANTABILITY OR FITNESS FOR A PARTICULAR PURPOSE), AND WHETHER ARISING UNDER COURSE OF PERFORMANCE, COURSE OF DEALING OR TRADE USAGE.

This Warranty is exclusive and limited to repair or, at the discretion of Banner Engineering Corp., replacement. **IN NO EVENT SHALL BANNER ENGINEERING CORP. BE LIABLE TO BUYER OR ANY OTHER PERSON OR ENTITY FOR ANY EXTRA COSTS, EXPENSES, LOSSES, LOSS OF PROFITS, OR ANY INCIDENTAL, CONSEQUENTIAL OR SPECIAL DAMAGES RESULTING FROM ANY PRODUCT DEFECT OR FROM THE USE OR INABILITY TO USE THE PRODUCT, WHETHER ARISING IN CONTRACT OR WARRANTY, STATUTE, TORT, STRICT LIABILITY, NEGLIGENCE, OR OTHERWISE.**

Banner Engineering Corp. reserves the right to change, modify or improve the design of the product without assuming any obligations or liabilities relating to any product previously manufactured by Banner Engineering Corp. Any misuse, abuse, or improper application or installation of this product or use of the product for personal protection applications when the product is identified as not intended for such purposes will void the product warranty. Any modifications to this product without prior express approval by Banner Engineering Corp will void the product warranties. All specifications published in this document are subject to change; Banner reserves the right to modify product specifications or update documentation at any time. Specifications and product information in English supersede that which is provided in any other language. For the most recent version of any documentation, refer to: www.bannerengineering.com.

For patent information, see www.bannerengineering.com/patents.

ANATEL

Modelo (Model): DX80-2400—Este equipamento não tem direito à proteção contra interferência prejudicial e não pode causar interferência em sistemas devidamente autorizados. Para maiores informações, consulte o site da ANATEL www.gov.br/anatel/pt-br/

ANATEL
Agência Nacional de Telecomunicações

ANATEL: 15966-21-04042

BANNER
more sensors, more solutions

© Banner Engineering Corp. All rights reserved