Descriptive Report and Test Results

MASTER CONTRACT: 150323
REPORT: 2679646
PROJECT: 80051475

Edition 1: January 10, 2014; Project 2679646 – Chester
Issued by B J Allen; Reviewed by J May (Dust) and I Hulse (all other protection concepts)

Edition 2: July 08, 2015; Project 70030638 – Derby, UK
Issued by Sripriya Kalyanasundaram; Reviewed by David Holton

Edition 3: August 15, 2018; Project 70188876 – Hawarden
Issued by B J Allen

Edition 4: October 19, 2020; Project 80051475 - Cleveland
Prepared By: Semyon Baum
Authorized By: Semyon Baum, Goutam Das

Report pages reissued

Contents: Certificate of Compliance - Page 1 to 4
Supplement to Certificate of Compliance – Page 1 to 1
Description and Tests - Pages 1 to 65

This report shall not be reproduced, except in full, without the approval of CSA Group.

8501 East Pleasant Valley Road, Cleveland, OH, U.S.A. 44131-5575
Telephone: 216-524-4990 1.800.463.6727 Fax: 216-642-3463 www.csagroup.org

© 2020 CSA Group. All rights reserved.

B_4189392C

ПРОМЭЛЕКТРОНИКА/ sales@prom-elec.com

PRODUCTS

CLASS 2258 04 - PROCESS CONTROL EQUIPMENT - Intrinsically Safe, Entity - For Hazardous Locations
CLASS 2258 84 - PROCESS CONTROL EQUIPMENT - Intrinsically Safe, Entity - For Hazardous Locations - Certified to US Standards

Class I, Div. 1, Groups A, B, C and D; Class II, Div. 1, Groups E, F and G; Class III, Div. 1;
Class I Zone 0 AEx/Ex ia IIC T4 Ga; Class II Zone 20 AEx/Ex ta IIIC T130°C Da:

Type K30LI and K50LI LED Indicator Lights; Entity Parameters Ui = 30 V; Ii = 1 A; Pi = 3.4 W @ 40˚C upper ambient; Pi = 2.8 W @ 50˚C upper ambient; Ci = 0; Li = 0. Tamb = -40°C to +40°C or +50°C as above. Intrinsically Safe per Control Document No. 172445.

CLASS 2258 02 - PROCESS CONTROL EQUIPMENT - For Hazardous Locations
CLASS 2258 82 - PROCESS CONTROL EQUIPMENT - For Hazardous Locations - Certified to U.S. Standards

Class II, Div. 1, Groups E, F and G; Class III, Div. 1;
Class I Zone 1 AEx/Ex mb IIC T4 Gb; Class II Zone 20 AEx/Ex ta IIIC T135°C Da:

Type K50LM LED Indicator Lights; Vmax = 30 V; Imax = 25 mA; Tamb = -40°C to +50°C. Install per Control Document No. 171982.

Class I Zone 1 AEx/Ex mb IIC T4 Gb:

Type K30LM LED Indicator Lights; Vmax = 30 V; Imax = 25 mA; Tamb = -40°C to +50°C. Install per Control Document No. 171982.

Class I, Div. 2, Groups A, B, C and D; Class II, Div. 2, Groups E, F and G; Class III, Div. 2;
Class I Zone 2 AEx/Ex nA IIC T4 Gc; Class II Zone 22 AEx/Ex tc IIIC T135°C Dc:

Type K50LN LED Indicator Lights; Vmax = 30 V; Imax = 25 mA; Tamb = -40°C to +50°C. Install per Control Document No. 171983.

Class I, Div. 2, Groups A, B, C and D;
Class I Zone 2 AEx/Ex nA IIC T4 Gc:

Type K30LN LED Indicator Lights; Vmax = 30 V; Imax = 25 mA; Tamb = -40°C to +50°C. Install per Control Document No. 171983.

CONDITIONS OF ACCEPTABILITY

- Under certain extreme circumstances, the non-metallic parts incorporated in the enclosure of this equipment may generate an ignition-capable level of electrostatic charge. Therefore, the equipment shall not be installed in a location where the external conditions are conducive to the build-up of electrostatic charge on such surfaces. This is particularly important if the equipment is installed in a Zone 0 location. In addition, the equipment shall only be cleaned with a damp cloth. This is particularly important if the equipment is installed in a Zone 0 location.
- The connector option requires protection to the connector when installed (Ex nA versions only). The connector should not be connected/disconnected while the area is known to be hazardous.

© 2020 CSA Group. All rights reserved.

APPLICABLE REQUIREMENTS

Standards	
CAN/CSA-C22.2 No. 0-M91 (R2011)	General Requirements – Canadian Electrical Code, Part II
CSA Ordinary Locations Standards	
CAN/CSA-C22.2 No. 61010-1-12 (2018)	Safety requirements for electrical equipment for measurement, control, and laboratory use — Part 1: General requirements
CSA Hazloc Division Standards	
C22.2 No. 25-1966 (R2009)	Enclosures for Use in Class II, Groups E, F and G Hazardous Locations
CAN/CSA-C22.2 No. 157-92 (R2006)	Intrinsically Safe and Non-Incendive Equipment for Use in Hazardous Locations
C22.2 No. 213-M1987 (R2008)	Non-Incendive Electrical Equipment for Use in Class I, Division 2 Hazardous Locations
CSA Hazloc Zone Standards	
CAN/CSA-C22.2 No. 60079-0:11 Ed. 5	Explosive Atmospheres - Part 0: Equipment - General requirements
CAN/CSA-C22.2 No. 60079-11:11 Ed. 5	Explosive Atmospheres – Part 11: Equipment protection by intrinsic safety "i"
CAN/CSA-C22.2 No. 60079-15:12 Ed. 3	Electrical apparatus for explosive gas atmospheres - Part 15: Construction, test and marking of type of protection “n” electrical apparatus
CAN/CSA-C22.2 No. 60079-18:12 Ed. 1	Explosive Atmospheres – Part 18: Equipment protection by encapsulation "m"
CAN/CSA-C22.2 No. 60079-31:12 Ed. 1	Explosive Atmospheres – Part 31: Equipment dust ignition protection by enclosure "t”
US Ordinary Locations standards	
UL 61010-1, 3rd Edition	Safety requirements for electrical equipment for measurement, control, and laboratory use — Part 1: General requirements
US Hazloc Division Standards	
UL 913 (7th Ed.)	Intrinsically Safe Apparatus and Associated Apparatus for Use in Class I, II and III, Division 1, Hazardous Locations
UL 1203 (4th Ed.) (Pt 2 only)	Explosion-Proof and Dust-Ignition-Proof Electrical Equipment for Use in Hazardous (Classified) Locations
ANSI/ISA-12.12.01-2012	Nonincendive Electrical Equipment for Use in Class I and II, Division 2 and Class III, Divisions 1 and 2 Hazardous (Classified) Locations
US Hazloc Zone Standards	
UL 60079-0:09	Electrical Apparatus for Explosive Gas Atmospheres - Part 0: General Requirements
UL 60079-11:09	Electrical apparatus for Explosive Gas Atmospheres - Part 11: Intrinsic Safety “i”
UL 60079-15:09	Electrical apparatus for Explosive Gas Atmospheres - Part 15: Type of Protection “n”
UL 60079-18:12	Explosive Atmospheres – Part 18: Equipment protection by encapsulation "m"
ANSI/ISA-60079-31 (12.10.03)-2009	Explosive Atmospheres – Part 31: Equipment Dust Protection by Enclosure “t”

MARKINGS

The manufacturer is required to apply the following markings:

© 2020 CSA Group. All rights reserved.

- Products shall be marked with the markings specified by the particular product standard.
- Products certified for Canada shall have all Caution and Warning markings in both English and French.

Additional bilingual markings not covered by the product standard(s) may be required by the Authorities Having Jurisdiction. It is the responsibility of the manufacturer to provide and apply these additional markings, where applicable, in accordance with the requirements of those authorities.

The products listed are eligible to bear the CSA Mark shown with adjacent indicators 'C' and 'US' for Canada and US (indicating that products have been manufactured to the requirements of both Canadian and U.S. Standards) or with adjacent indicator 'US' for US only or without either indicator for Canada only.

Marking to include:

- Company name;
- Company address;
- Serial number;
- Install control document number;
- CSA Monogram;
- Any markings as per 'PRODUCT' section of this report.

Note: Due to the small size of the products extra installation information for the product is detailed in the install control diagram listed on the label.

ALTERATIONS

The maximum cable length has been restricted to 29 metres for the Div 1, AExia, Exia, Zone 0 versions of the LED Indicators, limited by the allowed inductance at a current of 1A.

FACTORY TESTS

None.

SPECIAL INSTRUCTIONS FOR FIELD SERVICES

1. Component descriptions marked with either the "(INT)" or "(INT*)" identifiers may be substituted with other components providing the requirements specified under the notes in the "Description" are complied with.
2. This report contains reference to certain construction and engineering documents that have been deemed critical to ensuring continued compliance with applicable construction and performance requirements. A list of these documents, with drawing numbers and the appropriate revision levels is summarized in this report. Documents detailed herein are subject to inspection by CSA International personnel and shall be made available in the manufacturing location upon request. Failure to produce these documents in a timely manner constitutes noncompliance and is subject to the actions outlined in the CSA Product Service Agreement.

COMPONENT SPECIAL PICKUP

1. Component descriptions marked with the identifier "(CT)" are subject to annual pickup and Conformity Testing.

© 2020 CSA Group. All rights reserved.

DESCRIPTION

Notes:

1. Component Substitution
   a) Critical components (those identified by mfr name, cat no), which are NOT identified with either "INT" or "INT*" are not eligible for substitution without evaluation and report updating
   b) The term "INT" means a "Certified" and/or "Listed" (or a "Recognized" and/or "Accepted") component may be replaced by one "Certified" and/or "Listed" by another certification organization accredited by the appropriate accreditation body or scheme requirements to the correct standard, for the same application; providing the applicable country identifiers are included and requirements in item "d" below are complied with.
   c) The Term "(INT*)" means a "Recognized" and/or "Accepted" component may be replaced by a component that is CSA Certified. The applicable country identifiers shall be included, the requirements in item "d" below as well as any "conditions of suitability" for the component (as recorded in this descriptive report) shall be complied with;
   d) Components which have been substituted, must be of an equivalent rating, configuration (size, orientation, mounting) and the applicable minimum creepage and clearance distances are to be maintained from live parts to bonded metal parts and secondary parts.
   e) Substitution of a "Certified" and/or "Listed" component with a component that is "Recognized" or "Accepted" is not permitted without evaluation and report updating.
   f) Substitution of a "Recognized" and/or "Accepted" component by one that is not CSA Certified is not permitted without a proper evaluation as well as a report update because the Conditions of Acceptance of the original component may be different than the Conditions of Acceptance of the substitute component.

Product Description

Type K30L and K50L LED Indicator Lights comprise LEDs mounted on a printed circuit board and encapsulated within a plastic housing with a translucent dome. The Type K50L is physically larger than the K30L having more LEDs than the K30L. The indicator lights have either a screw on plug and socket connector or an integral cable fitted for the electrical connections.

The equipment has the following intrinsically safe entity parameters for the Class I, II, Div 1, AEx ia, Zone 0 options which must be from an intrinsically safe supply:

Ui	=	30 V
Ii	=	1 A
Pi	=	3.4 W @ 40°C ambient temperature
Pi	=	2.8 W @ 50°C ambient temperature
Ci	=	0
Li	=	0

Tamb = -40°C to +40°C or +50°C as above.

The equipment has the following electrical parameters for the Encapsulated, Non-Incendive option, Class I, II, Div 2, AEx nA, and AEx mb options:

Vmax =30 V
Imax = 25 mA

Tamb = -40°C to +50°C

© 2020 CSA Group. All rights reserved.

The key safety features to check are:

The K30L and K50L indicators, dome material; Polycarbonate Bayer Makrolon 2407
The K30L base material, Sabic Lexan 243
The K50L base material, Sabic Lexan 143R-701

The encapsulant material is defined as follows:

Requirement	Specification
Name and address of manufacturer	Lord Corporation of 111 Lord Drive, Cary, NC 27511 USA
Generic type	Thermoset
Type designation	600 Resin and 65 Hardener
Percentage fillers	None
Other additives	None
Mix ratio	100:50
Surface treatment	None
Pre-treatment for adhesion	None
Continuous operating temperature (COT) range	-40°C to 130°C
Colour	Clear, transparent

Alternate encapsulant material:

Requirement	Specification
Name and address of manufacturer	EFI Polymers, 4600 Holly Street, Denver, CO 80216 USA
Generic type	Epoxy
Type designation	20003 Resin and 50127 Hardener
Percentage fillers	None
Other additives	None
Mix ratio	By Weight 100 to 40 By Volume 2 to 1
Surface treatment	None
Pre-treatment for adhesion	None
Continuous operating temperature (COT) range	130°C temperature rating
Colour	Clear

The 50mA fuse in the Exm version has separation distances around it which are at least 0.5mm.

There is a 33V zener diode connected in circuit across the input and output.

DESCRIPTIVE DOCUMENTS

The drawings listed below accurately describe the sample. It was verified that these documents give a full and accurate description of those aspects of the equipment relating to compliance with the listed relevant certification standards.

AExmb/ta Drawings

Drawing no.	Sheets	Rev	Title
08249	1 of 1	K	Nut M30 X 1.5
119759	1 of 1	-	PCB RAW panel (dimensions), T18 EZ light – K30L

© 2020 CSA Group. All rights reserved.

Drawing no.	Sheets	Rev	Title
128145	1 of 1	A	PCB RAW Panel (dimensions) K50L
133592	1 of 1	K	Base K30 EZ Light
133594	1 of 1	D	Nut M22 1.5
133595	1 of 1	A	Washer assembly
145878	1 of 1	A	Foam spacer EZ Light K30L
162904	1 of 1	D	Base K50 IS Black mounting base
164905	1 of 1	C	Cover K30 Light
164906	1 of 1	J	Cover K50 Light
168051	1 of 1	D	K50L, IS potting procedure, flying lead
169014	1 of 1	D	K50L, IS potting procedure, QD
169015	1 of 1	E	K30L potting procedure
171656	1 of 1	C	K30/K50 Hazardous Area AExmb Markings
171982	1 to 3	F	K30/K50 Hazardous Area AExmb control drawing
172718	1 and 2	A	PCB RAW, K30L Exmb EZ light
172718	1 to 4	A	PCB K30L track and component layout
172719	1 of 1	B	Schematic diagram K30L Exmb EZ light
172727	1 and 2	A	PCB assy, EZ LGT PNP3E GRY Exmb (172718)
172727	1 of 1	A	PCB assy, EZ LGT PNP3E GRY Exmb (172718)
172728	1 and 2	B	PCB RAW, K50L Exmb EZ light
172728	1 to 4	B	PCB K50L track and component layout
172729	1 of 1	E	Schematic diagram K50L Exmb EZ light
172737	1 and 2	A	PCB assy, K50L, EZ LGT PNP3E GRY Exmb (172728)
172737	1 of 1	A	PCB BOM, PCB assy, K50L, EZ LGT PNP3E GRY Exmb
172926	1 to 7	B	DWG K50L, Exmb Final assembly
172927	1 to 8	C	DWG K30L Exmb Final Assembly
173292	1 of 1	C	Flying lead
173494	1 of 1	A	Encapsulant specification

© 2020 CSA Group. All rights reserved.

AExia/nA/tc Drawings

Drawing no.	Sheets	Rev	Title
08249	1 of 1	-K	Nut M30 X 1.5
119759	1 of 1	-	PCB RAW panel (dimensions), T18 EZ light – K30L
128145	1 of 1	A	PCB RAW Panel (dimensions) K50L
133592	1 of 1	K	Base K30 EZ Light
133594	1 of 1	D	Nut M22 1.5
133595	1 of 1	A	Washer assembly
145878	1 of 1	A	Foam spacer EZ Light K30L
158032	1 of 1	B	PCB RAW, K30L Intrinsic Safe EZ light
158032	1 to 4	B	PCB K30L track and component layout
158033	1 of 1	K	Schematic diagram K30L EZ light Intrinsically safe
158034	1 to 2	A	PCB assy, K30L Intrinsically safe 3 colour
158034	1 of 1	A	PCB BOM, Intrinsically safe 3 colour
158251	1 of 1	B	PCB RAW, K50L Intrinsic Safe EZ light
158251	1 to 4	B	PCB K50L track and component layout
158252	1 of 1	J	Schematic diagram K50L EZ light Intrinsically safe
158358	1 to 2	A	PCB assy, K50L Intrinsically safe 3 colour
158358	1 of 1	A	PCB BOM, K50L Intrinsically safe 3 colour
162904	1 of 1	D	Base K50 IS Black mounting base
164905	1 of 1	C	Cover K30 Light
164906	1 of 1	J	Cover K50 Light
168051	1 of 1	D	K50L, IS potting procedure, flying lead
169012	1 to 7	B	K50L, IS Final assembly
169013	1 to 8	C	DWG K30L IS Final Assembly
169014	1 of 1	D	K50L, IS potting procedure, QD
169015	1 of 1	E	K30L potting procedure
171463	1 of 1	D	K30/K50 Hazardous Area AExia Markings
171657	1 of 1	C	K30/K50 Hazardous Area AExnA Markings
171983	1 to 4	C	K30/K50 Hazardous Area AExnA Control drawing
172445	1 to 7	D	K30/K50 Hazardous Area AExia Control drawing
173292	1 of 1	C	Flying lead

© 2020 CSA Group. All rights reserved.

TEST HISTORY

Edition 1 (Project 2679646)

Certification Overview

The K30L and K50L LED Indicators each provide three colours of indication. The whole of the PCB and electrical components including the LEDS are completely encapsulated in a translucent potting compound inside a translucent dome.

The approvals are for;

Intrinsically safe
Zone 0, Ga
Zone 20, Da
Class I, II, Div 1, AEx ia
The connections are made by either plug and socket or integral cable. The electrical parameters are listed above in the description.

Non-incendive.
Zone 2, Gc,
Zone 22, Dc
Class I, II, Div 2, AEx nA

Assessment against IEC 60079-0:2011

The circuit for the K30L is as follows:-

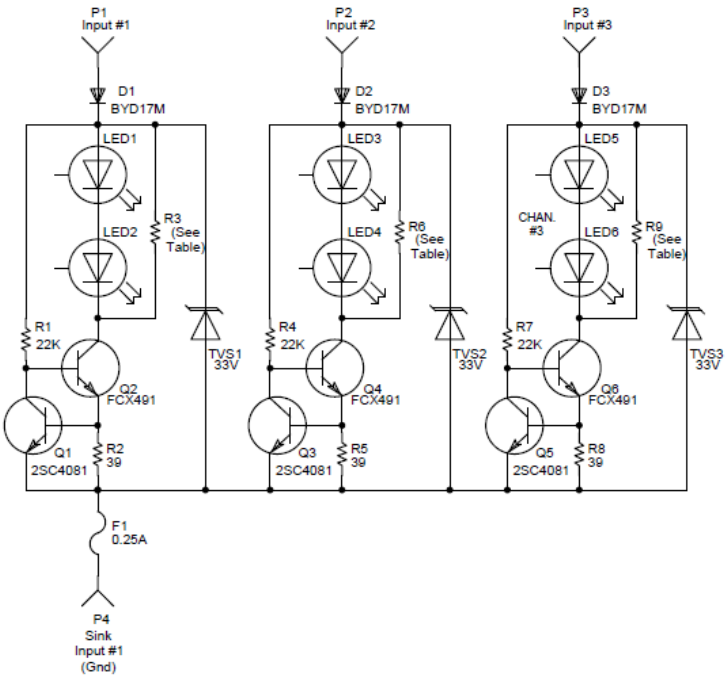

© 2020 CSA Group. All rights reserved.

The circuit for the K50L is as follows:-
The K50L has double the components of the K30L, except for one fuse fitted.

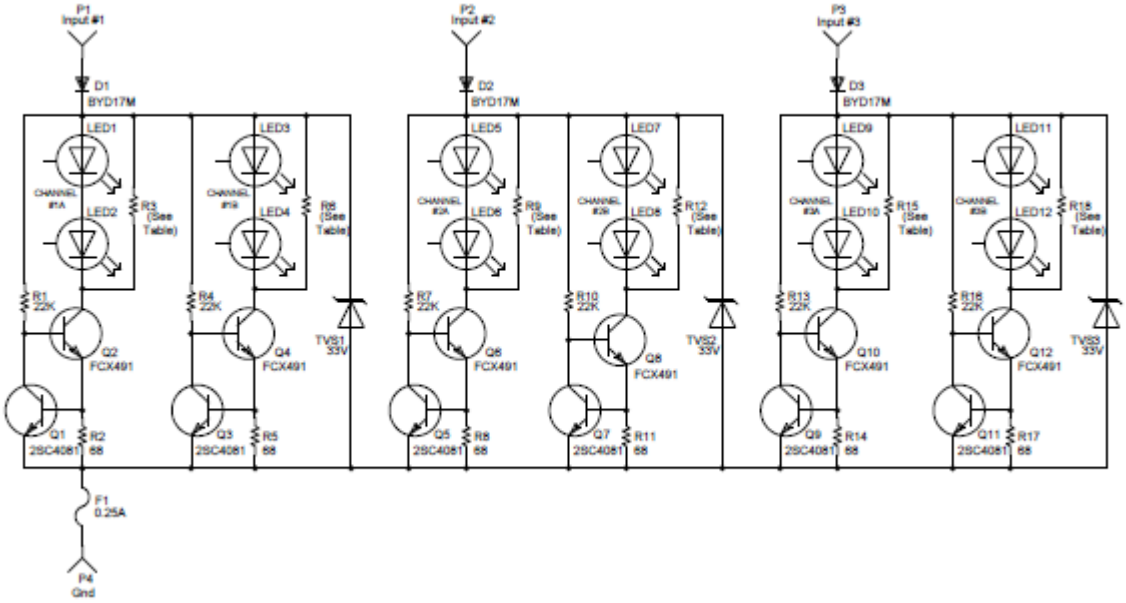

Metallic enclosures – light metal requirements
(IEC 60079-0:2011 Clause 8)

Not applicable.

Non-metallic enclosure requirements
(IEC 60079-0:2011 Clause 7 & 26.17)

Thermal endurance requirements
(IEC 60079-0:2011 Clause 7.2, 26.8, 26.9 & 26.16)

Thermal endurance carried out to IEC 60079-18, encapsulation, refer to section 9 of this report.

Resistance to chemical agents
(IEC 60079-0:2011 Clause 7 & 26.11)

Not applicable.

Resistance to light test/assessment
(IEC 60079-0:2011 Clause 7.3 & 26.10)

The outer enclosure and dome are made from UL rated plastics, yellow card details are in section 4.2.3 of this report.

Plastic electrostatic hazard assessment and tests
(IEC 60079-0:2011 Clause 7.4 & 26.7)

The enclosures are non-conducting with a static warning – see section Special Condition of Safe Use. This is reinforced by a Condition of Certification.

© 2020 CSA Group. All rights reserved.

Accessible metal parts
(IEC 60079-0:2011 Clause 7.5 & 26.14)

There are no accessible metal parts.

Impact test/assessment
(IEC 60079-0:2011 Clause 6.2, 26.4.2 & 26.4.4)

Impact test carried out to IEC 60079-18, encapsulation, refer to section 11 of this report.

Drop test/assessment
(IEC 60079-0:2011 Clause 6.2, 26.4.3 & 26.4.4)

The equipment is not portable therefore the drop test isn't a requirement.

Ingress protection method and test
(IEC 60079-0:2011 Clause 26.4.5 & 6.5)
(IEC 60079-11:2011 Clause 6.1)

The equipment is completely encapsulated except for the cable connector option.

Earthing continuity and circulating currents
(IEC 60079-0:2011 Clause 6.4)

Not applicable, earthing not required for the plastic cases used.

Cable pull test for intrinsically safe equipment
(IEC 60079-11:2011 Clause 10.9)

The intrinsically safe supplies are safe when all circuits are combined therefore this test isn't required.

Mechanical tests for exposed casting compound
(IEC 60079-11:2011 Clause 10.6.1)

There is no exposed casting compound; it is completely enclosed by the base and the translucent dome.

Opening times
(IEC 60079-0:2011 Clause 6.3)

The equipment cannot be opened.

Electromagnetic/ultrasonic energy radiating equipment

Not applicable

Radio Frequency Sources
(IEC 60079-0:2011 Clause 6.6.1) Ma, Mb, Ga, Gb, Gc, Da, Db, Dc

Not applicable

© 2020 CSA Group. All rights reserved.

Lasers or other continuous wave sources
(IEC 60079-0:2011 Clause 6.6.2) Ma, Mb, Da, Db, Dc, (IEC 60079-28:2006 Clause 5.2) Ga, Gb, Gc

Not applicable

Ultrasonic sources
(IEC 60079-0:2011 Clause 6.6.3) Ma, Mb, Ga, Gb, Gc, Da, Db, Dc

Not applicable

Fasteners
(IEC 60079-0:2011 Clause 9)

Not applicable, all parts bonded.

Interlocking devices
(IEC 60079-0:2011 Clause 10)

Not applicable

Bushings
(IEC 60079-0:2011 Clause 11)

Not applicable

Materials used for cementing
(IEC 60079-0:2011 Clause 12)

Not applicable

Ex Components and their mounting method
(IEC 60079-0:2011 Clause 13)

Not applicable

Connection facilities and terminal compartments
(IEC 60079-0:2011 Clause 14)

Not applicable, no terminal compartments.

Connection facilities for earthing or bonding conductors
(IEC 60079-0:2011 Clause 15)

Not applicable

Entries into enclosures
(IEC 60079-0:2011 Clause 16)

Not applicable, cable enters via the encapsulant.

© 2020 CSA Group. All rights reserved.

Supplementary requirements for rotating electrical machines
(IEC 60079-0:2011 Clause 17)

Not a rotating machine

Supplementary requirements for switchgear
(IEC 60079-0:2011 Clause 18)

Not switchgear.

Supplementary requirements for fuses
(IEC 60079-0:2011 Clause 19)

Not a fuse.

Supplementary requirements for plugs and sockets
(IEC 60079-0:2011 Clause 20)

The plug and socket version is used will all options except for the Ex m encapsulated version.

Supplementary requirements for luminaries
(IEC 60079-0:2011 Clause 21)

Not a luminaire.

Supplementary requirements for caplights and handlights
(IEC 60079-0:2011 Clause 22)

Not a caplight or handlight.

Thermal shock test
(IEC 60079-0:2011 Clause 26.5.2)

No glass parts therefore not applicable.

Marking requirements, including warning markings
(IEC 60079-0:2011 Clause 29)

See section Markings.

Instructions, including live maintenance procedures
(IEC 60079-0:2011 Clause 30)

An extract of the user instruction manual has been checked and found to comply with IEC 60079-0:2011 clause 30.
Control drawings are listed in the documents section on page 7 of this report.

Any other general aspects

None.

© 2020 CSA Group. All rights reserved.

Thermal ignition assessment and tests (5.6)
(IEC 60079-0:2011 Clause 5.3)
(IEC 60079-11:2011 Clause 5.6)

This section covers the requirements of IEC 60079-0 clause 5 and IEC 60079-11 clause 5.6.

The upper ambient temperature is either 40°C or 50°C depending upon the maxim supply power. The envisaged application does not indicate external heat sources are likely, but it is the responsibility of the installer to locate the equipment where its ambient range will not be exceeded.

The maximum power available to the circuit is to be defined as 3.4W in a 40°C upper ambient temperature or 2.8W in a 50°C upper ambient temperature for a T4 temperature class, based on the results below.

Components with a surface area greater than 10cm²
(IEC 60079-0:2011 Clause 5.3), (IEC 60079-11:2011 Clause 5.6)

Temperature rise tests carried out on samples of the K30L and K50L indicators in ambient temperatures of 40°C and 50°C up to a maximum surface temperature of 130°C gave the following results:

Indicator	Max Power at 40°C	Max Power at 50°C	Max surface temp
K30L	3.4W	2.8W	130°C +5K = 135°C
K50L	3.4W	3.04W	130°C +5K = 135°C

The power was increased until a surface temperature of 130°C reached. Refer to test section 11 for the test information.

Components with a surface area between 20mm² and 10cm²
(IEC 60079-0:2011 Clause 5.3.3), (IEC 60079-11:2011 Clause 5.6)

None.

Components with a surface area less than 20mm²
(IEC 60079-0:2011 Clause 5.3.3), (IEC 60079-11:2011 Clause 5.6)

None.

Components temperature assessment and tests, including small component ignition test
(IEC 60079-0:2011 Clause 5.3 & 26.5.3),(IEC 60079-11:2011 Clause 5.6)

None.

Wiring temperature assessment and tests
(IEC 60079-11:2011 Clause 5.6.3)

None, all under encapsulation.

Printed board tracks assessment and tests
(IEC 60079-11:2011 Clause 5.6.4)

The circuit board and components are all under encapsulation and are tested and recorded in other sections of this report. Refer to 2.29.1.

© 2020 CSA Group. All rights reserved.

Enclosure external temperature assessments and tests
(IEC 60079-0:2011 Clause 5.1.2)

The external enclosure surface temperature will not exceed 135°C, refer to 2.29.1 above, which permits a T4 temperature classification.

Service temperature determination and assessment
(IEC 60079-0:2011 Clause 5.2), (IEC 60079-0:2011 Clause 26.5.1.2)

The service temperature was determined by testing encapsulated circuit components when placed in a dry oven set at 50°C, and was found to be 86°C. Refer to section 11 for the test summary.

Any other thermal ignition assessments and tests

None.

National deviations

UL 60079-0:2013 Ed 6
Reference to the national differences of the UL equivalent standard UL 60079-0:2013 against IEC 60079-0-2011 shows that the differences cover many clauses that have no affect on this approval.

The clauses that have some minor impact on the IEC approval are;

Clause 29, Marking. The markings are different than the IEC version of the standard to incorporate the North American symbols. This doesn't affect the assessment.

CAN/CSA-C22.2 No. 60079-0:11 Ed 2

Reference to the national differences of the CSA equivalent standard CAN/CSA-C22.2 No. 60079-0:11 Ed 2 against IEC 60079-0-2011 shows that the differences include;
Clause 1. The scope
Clause 2. Normative references to CSA publications.
Clause 3. Terms and definitions
Clause 4, Addition of Canadian classifications.
Clause 5, The temperature class has been expanded
Clause 6.1, General requirements, A note change
Clause 16, Temperature at entries into enclosures require marking over 60°C under rated conditions.

The above differences don't affect the tests and assessments made to the IEC standard.

Clause 29: Marking, the marking symbols are different, and warnings to be shown in both English and French. The dust temperature class for non overloaded equipment must be less than 165°C. This equipment has a surface temperature of less than 135°C.
Clause 30, Instructions to be in both English and French

Assessment against IEC No. 60079-11:2011

Resistive safety and power assessment

Apparatus supply and input/output parameters
(IEC 60079-11:2011 Clause 5.5 & 10.1)

© 2020 CSA Group. All rights reserved.

The electrical input parameters for the intrinsically safe protected K30L and K50L indicators are as follows:-

Ui	=	30V
Ii	=	1A
Pi	=	3.4W @ 40°C ambient temperature
Pi	=	2.8W @ 50°C ambient temperature
Ci	=	0
Li	=	0

The values of Ii and Pi are the total value of maximum input current and maximum input power at all connections.

Resistive spark ignition assessment and tests
(IEC 60079-11:2011 Clause 5.5, 10.1, Annex A, Figure A.1 & Table A.1)

The power supply is intrinsically safe.

Cell spark ignition test
(IEC 60079-11:2011 Clause 5.5 & 10.5.3)

There are no cells to consider.

Protection against polarity reversal
(IEC 60079-11:2011 Clause 56.4)

There are no safety implications if the supply is reversed. But there is a Zener diode across each group of LEDs.

Capacitive spark ignition assessment
(IEC 60079-11:2011 Clause 5.5, 10.1, Annex A, Figures A.2 & A.3 and Table A.2)

There are no capacitors in the equipment.

Inductive spark ignition assessment and tests
(IEC 60079-11:2011 Clause 5.5, 10.1 & Annex A)

There are no inductors in the equipment.

Circuits with both inductance and capacitance.
(IEC 60079-11:2011 Clause 5.5, 10.1.5.2 & Annex A)

None.

Let-through energy assessment and tests
(IEC 60079-11:2011 Clause 10.1.5.3 & Annex E)

Not applicable

Connections when located in the non-hazardous area
(IEC 60079-11:2011 clause 6.2.5)

Not safe area equipment.

© 2020 CSA Group. All rights reserved.

Any other spark ignition assessments and tests
(IEC 60079-11:2011 Clause 5.5, 6.2.3, 10.1 & Annex A)

None.

Encapsulation
(IEC 60079-11:2011 Clause 6.6, 10.6.1 & 10.6.2)

The casting compound has been tested as part of the Exm approvals, refer to section 11

Casting compound is relied upon for the following reasons:

To reduce the surface temperature of the small components inside the assembly.

The casting compound is defined on drawing number 173494 in accordance with IEC 60079-11:2011 clause 6.6 as follows:

Detail	Description
Manufacturer	Lord Corporation
Generic name:	Thermoset
Type designation	600 resin and 65 hardener
COT	130°C

Thermal ignition assessment and tests
(IEC 60079-0:2011 Clause 5.3), (IEC 60079-11:2011 Clause 5.6)

See section 0

Physical Construction

Separation distances
(IEC 60079-11:2011 Clause 6.3)

There are no defined separation distances required to maintain the intrinsic safety integrity of the LED Indicators.

Printed circuit board, conformal coating
(IEC 60079-11:2011 Clause 6.3.9 & 6.3.10)

The PCB is standard FR4 epoxy fibre board and is not relied upon for safety. The whole PCB and components are completely encapsulated.

Terminals
(IEC 60079-11:2011 Clause 6.2.1)

None.

Plugs and Sockets
(IEC 60079-11:2011 Clause 6.2.2)

The LED Indicators have the option of an integral cable or plug and socket for external connections. There are no safety implications with either of these methods of connection.

© 2020 CSA Group. All rights reserved.

Partitions, including earth screens
(IEC 60079-11:2011 Clause 6.3.11)

None used.

Internal wiring
(IEC 60079-11:2011 Clause 6.3.12)

There is no internal wiring to consider.

Earth conductors, connections and terminals
(IEC 60079-11:2011 Clause 6.5)

No earthing is required.

Connectors for internal connections, plug-in cards and components
(IEC 60079-11:2011 Clause 7.2)

There are no internal connectors.

Infallible wiring, PCB tracks and connections
(IEC 60079-11:2011 Clause 8.8)

There are no infallible connections required for intrinsic safety:

Safety components
(IEC 60079-11:2011 Clause 8)

None used.

Transformers
(IEC 60079-11:2011 Clause 8.2, 10.10 & 11.2)

No transformers.

Resistors
(IEC 60079-11:2011 Clause 8.5)

There are no safety resistors.

Blocking and Filter Capacitors
(IEC 60079-11:2011 Clause 8.6)

No blocking capacitors are used.

Semiconductors
(IEC 60079-11:2011 Clause 7.5 & 8.7)

No semi-conductors are used for safety.

© 2020 CSA Group. All rights reserved.

Galvanically separating components
(IEC 60079-11:2011 Clause 8.9, & 10.11)

None used.

Isolating components between intrinsically safe and non-intrinsically safe circuits
(IEC 60079-11:2011 Clause 8.9.2)

None used.

Isolating components between separate intrinsically safe circuits
(IEC 60079-11:2011 Clause 8.9.3)

None used.

Relays
(IEC 60079-11:2011 Clause 6.3.14)

Non used.

Fuses
(IEC 60079-11:2011 Clause 7.3 & 10.6.2)

A fuse is fitted but is not relied upon for intrinsic safety. It is completely encapsulated.

Infallible windings
(IEC 60079-11:2011 Clause 8.4)

None to consider.

Any other safety components used

None.

Ratings of safety components (7.1)
(IEC 60079-11:2011 Clause 7.1)

None.

Cells and batteries
(IEC 60079-11:2011 Clause 7.4 & 10.5), (IEC 60079-0:2011 Clause 23)

None.

Piezo electric devices
(IEC 60079-11:2011 Clause 7.7 & 10.7)

None fitted.

© 2020 CSA Group. All rights reserved.

Dielectric strength test
(IEC 60079-11:2011 Clause 6.3.13, 10.3 & 11.2)

The LED indicators use a plastic enclosure and have been dielectric strength tested at 500Vrms for 1 minute, and have successfully met the requirements of this test, refer to section 11.

Safety barriers – assessments and tests
(IEC 60079-11:2011 Clause 9.1, 10.8 & 11.1)

Not a safety barrier.

Simple apparatus
(IEC 60079-11:2011 Clause 5.7)

Not simple apparatus.

Determination of parameters of loosely specified components
(IEC 60079-11:2011 Clause 10.4)

None used.

Ex components in intrinsically safe equipment
(IEC 60079-0:2011 Clause 13)

None used.

Electrochemical cells
(IEC 60079-11:2011 Clause 7.8)

None used.

Any other components

None.

Pressurisation of the enclosure by the process fluid

Not applicable.

FISCO equipment
(IEC 60079-11:2011 Clause 9.2 & Annex G)

Not Fisco.

Handlights and Caplights
(IEC 60079-11:2011 Clause 9.3 & IEC 60079-35-1)

Not applicable.

© 2020 CSA Group. All rights reserved.

Circuits using shunt short-circuit (crowbar) protection
(IEC 60079-11:2011 Clause 10.1.5.3 & Annex E)

None used.

Additional Assessment against IEC 60079-11 for Annex F or Group III

Not applicable.

Enclosures for Annex F or Group III apparatus
(IEC 60079-0:2011 Clause 6.1.2.3.a) or 6.1.3)

The circuits are completely encapsulated therefore meet IP6X requirements for Group III.

The maximum surface temperature of the enclosure was found to be 130°C.

Mechanical strength of equipment
(IEC 60079-0:2011 Clause 6.2)

It is considered that the encapsulated assembly will have adequate mechanical strength.

Gasket retention
(IEC 60079-0:2011 Clause 6.5)

A gasket is not used.

Non-metallic Enclosures or non-metallic parts of enclosures

Applicability
(IEC 60079-0:2011 Clause 7.1.1)

The equipment is made from non-metallic materials.

Specification of material
(IEC 60079-0:2011 Clause 7.1.2.1)

The materials are specified in the documents listed in section 11 of this report.

Plastic materials
(IEC 60079-0:2011 Clause 7.1.2.2)

The outer enclosure is made from two plastic parts. A translucent dome and an opaque base.

K30Land K50L translucent dome cover –Polycarbonate Bayer Makrolon 2407, drawing 133593.

The data for this material shows it to have an RTI value of 125, and has the f1 rating for UV resistance. A number of flammability ratings are shown on the data sheet, in particular UL 94.

K30L base PC Sabic Lexan 243, drawing 133592

The data for this material shows it to have an RTI value of 125, and has the f1 rating for UV resistance. A flammability rating is shown on the data sheet to UL 94.

© 2020 CSA Group. All rights reserved.

K50L base PC Sabic Lexan 143R-701, black, drawing 162904.

The data for this material shows it to have an RTI value of 120, and has the f1 rating for UV resistance. A flammability rating is shown on the data sheet to UL 94.

Elastomers
(IEC 60079-0:2011 Clause 7.1.2.3)

None used.

Thermal endurance
(IEC 60079-11:2011 Clause 7.2, 26.8 & 26.9)

The thermal endurance tests to heat and cold were carried out successfully on the indicators to meet the requirements of Exm, Ex nA and Ex ta dust protected equipment. Refer to section 11 of this report.

Resistance to light test/assessment
(IEC 60079-11:2011 Clause 7.3 & 26.10)

The materials UV specifications for the outer translucent dome and base for the K30 and K50 indicators are described in the UL yellow card material information refer to section 4.2.3 above.

Materials used for cementing
(IEC 60079-0:2011 Clause 12)

The enclosure does not use any material for cementing.

Entries into enclosure
(IEC 60079-0:2011 Clause 16)

The cable enters the indicator via the encapsulated base. Alternatively the indicators can be fitted with a socket that the cable plugs into.

Test of enclosures
(IEC 60079-0:2011 Clause 26.4)

Metallic enclosures, metallic parts of enclosure and glass parts of enclosure
(IEC 60079-11:2011 Clause 26.4.1.1)

The enclosures are made from non metallic material.

Non-metallic enclosures or non-metallic parts of enclosures
(IEC 60079-11:2011 Clause 26.4.1.2 & 26.7)

Refer to section 4.2.3 above.

Group II and Group III electrical equipment
(IEC 60079-11:2011 Clause 26.4.1.2.2)

Enclosure tests are generally excluded for intrinsically safe equipment. However tests were performed to meet the encapsulation ‘Exm’ standard. Refer to section 11.

© 2020 CSA Group. All rights reserved.

Resistance to impact
(IEC 60079-11:2011 Clause 26.4.2)

See report section 0

Drop test/assessment
(IEC 60079-11:2011 Clause 26.4.3)

The indicators are not portable therefore this test isn't required.

Thermal shock test
(IEC 60079-11:2011 Clause 26.5.2)

No glass parts used.

Ingress protection method and test (including gasket retention)
(IEC 60079-0:2011 Clause 26.4.5 & 6.5; IEC 60079-11:2011 Clause 6.1)

The circuits are completely encapsulated therefore dust has no access to any conducting parts.

Annex F
(IEC 60079-11:2011 Annex F)

This equipment has not been designed to meet Annex F.

Surface Temperature

See Section 0

Intrinsically safe apparatus and component temperature for Group III

The indicators are completely encapsulated to > IP6X. No further assessment is required.

National deviations

UL 60079-11:2013 Ed 6
Reference to the national differences of the UL equivalent standard UL 60079-11:2013 Ed6 against IEC 60079-11-2011Ed 6 shows that the differences cover many clauses that have no effect on this approval.

The clauses referenced are;

Clause 1 and Table 1
Clause 2 normative references.
Clause 3. Terms and definitions
Clause 4, Addition of North American grouping for Associated Apparatus.
Clause 5, The PELV and SELV specification replaced.
Clause 6, Modification and addition of notes.
Clause 7, Modification and replacement of notes.
Clause 10.7, Change to the wording in the last paragraph.
Clause 12.1, Marking general, paragraphs replaced
Annex F2, F3, replacement of some text.
Addition of new Annex DV1. Explanations for Exic.
The above clauses have no effect on this approval.

 © 2020 CSA Group. All rights reserved.

CAN/CSA-C22.2 No. 60079-11:11 Ed 1

Reference to the national differences of the CSA equivalent standard CAN/CSA-C22.2 No. 60079-11:06 Ed against IEC 60079-11-2011 shows that the differences include;
Clause 1. The scope
Clause 2. Normative references to CSA publications.
Clause 3. Terms and definitions
Clause 4, Addition of Canadian classifications.
Clause 5, The temperature class has been expanded
Clause 6.1, General requirements, A note change
Clause 16, Temperature at entries into enclosures require marking over 60°C under rated conditions.

The above differences don't affect the tests and assessments made to the IEC standard.

Clause 29: Marking, the marking symbols are different, and warnings to be shown in both English and French.
Clause 30, Instructions to be in both English and French

Assessment against C22.2 No. 213-M1987 (R2008) and ANSI/ISA-12.12.01-2012

Certification overview

Class I, Division 2 compliance.

The indicators are completely encapsulated and there are no sparking contacts to consider in the circuit. The only connection to be aware of is the plug and socket option for the cable. This is threaded and cannot be pulled apart.

Normally non-arcing devices
C22.2 No. 213-M1987 Clause 4.2, ANSI/ISA 12.12.01-2012 Clause 8

Connectors

Connectors and plug-in equipment used within the equipment are considered non-arcing as disconnection is not required under normal operation. The only connection to be aware of is the plug and socket option for the cable. This is threaded and cannot be pulled apart.

Fuses and fuse holders

A fuse is fitted on the circuit board but it is completely encapsulated and not replaceable.

Lamps and lamp holders

Not a lamp with a holder.

Circuit breakers

Not a circuit breaker.

Assessment against IEC 60079-26:2006

There are no additional requirements of IEC 60079-26:2006 to those addressed above.

© 2020 CSA Group. All rights reserved.

Any other standards to consider

None.

Assessment against IEC No. 60079-15:2010

Apparatus supply
(IEC 60079-15:2010 Clause 13)

The equipment has the following electrical parameters for the Non-Incendive option, Class I, II, Div 2, AEx nA:

Vmax =30 V
Imax = 25 mA

A 33V Zener diode is connected across each group of LEDs, and prevents the rated voltage being exceeded by more than 36.3V.

Input/output parameters

The input/supply parameters are:-

Vmax =30 V
Imax = 25 mA

Potential ignition sources
(IEC 60079-15:2010 Clause 4.2)

The cable plug and socket connection is the only potential source of ignition. However this is threaded and screwed into position and cannot be separated easily.

Spark ignition
(IEC 60079-15:2010 Clause 4.2)

There are no spark ignition sources in the equipment other than the connector mentioned above.

Temperature assessment
(IEC 60079-15:2010 Clause 5.1)

No specific external sources of heating or cooling were identified, but it is the installer's responsibility to ensure that the equipment remains within the ambient range.

Thermal ignition
(IEC 60079-15:2010 Clause 5.1)

The Indicator thermal assessments and tests have been conducted with the assessment to the Exm encapsulation standards IEC 60079-18, with faults taken into account, which don't apply to non-incendive equipment but give a much more onerous situation.

© 2020 CSA Group. All rights reserved.

Maximum external surface temperature

The worst case scenario has been conducted with the assessment to the Exm encapsulation standards IEC 60079-18, with faults taken into account, which don't apply to non-incendive equipment. Under these conditions power was applied to the equipment until the maximum surface temperature of 130°C was reached. Two ambient temperatures were considered 40°C and 50°C. Refer to report section 2.29.1.

Maximum internal surface temperature

The maximum temperature found on a component was 86°C in a50°C ambient temperature, with the maximum current limited by the 50mA fuse.

Service temperature of enclosure

The service temperature was found to be 78°C in a 50°C ambient temperature, in normal operation.

Enclosure
(IEC 60079-15:2010 Clause 6.1)

Non-Metallic Enclosures
(IEC 60079-0:2011 Clause 7.1)

The outer enclosure is made from two plastic parts. A translucent dome and an opaque base.

K30Land K50L translucent dome cover –Polycarbonate Bayer Makrolon 2407, drawing 133593.

The data for this material shows it to have an RTI value of 125, and has the f1 rating for UV resistance. A number of flammability ratings are shown on the data sheet, in particular UL 94.

K30L base PC Sabic Lexan 243, drawing 133592

The UL yellow card data for this material shows it to have an RTI value of 125, and has the f1 rating for UV resistance. A flammability rating is shown on the data sheet to UL 94.

K50L base PC Sabic Lexan 143R-701, black, drawing 162904.

The UL yellow card data for this material shows it to have an RTI value of 120, and has the f1 rating for UV resistance. A flammability rating is shown on the data sheet to UL 94.

Light alloy enclosures
(IEC 60079-0:2011 Clause 8)

Not applicable.

Ingress protection
(IEC 60079-15:2010 Clause 6.3)

The encapsulated assembly clearly meets IP64 ingress protection.

© 2020 CSA Group. All rights reserved.

Clearances, creepage distances and separations
(IEC 60079-15:2010 Clause 6.4)

This is low power apparatus meeting clause 13 of IEC 60079-15:2010.

Electric strength
(IEC 60079-15:2010 Clause 6.5)

Samples of the indicators were tested at 500V rms for at least 60 seconds and found to not breakdown, therefore meeting the requirements of this test. Refer to the test section 11 of this report.

Connection facilities and terminal compartments

General Requirements
(IEC 60079-15:2010 Clause 7.1)

The connection options are either via the integral cable or cable plug into the indicator socket, screwed into place.

Field wiring connections
(IEC 60079-15:2010 Clause 7.2)

No terminals are used in this equipment.

Connection for external conductors

No terminals are used in this equipment.

Internal connection facilities

There are no internal connectors.

Connection facilities for earthing and bonding conductors
(IEC 60079-0:2011 clause 15)

No earthing required for this equipment.

Factory connections

Field wiring connection methods used for factory connections
(IEC 60079-15:2010 Clause 7.3.2)

No terminals used

Permanent connections
(IEC 60079-15:2010 Clause 7.3.3)

Intergral cable encapsulated into the equipment is an option. The wire ends are soldered onto the board supported by the encapsulant.

© 2020 CSA Group. All rights reserved.

Pluggable connection
(IEC 60079-15:2010 Clause 7.3.5)

The option to have a socket in the base of the indicators permits the external cable to plug into the indicator. The plug and socket are threaded and screwed together preventing them being pulled apart.

Plugs and sockets
(IEC 60079-15:2010 clause 10)

The option to have a socket in the base of the indicators permits the external cable to plug into the indicator. The plug and socket are threaded and screwed together preventing them being pulled apart.

Plugs and sockets for external connections
(IEC 60079-15:2010 Clause 10.1)

The option to have a socket in the base of the indicators permits the external cable to plug into the indicator. The plug and socket are threaded and screwed together preventing them being pulled apart, and meet part b) of this clause, with the addition of a warning 'Do not separate when energised'.

Maintaining degree of protection
(IEC 60079-15:2010 Clause 10.2)

A special condition for safe use is applied to ensure that the ingress protection isn't compromised.

Sockets that do not have plugs inserted in normal operation
(IEC 60079-15:2010 Clause 10.3)

Not applicable.

Plugs and sockets for internal connections
(IEC 60079-15:2010 Clause 7.3.5)

None.

Supplementary requirements for non-sparking electrical machines
(IEC 60079-15:2010 Clause 8)

Not applicable.

Supplementary requirements for non-sparking fuses and fuse assemblies
(IEC 60079-15:2010 Clause 9)

Not applicable. The fuse is encapsulated.

Fuse type
(IEC 60079-15:2010 Clause 9.1)

Not applicable.

© 2020 CSA Group. All rights reserved.

Temperature assessment of fuse
(IEC 60079-15:2010 Clause 9.2)

Not applicable.

Fuse mounting
(IEC 60079-15:2010 Clause 9.3)

Not applicable.

Fuse enclosure
(IEC 60079-15:2010 Clause 9.4)

Not applicable.

Replacement fuse identification
(IEC 60079-15:2010 Clause 9.5)

The fuse is not replaceable.

Supplementary requirements for switchgear
(IEC 60079-15:2010 Clause 18)

Not applicable.

Supplementary requirements for non-sparking luminaires
(IEC 60079-15:2010 Clause 11)

Not applicable.

Supplementary requirements for non-sparking cells and batteries
(IEC 60079-15:2010 Clause 12)

Not applicable. No cells fitted.

Supplementary requirements for non-sparking low power apparatus
(IEC 60079-15:2010 Clause 13)

The equipment is low power, <20W, meeting IP54 ingress protection, with a Zener diode fitted across each group of LEDS provide transient protection not exceeding 140%, namely 30V supply protected by 33V, 10% zeners = 36.3V max. Ratio 6.3V/30V = 21%.

Supplementary requirements for non-sparking current transformers
(IEC 60079-15:2010 Clause 14)

Not applicable.

Other non-sparking electrical equipment
(IEC 60079-15:2010 Clause 15)

Not applicable.

© 2020 CSA Group. All rights reserved.

Supplementary requirements for enclosed break devices and non-incendive components
(IEC 60079-15:2010 Clause 17 & 22.4)

Not applicable.

Supplementary requirements for hermetically sealed devices
(IEC 60079-15:2010 Clause 18)

Not applicable.

Supplementary requirements for sealed or encapsulated devices
(IEC 60079-15:2010 Clause 19 & 22.5)

Although encapsulation is used it isn't required for safety as there are no sparking contacts in the circuit.

Supplementary requirements for restricted breathing enclosures
(IEC 60079-15:2010 clause 20)

Not applicable.

National deviations

UL 60079-15:2013 Ed 4
Reference to the national differences of the UL equivalent standard UL 60079-15:2013 against IEC 60079-15-2010 shows that the differences cover many clauses that have no affect on this approval.

The clauses that have some minor impact on the IEC approval are;

Clause 10, plugs and sockets for external connections. This has been expanded upon but doesn't affect the method of connection used in the plug and socket option for the indicators.

Clause 24, Marking. The examples of marking have changed to incorporate the AEx symbol.

None of the differences impact on the testing and assessments carried out in the above sections.

CAN/CSA-C22.2 No. 60079-15:12 Ed. 1

Reference to the national differences of the CSA equivalent standard CAN/CSA-C22.2 No. 60079-15:12 Ed 1 against IEC 60079-15-2010 shows that the differences include;
The scope
Normative references to CSA publications.
Clause 6.7.3: Addition of a note for conformal coating
Clause 17: Supplementary requirements for non sparking electrical machines
The above differences don't affect the tests and assessments made.

Clause 35: Marking, Note 1A added regarding marking with group II, and warnings to be shown in both English and French.

Assessment against IEC 60079-18:2009
General
(IEC 60079-18:2009 Clause 4)

© 2020 CSA Group. All rights reserved.

Level of protection

This equipment is being considered for level of protection Ex mb for the encapsulation assessments and tests.

Additional requirements for "ma"

Not Ex ma

Rated voltage and prospective short-circuit current

V max =30V

The maximum current is specified as being 25mA but the current is limited by the internal 50mA fuse.
Note: Fuse F1 is shown as 0.25A in the circuits for the intrinsically safe and non sparking versions and not relied upon for safety.

Requirements for compounds
(IEC 60079-18:2009 Clause 4)
General

The circuits and LEDs of the two indicator types, K30L and K50L, are completely encapsulated using Lord Corporation Thermoset 600 resin and 65 hardener. The encapsulant is not exposed to the environment as it is contained within a plastic base and a translucent dome. An integral cable is used to make the electrical connections.

Specification of the compound

The casting compound is defined on drawing 173494 in accordance with clause 5.2 as follows.

Requirement	Specification
Name and address of manufacturer	Lord Corporation of 111 Lord Drive, Cary, NC 27511 USA
Generic type	Thermoset
Type designation	600 Resin and 65 Hardener
Percentage fillers	None
Other additives	None
Mix ratio	100:50
Surface treatment	None
Pre-treatment for adhesion	None
Continuous operating temperature (COT) range	-40°C to 130°C
Colour	Clear, transparent

Water absorption

Three sample discs of the encapsulating material were tested for water absorption to clause 8.1.1 and it was found that the mass of the samples did not increase by more than 1%. Refer for section 11 for the test details.

Dielectric strength

A sample disc of the encapsulating material was dielectric strength tested at 130°C, in accordance with clause 8.1.2. No breakdown occurred during this test. Refer for section 11 for the test details.

© 2020 CSA Group. All rights reserved.

Temperature assessment
(IEC 60079-18:2009 Clause 5)

General

With the indicators operating normally the temperature of an encapsulated component was monitored and the service temperature determined. The highest temperature rise during this test was 35.8K (rounded up to 36K) in a K30L indicator when placed in an oven at 50°C. The temperature rise in a K50L sample was lower than this. The maximum service temperature for both the K50L and the K30L indicators is taken to be 86°C. The minimum service temperature is -40°C. Refer to test result section 11 of this report.

Determination of limiting temperature

Considering a fault scenario, the power to encapsulated components was increased until the surface temperature of the indicator reached 130°C when located inside an oven at 40°C and 50°C.

The worst case values were found on the K30L indicator as follows:-

The K30L surface reached 130°C when dissipating 2.8W in an ambient (oven) temperature of 50°C.
The K30L surface reached 130°C when dissipating 3.4W in an ambient (oven) temperature of 40°C.

The encapsulant showed no signs of damage after these tests. Refer to test result section 7.2.1 of the associated intrinsic safety report R26812A/00.

Further power limitation is provided by the internal 50mA fuse which at 30V limits the power to 2.55W, below the power levels of 2.8W and 3.4W used for the temperature rise tests.

Temperature limitation

The power input shown in 9.3.2 above is limited to ensure that a temperature class of T4 is not exceeded. This is a special condition for safe use.

Constructional requirements
(IEC 60079-18:2009 Clause 7)

General

At the service temperature of 86°C, the indicators were subjected to thermal endurance tests of 2 weeks at 95°C/90%RH, followed by 2 weeks in a dry oven at 106°C, followed by 24 hours at -45°C. At the conclusion of these tests the encapsulated indicators were inspected and found not to be visibly damaged. Refer to section 11 for the test information summary and results.

Determination of faults

With the maximum power limit applied as a simulated mass fault, see 9.3.2 above, which is well above the normal operating level, the encapsulant showed no signs of damage or discolouration. Also refer to section 2.29.1 for the mass fault detail.

Free space

There is no free space within the encapsulation and components.

© 2020 CSA Group. All rights reserved.

Thickness of the compound

The encapsulant is greater than 3mm thickness over all components for both the K30L and K50L indicators.

Switching contacts

There are no switching contacts in this equipment.

External connections

External connection to an electrical supply is made via an integral cable. The cable of each indicator was subjected to the cable pull tests of clause 8.2.5 and all passed this test. Refer to section 11 for the results summary.

Protection of bare live parts

There are no bare live parts outside of the encapsulant.

Cells and batteries

None.

Protective devices

The protective devices to limit current and power are located externally to the equipment, but a 50mA fuse is located on the encapsulated circuit board in case the limits are exceed due to a fault. The fuse has clearances of at least 0.5mm around it through the encapsulant, therefore meeting table 1 of IEC 60079-18.

Type tests
(IEC 60079-18:2009 Clause 8)

The type tests carried out are as follows:-
Temperature rise to determine the service temperature, 86°C.
Temperature rise to determine the surface temperature, 130°C
Thermal endurance to heat, 106°C, and cold, -40°C
Dielectric strength test of the indicators
Cable pull tests
Impact test, 4J for light transmitting parts
Water absorption
Dielectric strength of the encapsulation at 4kV and 130°C
Sealing test on the 50mA fuses
All of the tests were successful and are recorded in section 11 of this report.

Routine tests
(IEC 60079-18:2009 Clause 9)

A visual inspection of the completed indicators shall be carried to ensure that there is no discolouration or swelling or other signs of damage.

© 2020 CSA Group. All rights reserved.

National deviations

UL 60079-18:2012
Reference to the national differences of the UL equivalent standard UL 60079-18:2012 against IEC 60079-18-2009 shows that the differences include;
References to different UL standards, removal of Group I equipment, reference to Exmc, and rewording of some clauses. None of the differences impact on the testing and assessments carried out in the above sections.

CAN/CSA-C22.2 No. 60079-18:12 Ed. 1

Reference to the national differences of the CSA equivalent standard CAN/CSA-C22.2 No. 60079-18:12 Ed 1 against IEC 60079-18-2009 shows that the differences include;
References to different CSA standards.
The removal of reference to Exmc and Group I levels of protection, reference to equipment not mounted in an additional enclosure, and current limitation form lithium batteries. The differences don't affect the above tests and assessments.

Marking, warnings to be shown in both English and French.

Assessment against IEC 60079-31:2008 for dust protection

In meeting the requirements of EN/IEC 60079-18, protection by encapsulation, it is considered that the indicators meet the dust protection requirements of IEC 60079-31. All of the thermal and mechanical tests have been carried out successfully except for the internal 4kpa pressure test of clause 6.1.3 of IEC 60079-31:2008 which cannot be applied to the fully encapsulated indicators. The external surface temperature of the indicators will not exceed 135°C therefore can be awarded the code of Ex ta IIIC T135°C Da for zone 20, 21 or zone 22 use. The connector option requires a special condition for safe use to protect the connector when installed.

The Ex ta level of protection requires additional consideration against clause 4.2 of IEC 60079-31, thermal protection, against over temperature. It is considered that an additional thermal protective device isn't required because the 50mA fuse limits the power to a maximum of 2.55 W, refer to section 3.29.1. Testing has been carried out at power levels greater than this (2.8W and 3.4W) in the associated intrinsically safe versions, report R26812A/00, and integrity of the encapsulant wasn't compromised, nor the temperature class exceeded.

National deviation for CSA and North America

A national deviation affects clause 6.1.2. It requires that Ex tb and Ex tc protected equipment also be covered in as much dust as it can retain. The hemispherical shape of the indicators means that not much dust can be retained on the outer surfaces. However as a worst case the assessments below are considered more onerous.

During normal operation, measurements on the outside of the enclosure without dust on it gave a temperature rise of less than 36K, reference the test summary in section 9.3.1of this report. When referenced to an ambient temperature of 50°C the surface temperature is 86°C maximum.

However now that we have to consider a dust layer the surface temperature is likely to be higher. The equipment can potentially dissipate 2.55W of power, refer to report section 9.3.2.

Using Sira test data (test report 10/0020), where a resistor was completely covered under 500mm of dust and powered up at various power levels, the temperature rise was noted, see graph below;

© 2020 CSA Group. All rights reserved.

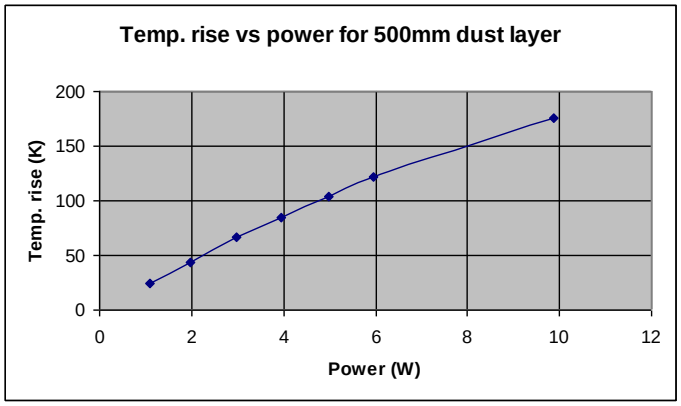

For our 2.55W of power a temperature rise of less than 60K is recorded. When referenced to an ambient temperature of 50°C this gives a maximum surface temperature of less than 135°C. This is considered to be a much more onerous test than using the amount of dust that could be retained by the indicator enclosures.

Samples and tests

Samples

Sample #	Date received	Description
1	28 June 2012	Unpotted K30L with connector
2 to 5	28 June 2012	Potted K30L's with connector
6	28 June 2012	Unpotted K30L with cable
7 to 10	28 June 2012	Potted K30L's with cable
11	28 June 2012	Unpotted K50L with connector
12 to 15	28 June 2012	Potted K50L's with connector
16	28 June 2012	Unpotted K50L with cable
17 to 20	28 June 2012	Potted K50L's with cable
21	16 Aug 2012	Potted K30L with thermocouples fitted
22 to 26	16 Aug 2012	Potted K30L's with cable
27 to 30	16 Aug 2012	4 discs of potting
31, 32	25 Oct 2012	Potted 0.5W resistors in K30L's with cable
33, 34	25 Oct 2012	Potted 1W resistors in K30L's with cable
35, 36	25 Oct 2012	Potted 0.5W resistors in K50L's with cable
37, 38	25 Oct 2012	Potted 1W resistors in K50L's with cable
39	13 Dec 2012	Potted K50L with thermocouples
40 to 43	13 Dec 2012	Potted K50L's with cable
44 to 47	13 Dec 2012	Potted K30L's with cable
48	13 Dec 2012	4 off K50L rubber washers
49	13 Dec 2012	4 off K30L rubber washers
50	13 Dec 2012	4 off K50L Locknuts
51	13 Dec 2012	4 off K30L Locknuts
52	28 Dec 2012	Potted K30L with thermocouples
53	30 May 2013	6 off Littelfuse 0242.050

Tests conducted by CSA/Sira

All tests were conducted by CSA/Sira Certification at Rake Lane, Eccleston, Chester, CH4 9JN, UK

© 2020 CSA Group. All rights reserved.

Service temperature rise test on non-metallic parts of the K30L enclosure

Sample tested:	Sample number #52, K30L encapsulated indicator with thermocouples fitted	
Test report # & date:	13/0039	04 Feb 2013
Standard reference:	IEC 60079-0:2011 clause 26.5.1	
Test procedure:	Thermocouples were affixed to components (deemed to get the hottest) prior to encapsulation. The Indicator was placed in an oven at 50°C (and 40°C), powered up and the temperature rise measured on the encapsulated components.	
Test result summary:	The maximum temperature rise measured was 35.8K; in a 50°C ambient =85.8°C rounded up to 86°C.	

Service temperature rise test on non-metallic parts of the K50L enclosure

Sample tested:	Sample number #39, K50L encapsulated indicator with thermocouples fitted	
Test report # & date:	13/0040	04 Feb 2013
Standard reference:	IEC 60079-0:2011 clause 26.5.1	
Test procedure:	Thermocouples were affixed to components (deemed to get the hottest) prior to encapsulation. The Indicator was placed in an oven at 50°C (and 40°C), powered up and the temperature rise measured on the encapsulated components.	
Test result summary:	The maximum temperature rise measured was 28K; in a 50°C ambient = 78°C.	

Thermal conditioning of non-metallic parts of the enclosure

Sample tested:	Two K30L Indicators samples nos. #44, #45, and two K50L Indicators, sample nos. #42, #43	
Test report # & date:	13/0074	April 2013
Standard reference:	IEC 60079-0:2011 clauses 26.8 and 26.9	
Test procedure:	The samples of indicators were thermally conditioned as follows: 95°C/90%RH for 14 days, followed by; 106°C in a dry oven for 14 days, followed by, 24 hours in a freezer at -45°C	
Test result summary:	At the end of the tests there were no obvious signs of damage, deformation or discolouration.	

Dielectric strength test

Sample tested:	Sample K30L #44 and K50L #42	
Test report # & date:	13/0208	26 March 2013
Standard reference:	IEC 60079-18:2009 clause 8.2.5	
Test procedure:	The thermally conditioned indicator under test was covered in foil and a test voltage of 500V rms was applied between circuits and outer, foil covered enclosure for at least 60 seconds.	
Test result summary:	All indicators tested passed this test	

© 2020 CSA Group. All rights reserved.

Impact test

Sample tested:	Two K30L Indicators samples nos. #44, #45, and two K50L Indicators, sample nos. #42, #43, all thermally conditioned
Test report # & date:	13/0210 | 11 April 2013
Standard reference:	IEC 60079-0:2011 clause 26.4.2
Test procedure:	The light transmitting part of the Indicators were impacted at 4J and the base was impacted at 7J, at the service temperatures of +86°C and -40°C.
Test result summary:	Some damage was incurred on the base but the protection afforded wasn't compromised.

Dielectric strength test of encapsulation material

Sample tested:	Sample #30, disc of encapsulant
Test report # & date:	12/0784 | 5th October 2012
Standard reference:	IEC 60079-18:2009 clause 8.1.2
Test procedure:	The disc of material was placed in the insulation tester and heated up in an oven to 130°C. A test voltage of 4kV was applied across the sample for 5 minutes.
Test result summary:	No flashover or breakdown occurred.

Water absorption test

Sample tested:	Three sample discs of material #27, #28, #29
Test report # & date:	12/0785 | 5th October 2012
Standard reference:	IEC 60079-18:2009 clause 8.1.1
Test procedure:	The mass of each disc was determined before placing them in water for 24 hours. At the end of the 24 hour period the discs were re-weighed.
Test result summary:	The increase in mass did not exceed 1% therefore passing the test.

Cable pull test

Sample tested:	Unconditioned and conditioned sample indicators with integral cable #46 and #47 K30L and K50L samples #40 and #41.
Test report # & date:	13/0209 | 26th March 2013
Standard reference:	IEC 60079-18:2009 clause 8.2.5
Test procedure:	The samples were weighed and the cable diameters measure to determine the pull test weight/force. Fifty times the mass of a sample gave a lower force than 20 times the cable diameter.
Test result summary:	After the 1 hour test period the samples were examined and no sign of damage or displacement was evident, therefore passing this test.

Sealing of fuse test

Sample tested:	Six of Littelfuse 0242.050
Test report # & date:	13/0447 | 09 July 2013
Standard reference:	Clause 8.2.8 of EN 60079-18:2009
Test procedure:	The sample fuses were placed in the water at the specified temperature of 65°C to a depth of 25mm.
Test result summary:	No bubbles were seen escaping from the fuses.

© 2020 CSA Group. All rights reserved.

Tests carried out by other organisations

None.

Tests waived

Test	Standard reference	Justification for waiving test
Enclosure 4kPa overpressure type test	IEC 60079-31:2008 clause 6.1.3	Due to the encapsulation completely filling the housing it is not feasible to apply a positive pressure internally to these indicators, the test was therefore waived.
IP6X	IEC 60529	Dust ingress protection. The encapsulation prevents any ingress of dust therefore this test was waived.

Assessment against Ordinary locations

CSA C22.2 no 142_M1987(R2009)

The clauses relevant to this equipment are listed in the table below;

Section Number	Section Title	Remarks / Comments	Verdict P = Pass
1.	Scope	Battery powered fixed equipment <750V	P
2.	Definitions	For information	P
3.	General Requirements		
3.1	General	C22.2 No. 0-10 has been considered in this report	P
3.2	Reference Publications	List of reference standards	P
4.	Construction		
4.1	Electrical Components and Equipment	Components assessed to haz loc standards and safety levels.	P
4.2	Enclosures		
4.2.1	General	Plastic enclosures have met thermal endurance to heat and cold and impact tests, recorded in this report.	P
4.2.2	Thickness of Sheet Metal Enclosures	Not metal	N/A
4.2.3	Thickness of Cast Enclosures	Not metal	N/A
4.2.4	Deleted		N/A
4.2.5	Covers of Enclosures	The two halves of the enclosure are bonded together and the internals encapsulated	P
4.2.6	Openings in Enclosures	No openings	N/A
4.2.7	Special-Purpose Enclosures	Not special purpose	N/A
4.2.8	Protection Against Rusting	Plastic enclosure	N/A
4.2.9	Polymeric Enclosures	Not protecting from electric shock or fire	N/A
4.3	Mechanical Assembly	Panel mounted indicators, not intended to be rotated.	P
4.4	Field Wiring	External connections via integral cable inside a panel	P
4.5	Wiring Terminal Parts and Leads	External connections via integral cable inside a panel	P
4.6	Current-Carrying Parts	External cable carries low current, no terminals in the equipment	P

© 2020 CSA Group. All rights reserved.

4.7	Equipment Wiring	No internal wiring	N/A
4.8	Electrical insulation	Plastic enclosure and circuits have been tested for dielectric strength in this report	P
4.9	Motors	Not a motor	N/A
4.10	Transformers	No transformers	N/A
4.11	Switches and Controls	Not a switch or control	N/A
4.12	Lighting Equipment	Not lighting	N/A
4.13	Fuses and Fuseholders	Not related to fuses	N/A
4.14	Spacings	No critical spacings, except for the fuse in Exm approval, section 9.3.2	P
4.15	Separation of Circuits	All circuits are within the encapsulation.	P
4.16	Grounding and Bonding	Not required	N/A
5.	Marking	Refer to marking section in the report	P
6.	Tests	Refer to test section 12 of this report	P
6.1	Sequence of Tests	Refer to test section 12 of this report	P
6.2	Test Conditions		
6.2.1	Voltage	Max DC voltage is 30V	P
6.2.2	Frequency	Not AC supplied	NA
6.3	Rating	An internal fuse will blow before the rating is exceeded.	P
6.4	Temperature	No fire risk. Refer to test section 12 of this report	P
6.5	Leakage Current	<30V	P
6.6	Overload - Internal Control Devices	No control devices	N/A
6.7	Endurance - Internal Control Devices	No control devices	N/A
6.8	Dielectric Strength	Refer to test section 12 of this report	P
6.9	Printed Circuit Board Coatings	None used	N/A
6.10	Impact	Not relied upon	N/A
6.10.1	Observation Openings	Not relied upon	N/A
6.10.2	Nonmetallic Enclosures	Not relied upon	N/A
6.10.3	Test Procedure	Not relied upon	N/A
6.11	Flammability of Polymeric Enclosures	Meets UL flammability requirements	P
6.12	Conduit Connections (Polymeric Enclosures)	No conduits used	N/A
6.13	Short Circuit	No transformers used	N/A
6.14	Flaming Oil (Perforated Panels)	No transformers used	N/A
6.15	Impedance	Bonding not required	N/A
6.16	Deflection - Enclosures	Not a metal enclosure	N/A
6.17	Deflection - Doors, Fronts, and Covers	Not a metal enclosure cover	N/A

© 2020 CSA Group. All rights reserved.

UL916 2007 R2010 Edition 4 Energy Management equipment

Section Number	Section Title	Comments / Remarks	Verdict P = Pass N/A or - = Not Applicable
1	Scope	Battery powered fixed equipment	P
2	General	All circuits are very low power using haz loc protection concepts	P
2.1	Components	All components are encapsulated inside a plastic enclosure	P
2.2	Units of measurement	S.I units	P
2.3	Undated references	Informative	
3	Glossary	Informative	
4	General	Informative	
5	Frame and Enclosure	Plastic enclosure inside is totally encapsulated	P
5.1	General	External supply, low power to meet haz loc concepts.	P
5.2	Covers	Cover/lid fixed bonded and held in place by encapsulant.	P
5.3	Transformers	None	N/A
5.4	Cast metal	Plastic enclosure	N/A
5.5	Sheet metal	Plastic enclosure	N/A
5.6	Nonmetallic	Plastic enclosure, tested for thermal endurance, impact and dust proof in this report. UL rated material	P
5.7	Windows	None	N/A
5.8	Raintight and rainproof enclosures	Meets IPX4, in this report	P
6	Openings in Enclosures	None	N/A
7	Mounting	Panel mounted	P
8	Mechanical Assembly	Not applicable	N/A
9	Operating Mechanism	No switches or solenoids used	N/A
10	Accessibility of Uninsulated Live Parts, Film-Coated Wire, and Moving Parts	Internals are low voltage and power limited to haz loc standards, and are not accessible. Enclosure internally encapsulated also meets > IP64.	P
11	Protection Against Corrosion	Plastic enclosure	N/A
12	Insulating Materials	No live parts.	N/A
13	Field Connections	Integral cable, connected in a panel	P
13.1	General	None	N/A
13.2	Equipment permanently connected electrically	Panel mounted indicators	N/A
13.3	Terminals	None	N/A
13.4	Outlet-box-mounted devices	None	N/A
13.5	Portable equipment	Not portable	N/A
13.6	Stationary equipment	External connections via integral cable	P
13.7	Polarity	External supply protected by diode across the supply line	P
13.8	Strain relief	Cable encapsulated into the enclosure of threaded plug and socket can be used.	N/A

© 2020 CSA Group. All rights reserved.

13.9	Bushings	None	N/A
14	Current-Carrying Parts	All parts are completely enclosed in the enclosure	N/A
15	Switches	No switches to consider	N/A
16	Internal Wiring	No Internal wires.	N/A
17	Grounding	None	N/A
18	Bonding of Internal Parts	Not needed	N/A
19	Motors	None	N/A
20	Printed Wiring Boards	Low volts, current and power to the PCBs presenting no fire or shock risk	P
21	Transformers	None	N/A
22	Capacitors	Low volts, current and power to the components presenting no fire or shock risk	P
22.1	General	Low volts, current and power to the components presenting no fire or shock risk	P
22.2	Signal coupling capacitors	None	N/A
23	Fuseholders	None	N/A
24	Overcurrent Protection, Control-Circuit Conductors	None	N/A
25	Overload Relays, Thermal Protectors for Motors, and Impedance-Protected Motors	None	N/A
26	Coil Windings	None	N/A
27	Spacings	No critically safe separations except for the fuse in the Ex m protected indicators	P
27.1	General	Not non controlled surge circuits	N/A
27.2	Line-voltage circuits	Line voltage not used	N/A
27.3	Magnet-coil windings	None used	N/A
27.4	Low-voltage class 2 circuits	Low volts, current and power to the circuits presenting no fire or shock risk	P
27.5	Isolated limited secondary circuits (100-volt-amperes or less)	Not isolated, and less than 1A	N/A
27.6	Controlled environment circuits	Dust tight encapsulated enclosure used.	P
28	Clearances and Creepage Distances	Meets Exm haz loc separations and the enclosure is dust tight.	P
29	Controlled-Environment Secondary Circuits	Dust tight enclosure used.	P
30	Wiring Space	No wires	N/A
31	Separation of Circuits	Circuits contained in one enclosure. The internal circuits have been assessed as being safe against haz loc standards.	P
32	Isolation Devices	None used	N/A
33	Connections to Separate Equipment	The indicators are connected to equipment providing a low supply of power.	P
33.1	General	The indicators are connected to equipment providing a low supply of power.	P
33.2	Fuel-control circuit	None	N/A

© 2020 CSA Group. All rights reserved.

33.3	Circulator or auxiliary-control circuit	None	N/A
34	Interconnection of Class 2 Circuits	No interconnections to any other equipment	N/A
35	Barriers	No partitions or barriers to consider	N/A
36	General	Low power Indicators, No risk to persons	P
37	Protection of Users and Service Personnel	Low volts, current and power to the circuits presenting no fire or shock risk to personnel	P
37.1	General	Low volts, current and power to the circuits presenting no fire or shock risk to personnel	P
37.2	Mechanical servicing	No mechanical function	N/A
37.3	Electrical servicing	No servicing by the user is permitted	N/A
38	General	Not energy management equipment	N/A
39	Power Input Test	Low power external input	P
40	Temperature Test	Low volts, current and power to the circuits presenting no fire or shock risk, refer to test section	P
41	Overvoltage and Undervoltage Tests	Less than 96V	N/A
42	Leakage Current Test	Hi pot tested refer to testing section	P
43	Leakage Current Test Following Humidity Conditioning	Hi pot tested refer to testing section	N/A
44	Normal Operation Test	No risk of fire or shock with low powered equipment	N/A
45	Abnormal Operation Test	No risk of fire or shock with low powered equipment	N/A
45.1	General	No risk of fire or shock with low powered equipment	N/A
45.2	Rectifier – capacitor combinations	Not a rectifier	N/A
45.3	Feedback sensing devices	No feedback sensing devices	N/A
45.4	Isolation devices	No isolation devices	N/A
46	Component Breakdown Test	No risk of fire or shock with this low powered equipment	N/A
46.1	Effects on equipment	No risk of fire or shock with this low powered equipment	N/A
46.2	Effects on controlled load	No risk of fire or shock with this low powered equipment	N/A
47	Overload Test	Not relevant	N/A
47.1	General	Not relevant	N/A
47.2	Tungsten-filament-lamp load characteristics	Not relevant, not a lamp	N/A
48	Endurance Test	Not relevant	N/A
49	Dielectric Voltage-Withstand Test	Hi pot tested refer to test section	P
49.1	General	30V, Hi pot tested refer to test section	P
49.2	Secondary circuits (controlled environment)	Not relevant, <30V	N/A
49.3	Power transformers	Not relevant, no transformers	N/A
49.4	Induced potential (crossover lead)	Not relevant	N/A
49.5	Induced potential repeated	No coils or windings to consider	N/A

© 2020 CSA Group. All rights reserved.

49.6	Dead-case-mounted semiconductors	No power switching components	N/A
50	Volt-Ampere Capacity	Not relevant , low powered <30V	N/A
51	Burnout Test	Not relevant, <30V and power limited	N/A
52	Limited Short-Circuit Test	Not relevant, <30V and power limited	N/A
53	Conductor Short-Circuit Test	Internal conductors are protected by a fuse	N/A
54	Strain Relief and Flexing Test	Cable subjected to a pull test for haz loc requirements	P
54.1	Strain relief	Cable subjected to a pull test for haz loc requirements	P
54.2	Flexing	No moving parts	N/A
55	Accelerated Aging Tests	Indicators subjected to thermal endurance testing	P
55.1	General	Sections 2.2 and test section	P
55.2	Gaskets	None used	N/A
55.3	Sealing compound	The inside of the enclosure is completely encapsulated. Tests to meet have been carried out.	N/A
55.4	Adhesives	None used	N/A
56	Metallic Coating Thickness Test	None used	N/A
57	Rain Test	Tested to IPX4, sections 2.5 and 6	P
58	Conduit Entries Strength Test	No conduit entries	N/A
59	Cover Retention Test	Cover held in place by encapsulant	P
60	Bonding Conductor Tests	No bonding required	N/A
61	Glass Window Impact Test	No windows	N/A
62	Permanence of Marking	CSA approved materials used	P
63	Component Evaluation	No risk of fire or shock with this low powered equipment	P
64	Isolating Resistor Evaluation	No safety resistors are used	N/A
65	Electronic Controls Requiring a Critical Component Evaluation	The circuits and components are designed to meet Haz Loc safety requirements.	P
66	Production-Line Dielectric Voltage-Withstand Test	<120V, no testing required	N/A
67	Production-Line Grounding-Continuity Test	No grounding circuits or connections to test	N/A
68	Rating Details	The equipment is 30V powered	N/A
69	Markings General	Refer to marking section	P
70	Wiring	No terminals to consider	N/A
71	Elevated Air Temperature	No terminals to consider	N/A
72	Cautionary Markings	Refer to marking section	P
73	Instructions	No shock risk at 30V	N/A
74	Accessory General	No accessories	N/A
75	Construction	No accessories	N/A
76	Performance	No accessories	N/A
77	Markings	No accessories	N/A
78	General	The plastic material meets UL requirements, refer to section 2.2 of this report	P

© 2020 CSA Group. All rights reserved.

79	Flammability of Enclosure – 5-Inch Flame	The plastic material meets UL requirements, refer to section 2.2 of this report	P
80	Thermal Aging	Tested OK, refer to sections 2 and test section	P
81	Exposure to Ultraviolet Light Test	The plastic material meets UL requirements, refer to section 2.2 of this report	P
82	Water Exposure and Immersion Test	Subjected to thermal endurance at high humidity and temperature, refer to sections 2 and test section	P
83	Volume Resistivity Test	No shock risk for low voltage equipment	N/A
84	Resistance to Hot-Wire Ignition Test	The plastic material meets UL requirements, refer to section 2.2 of this report	P
85	Heat-Deflection Temperature Test	The plastic material meets UL requirements, refer to section 2.2 of this report	P
86	Resistance to Impact Test	Impact tested at after thermal endurance, refer to sections 2 and test section	P
87	Resistance to Crushing Test	Not applicable	N/A
88	Mold-Stress Evaluation	The plastic material meets UL requirements, refer to section 2.2 of this report	P
89	Dielectric Strength Test	Not depended upon	N/A
90	Knockout Test	No knockouts	N/A
91	Abnormal Operation Test	Low power equipment	N/A
92	Resistance to Ignition Test	Low power equipment	N/A
93	Creep and Overcurrent Test	Low power equipment	N/A
App. A	Standards for Components	Low power equipment	N/A

Assessment against CAN/CSA-C22.2 N0. 0-M91 (R2001)

General Requirements- Canadian Electrical Code, Part II

		Yes	N/A	Comment/Assessment Report Reference
1	**Scope**			
2	**Definitions**			
3	**General Requirements**			
3.1	Compliance with Standards	P		Informative
3.2	Safety and Protection	P		Informative
3.3	Materials and Workmanship	P		Informative
3.4	Basis for Compliance	P		Informative
3.5	Reference Publications	P		Informative
3.6	Connection to telecoms		N/A	Informative
3.7	Cord connected	P		Informative
3.8	Line connected		N/A	Informative
4	Constructional Details			

© 2020 CSA Group. All rights reserved.

		Yes	N/A	Comment/Assessment Report Reference
4.1	Bases for the Mounting of Live Parts		N/A	Not live parts
4.2	Terminal Parts			
4.3	Size of Binding Screws		N/A	No terminals used
4.4	Material for Screws etc		N/A	None used
4.5	Terminal Plates and Threading		N/A	None used
4.6	Identification		N/A	No terminals to identify
4.7	Bonding and Grounding Conditions		N/A	Not required for this equipment
4.8	Switches and Overcurrent Protection in Identified and Grounding Conductors		N/A	Not required for this equipment
4.9	Polarization		N/A	No polarized receptacles required for safety
4.10	Over Surface and Through air spacings		N/A	Separations are through encapsulation
4.11	Protection and Enclosures	P		Enclosure internals are encapsulated
4.11.1	Bare live parts	P		Enclosure internals are encapsulated
4.11.2	Combustible	P		Meets UL plastics requirements
4.11.3	Injury	P		No risk to users
4.11.4	Outdoor equipment	P		Enclosure internals are encapsulated
4.11.5	Ferrous materials		N/A	Plastic enclosure.
4.11.6	Additional protection	P		Indicators are housed in panels protecting the integral cable.
4.12	Threaded Conduit Entries		N/A	No conduit entries
4.13	Boxes and Wiring Terminal Parts		N/A	Not a box
4.14	Wiring Connections	P		Cable is integral or plug and socket is fitted in the base of an indicator for the cable to connect to.
4.14.1	Connections	P		Soldered joints are completely encapsulated
4.14.2	Solderless		N/A	
4.14.3	Soldered	P		Soldered joints are completely encapsulated
4.14.4	Joins/splices		N/A	
4.14.5	Support	P		Soldered joints are completely encapsulated
4.14.6	Insulation ravelling		N/A	No wires to assess.
4.14.7	Conductor outer cover leakage		N/A	Not used
4.15	Rough Edges	P		No rough edges on the indicators
4.16	Supply Connections	P		Suitable cable is used for carrying <50mA
4.16.1	Supply connection method	P		Either integral cable or plug and socket used.
4.16.2	Current carrying	P		Suitable cable is used for carrying <50mA
4.16.3	Flexible cable	P		Suitable cable is used for carrying the normal current of <50mA
4.16.4	Terminals		N/A	None used.
4.16.5	Strain relief	P		Integral cable is encapsulated into the indicator, meets pull test, and is also panel located and protected.
4.16.6	Joints		N/A	No joints made
4.17	Provision for Clearance Holes for Conduit Connection		N/A	No conduit used.

© 2020 CSA Group. All rights reserved.

		Yes	N/A	Comment/Assessment Report Reference
4.18	Equipment for Mounting on or over Combustible Surfaces		N/A	Not to be mounted over combustible surfaces
5	Marking			
5.1	Marking Required	P		See marking section in the report
5.2	Double insulated Equipment		N/A	Not double insulated
5.3	Language Marking	P		Warnings marked in French also
6	Tests			
6.1	Voltage	P		Refer to test section in the report
6.1.1		P		Refer to test section in the report
6.1.2	ac		N/A	Not ac supplied
6.2	Temperature Determination			
6.2.1		P		Refer to test section in the report
6.3	Dielectric Strength			
6.3.1	Tests	P		Refer to test section in the report
6.3.2	Approved components assembly		N/A	
6.4	Test Requirements for a knockout/Multiple twistouts		N/A	
6.5	Leakage Current			
6.6	Cheesecloth		N/A	
Table 2				For information
Figure 1				For information
Figure 2				For information
Appendix A				For information
Appendix B				For information
Appendix C				For information

Assessment against CAN/CSA C22.2 No. 157-92 (R2009) Intrinsically safe and Non Incendive

CAN/CSA-C22.2 No. 157-92			
Clause	Requirement – Test	Result – Remark	Verdict
1	Scope		
2	Definitions		
3	General Requirements and Reference Publications		
3.1	General Requirements		
3.1.1		Equipment also complies with the relevant parts of CAN/CSA-C22.2 No. 0	Pass
3.1.2		Equipment also complies with the relevant parts of CAN/CSA-C22.2 No. 0	Pass
3.1.3		Supplied by I.S. barriers	Pass
3.1.4		Safe with faults taken into account	Pass
3.2	Reference Publications	The latest editions of standards are used	Pass
4	Constructional		
4.1	General		
4.1.1		No Non I.S. parts within the I.S. Indicators	Pass
4.1.2		No component approved parts used	NA

© 2020 CSA Group. All rights reserved.

CAN/CSA-C22.2 No. 157-92			
Clause	Requirement – Test	Result – Remark	Verdict
4.2	Enclosures		
4.2.1	General	Circuit completely enclosed and encapsulated	Pass
4.2.2	Class I, Division 1	Meets 2 fault safe assessments	Pass
4.2.3		Circuit completely enclosed and encapsulated	Pass
4.2.4	Class I, Division 2	The indicators are also suitable for Cl. I Div 2	Pass
4.2.5	Class II, Division 1	The indicators are also suitable for Cl.II Div 1	Pass
4.2.5.1		See C22.2 No. 25 report section	Pass
4.2.5.2		No exposed parts	Pass
4.2.6	Associated Equipment in Wet or Dusty Environments	Not associated equipment	NA
4.3	Protective Features		
4.3.1	General	Spacings not required for safety	Pass
4.3.2.1	Transformer	No transformers are used	NA
4.3.3	Damping Windings	None are used	NA
4.3.4	Current-Limiting Resistors		
4.3.4.1		None are used	NA
4.3.5	Shunt Safety Components		
4.3.5.1		None are used	NA
4.3.6	Blocking Capacitors	None are used	NA
4.3.7	Stand-Alone Shunt Diode Barrier Assemblies	None are used	NA
4.3.8	Non-Stand-Alone Shunt Diode Barrier Assemblies		
4.3.8.1		None are used	NA
4.3.9	Spacings	Spacings not required for safety	Pass
4.4	Component Parts		
4.4.1	General	No safety components are used	NA
4.4.2	Resistors and Semiconductors	No safety components are used	NA
4.4.3	Capacitors	No safety components are used	NA
4.4.4	Switches and Relays	No safety components are used	NA
4.4.5	Batteries	No batteries are used	NA
4.4.6	Non-incendive Components	None used	NA
5	Marking		
5.1	Permanence	Refer to report marking section	Pass
5.2	Minimum marking	Refer to report marking section	Pass
5.3	External	Non metallic label used	Pass
5.4	Ex mark	Marked as Exia	Pass
5.5	terminals	None used	NA
5.6	Battery powered	Not battery powered	NA
5.7	Fuses	Fuse is not replaceable	NA
6	Tests	Refer to report test section 18	Pass
6.1	General	Indicators have met the test requirements	Pass
6.2	Spark Ignition	Supplied from I.S. barrier	NA
6.3	Temperature Code Rating		
6.3.1	T rise tests	Refer to test section in this report, 130°C attained	Pass
6.3.2	Lab ambient	Test conducted in an oven, see test section	Pass
6.3.3		Being < 135°C they meet T4	Pass

© 2020 CSA Group. All rights reserved.

CAN/CSA-C22.2 No. 157-92			
Clause	Requirement – Test	Result – Remark	Verdict
6.3.4		No small component to assess as they are encapsulated	NA
6.4	Dielectric Strength		
6.4.1	Line-Connected Equipment	Not line connected	NA
6.4.2	Line-Connected Protective Transformers	No transformer to consider	NA
6.4.3	Other Protective Transformers	None	NA
6.5	Drop Test for Portable Equipment Operated by Non-intrinsically Safe Batteries		
6.5.1		Not portable	NA
6.6	Spark Ignition Test for Non-incendive Components		
6.6.1		None	NA
6.7	Thermal Ignition Test for Components	Not required as all components are encapsulated	NA
6.8	Temperature Test for Protective Transformers		
6.8.1		No transformers to consider	NA
6.9	Test for Sealed Components		
6.9.1		Fuse sealing tested to prevent encapsulant from entering it. Report sections 9.4.9, 9.5	Pass
6.9.2		No seals	NA
6.9.3		No seals	NA
6.9.4		Fuse is embedded in encapsulant	Pass
6.10	Tests for Shunt Diode Barrier Assemblies		
6.10.1		None	NA
6.11	Printed Circuit Board Coatings		
6.11.1	General	Coatings not used	NA
6.12	Adhesive Nameplates	CSA approved material used	Pass
6.13	Associated Apparatus - - Inductance and Capacitance Determination		
6.13.1		Not associated apparatus	NA
6.14	Intrinsically Safe Apparatus - - Inductance and Capacitance Determination	No internal L or C	NA
Table 1	Minimum Spacings Between Conductive parts Considered Not Subject to Breakdown	Informative	
Table 2	Temperature Code for Class I Hazardous Locations	Informative	
Table 3	Calibration Currents and Test Mixtures for Spark Ignition Test	Informative	
Table 4	Test Circuit for Spark Ignition Test	Informative	
Table 5	Minimum Spacings Between Different Intrinsically Safe Circuits at Field Wiring Terminals	Informative	

© 2020 CSA Group. All rights reserved.

CAN/CSA-C22.2 No. 157-92			
Clause	Requirement – Test	Result – Remark	Verdict
Table 6	Minimum Foil Thickness or Minimum Wire Diameter of the Shield in Relation to the Rated Current of the Fuse or Circuit Breaker	Informative	
Table 7	Marking Symbols	Informative	
Figure 1	Spark Test Apparatus	Informative	
Figure 2	Alternative Tungsten Electrode Configuration for spark Test Apparatus	Informative	
Figure 3	Resistance Circuits (L<5µH) Ignition Currents	Informative	
Figure 4	Resistance Circuits (L<5µH) Ignition Currents	Informative	
Figure 5	Inductance Circuits Ignition Currents at 24V	Informative	
Figure 6	Inductance Circuits Ignition Currents at 24V	Informative	
Figure 7	Inductance Circuits Ignition Currents for Various Voltages in Hydrogen	Informative	
Figure 8	Inductance Circuits Ignition Currents for Various Voltages in Methane	Informative	
Figure 9	Capacitance Circuits Ignition Voltage in Hydrogen	Informative	
Figure 10	Capacitance Circuits Ignition Voltage in Hydrogen	Informative	

Assessment against C22.2 No. 25 – 1966 (2009) for Class II dust approval

The Assessment against C22.2 No. 25 for enclosures for use in Class II, only covers metallic enclosures but in clause 3.2.1 where the material is referred to it indicates that the enclosure should be subject to special investigation.

Section Number	Section Title	Remarks / Comments	Verdict
1.	Scope		
2.	General Requirements.		
3	Construction		
3.1	General		
3.1.1		No certified component parts.	N/A
3.1.2		The enclosure is deemed substantial enough for the application.	Pass
3.2	Materials		

© 2020 CSA Group. All rights reserved.

3.2.1		The top part of the enclosure is Polycarbonate Sabic Lexan 121 or Polycarbonate Bayer Makrolon 2407. The bottom part is Polycarbonate Sabic Lexan 143R-701. The potting is Lord Thermoset specified in section 9.2.2 of this report The thermal conditioning and testing of this material completed for C22.2 60079-0 and 60079-31 are considered to cover the special investigation of this material.	Pass
3.2.2		Enclosure is not metal but is deemed suited to the purpose.	Pass
3.3	Seams		N/A
3.4	Joints	There are no joints within the spirit of this clause as all joints are just supplementary to the potting. The whole of the internal of the enclosure is potted providing	N/A
3.5	Openings for Shafts, Bolts, Studs, Screws and Pins		N/A
3.6	Inspection Windows		N/A
3.7	Cover Bolts		N/A
3.8	Conduit Hubs		N/A
4.	Marking		Pass
5.	Tests		
5.1	General		Pass
5.2	Dust-Tightness	The circuits are encapsulated and completely dust tight, ref section 2.5. An IP6X test cannot be carried out as there are no voids inside the enclosure due to the encapsulating material.	Pass
5.3	Temperature (Blanketing)	Refer to section 10 for dust blanketing assessment	Pass
5.4	Impact	Refer to section 11.2.5 for impact test	Pass
5.5	Flammability		
5.5.1		Enclosure materials meet UL94 flammability requirements. Refer to section 8.4.1	Pass
5.5.2		Enclosure materials meet UL94 flammability requirements. Refer to section 8.4.1	Pass
5.5.3		Enclosure materials meet UL94 flammability requirements. Refer to section 8.4.1	Pass

Assessment against UL 913 7th Edition

The Indicators have been considered against the Standards IEC 60079-0:2011 and IEC 60079-11:2011 for category Exia and gas group IIC in sections 2, 3 and 4 of this report therefore meeting the requirement of clause 5.5 of UL913 7th Edition.

The electrical components inside the indicators are completely encapsulated to >1mm. The indicators have been considered against ordinary location standards UL916. The indicators therefore meet the requirements of clause 6.2.3 of UL913 7th Edition for dust tightness.

Further tests have been carried against IEC 60079-18 for encapsulation in section 9 of this report.

© 2020 CSA Group. All rights reserved.

Assessment against UL1203 4th Edition

Part II Dust ignition proof, relevant clauses 35.1, 35.2, 43, 44, and 45

Clauses 35.1 and 35.2, enclosure. The non-metallic Indicator enclosures are filled with encapsulant and very rigid. Samples of the indicators have gone through thermal endurance tests and are completely dust tight. Refer to sections 9 and 11.2 of this report.

Clause 36. The inside of the indicator enclosures are completely encapsulated and the joint between the two parts are bonded together with no gaps and no way of being separated.

Clause 40. The indicators are primarily for mounting in panels. The K50L version does have an NPT thread for connection to conduit if required.

Clause 43, Dust penetration. The indicators are completely sealed with encapsulant.

Clause 44, Temperature test with dust blanket. Dust blanketing has been considered in sections 10 and 11.2 of this report.

Clause 45, Polymeric enclosure tests. Enclosure standard UL50 has been applied, ref 15.1 above. The indicators have been through thermal conditioning and impact tests, refer to sections 9 and 11.2 of this report. The enclosure and potting materials are specified in sections 8.4.1 and 9.2.2 respectively.

Assessment against ANSI/ISA-12.12.01-2012 Non incendive electrical equipment

The previous sections 5 and 8 in this report cover the non-incendive aspects of the indicators. The indicators are completely encapsulated with the only potential sparking issue being the cable connector when used as an option. The normal supply is 30V and 25mA which is non-incendive. Refer to sections 5 and 8 which cover Div 2, zone 2 assessments. All enclosure requirements are covered in report sections 8 and 9.

No further testing or assessment was deemed necessary.

© 2020 CSA Group. All rights reserved.

Edition 2 (Project 70030638)

The cover of the K30 and K50 lights used to be made of polycarbonate (Sabic Lexan) or polycarbonate (Bayer Makrolon) material as per drawings 133593 and 126905. This has been modified to have just Bayer Makrolon polycarbonate. This material is already approved in the previous assessment. Hence this change does not impact the assessment already carried out. Drawing 133593 has been replaced by 164905 to reflect this change for K30 lights and drawing 126905 has been replaced by 164906 to reflect this change for K50 lights.

The label drawing 171463 has been modified to update the CE number. This has no impact on the assessment.

Edition 3 (Project 70188876)

The maximum cable length that can be used with the versions of the LED Indicators that have the approvals for

Class I, Div. 1, Groups A, B, C and D; Class II, Div. 1, Groups E, F and G; Class III, Div. 1;
Class I Zone 0 AEx/Ex ia IIC T4 Ga; Class II Zone 20 AEx/Ex ta IIIC T130°C Da:

has been calculated as described below;

The maximum Intrinsically Safe supply parameters are Ui=30V and Ii=1A.
At 30V maximum, Table A.2 of IEC 60079-11:2011 permits a maximum capacitance of 66nF for Group IIC.

At 1A maximum the permitted maximum inductance, L, is calculated from $E=1/2.\ L.\ I^2$ where E=40µJ for Group IIC and I = 1.5 X 1A.
$L=2\ X40/1.5^2 = 80/2.25 = 35.55\mu H$

The maximum cable parameters specified on drawing 173292 are; 88pF/metre and 1.2µH/metre, using these values;

For capacitance max length = 66nF/88pF/m= 750 metres
For Inductance max length = 35.55µH/1.2µH/m = 29 metres

The maximum cable length has been restricted to 29 metres for the Div 1, AExia, Exia, Zone 0 versions of the LED Indicators, limited by the allowed inductance at a current of 1A.

The cable length for the other LEDs approved for Div 2, Zone 1 etc listed in the Products section on page 1 of this report, are not affected as the cable length isn't limited.

The ordinary locations assessments to CSA C22.2 no. 142 M1987(R2009) are not affected by this amendment.

© 2020 CSA Group. All rights reserved.

Edition 4 (Project 80051475)

1. FIR follow-up, update to report 2679646 for non-conformance issues noted in (FC# 150324) May 7, 2020, revised descriptive prints needed.
2. Encapsulation material mentioned in FIR was approved in Sira R70115581A, which also covers all mentioned drawing updates.
3. Update from C22.2 No. 142 to C22.2 No. 61010-1.
4. All required assessment deviations necessary to support the associated IECEx and ATEX Variations listed below are addressed under this project. A copy of these reports is held in the project folder for further information.
R70115581A, R70115798A, R70177521A, R70188875A and R70205810A
5. Additional letter included to the model to lessen confusion on models covered

Additional letter in the model number.
The differentiator in the model number that segments the non-hazardous from the hazardous is just after the "L" with "I", "M" and "N" designating the hazardous location models. In a standard product, the designation after the "L" indicates a color. It would minimize possible confusion by the user to make the additions.

Alternative encapsulation compound:

This alternative encapsulation compound was evaluated and tested under project 70115798. Result was documented in the CSA/SIRA report R70115798A, ExTR No.: GB/SIR/ExTR17.0132/00.
The new encapsulation is defined in specification:

Requirement	Specification for new encapsulant	Specification for the original encapsulant
Name and address of manufacturer	EFI Polymers, 4600 Holly Street, Denver, Colarado, 80216 USA	Lord Corporation of 111 Lord Drive, Cary, NC 27511 USA
Generic type	EFI Polymers	Thermoset
Type designation	Resin 20003 and Hardener 50127	600 Resin and 65 Hardener
Percentage fillers	None	None
Other additives	None	None
Mix ratio by weight	100:40	100:50
Surface treatment	None	None
Pre-treatment for adhesion	None	None
Continuous operating temperature (COT) range	-40°C to 130°C	-40°C to 130°C
Colour	Clear, translucent	Clear, translucent

The LED Indicators with the new encapsulant have been assessed and tested to verify that the new encapsulant doesn't compromise the safety case.

Tests conducted by Sira in the CSA/SIRA report R70115798A, ExTR No.: GB/SIR/ExTR17.0132/00 have been evaluated and accepted:

Service temperature rise test on non-metallic parts of a K30L indicator

Sample tested:	Sample number #1, K30L encapsulated indicator, under project 70009430	
Test report # & date:	15/0111	10 May 2015
Standard reference:	IEC 60079-0:2011 clause 26.5.1	

© 2020 CSA Group. All rights reserved.

Test procedure:	Thermocouples were affixed to components (deemed to get the hottest) prior to encapsulation. The Indicator was placed in an oven at 50°C, powered up and the temperature rise measured on the encapsulated components.
Test result summary:	The maximum temperature rise measured was 22.3K in a 50°C ambient = 73.2°C.

Thermal conditioning of the K50L LED Indicators

Sample tested:	Four K50L Indicators samples nos. #18 to #21, under project 70009430
Test report # & date:	15/0258 | 17 August 2015
Standard reference:	IEC 60079-0:2011 clauses 26.8 and 26.9
Test procedure:	The samples of the K50L indicators were thermally conditioned as follows: 73.2°C + 20K ±2K = 93.2°C ±2K round up to 95°C, and 90%RH for 28 days, followed by 24 hours in a freezer at -45°C
Test result summary:	At the end of the tests there were no obvious signs of damage, deformation or discolouration.

Thermal conditioning of K30L LED Indicators (repeat for K30L samples)

Sample tested:	Four K30L Indicators samples nos. #5 to 8 under project 70115798
Test report # & date:	17/0093 | April 2017
Standard reference:	IEC 60079-0:2011 clauses 26.8 and 26.9
Test procedure:	The samples of the K30L indicators were thermally conditioned as follows: 73.2°C + 20K ±2K = 93.2°C ±2K round up to 95°C, and 90%RH for 28 days, followed by 24 hours in a freezer at -45°C
Test result summary:	At the end of the tests there were no obvious signs of damage, deformation or discolouration.

Proof of potting and surface temperature

Sample tested:	Samples #2, #3 Encapsulated K30L indicators with resistors fitted, under project 70009430
Test report # & date:	15/0112 | 2 June 2015
Standard reference:	IEC 60079-11:2011 clause 6.6, IEC 60079-0:2011 clause 26.5.1.3
Test procedure:	The test sample indicators were located in a dry oven set for 40°C for one set of results and then repeated at 50°C for a second set of results. A resistor within the encapsulated indicator was powered up in increments of power until either a surface temperature of 130°C was attained or the resistors failed. The power dissipated was recorded.
Test result summary:	In a 40°C ambient the K30L samples reached 85.5°C when dissipating 4W of power. In a 50°C ambient the K30L sample reached 116.7°C when dissipating 3.5W of power, before failing.

Dielectric strength test

Sample tested:	#18, #10, under project 70009430
Test report # & date:	15/0257 | 17 August 2015
Standard reference:	IEC 60079-11:2011 clauses 6.3.13, 10.3 and IEC 60079-18:2009 clause 8.2.5
Test procedure:	A test voltage of 500V rms is to be applied between the circuits and the enclosure covered in conducting foil for at least 60 seconds.
Test result summary:	No breakdown was observed.

© 2020 CSA Group. All rights reserved.

Dielectric strength test of encapsulation material

Sample tested:	Sample #16a, disc of encapsulant, under project 70009430
Test report # & date:	15/0252 | 24 July 2015
Standard reference:	IEC 60079-18:2009 clause 8.1.2
Test procedure:	The disc of material was placed in the insulation tester and heated up in an oven to 130°C. A test voltage of 4kV was applied across the sample for 5 minutes.
Test result summary:	No flashover or breakdown occurred.

Water absorption test

Sample tested:	Three sample discs of material #16 b, c, d, under project 70009430
Test report # & date:	15/0251 | 12 August 2015
Standard reference:	IEC 60079-18:2009 clause 8.1.1
Test procedure:	The mass of each disc was determined before placing them in water for 24 hours. At the end of the 24 hour period the discs were re-weighed.
Test result summary:	The increase in mass did not exceed 1% therefore passing the test.

Cable pull test

Sample tested:	Unconditioned and conditioned sample indicators with integral cable #8, #10, #14, under project 70009430
Test report # & date:	15/0256 | 18 August 2015
Standard reference:	IEC 60079-18:2009 clause 8.2.5
Test procedure:	The samples were weighed and the cable diameters measure to determine the pull test weight/force. Fifty times the mass of a sample gave a lower force than 20 times the cable diameter.
Test result summary:	After the 1 hour test period the samples were examined and no sign of damage or displacement was evident, therefore passing this test.

Impact test K50L Indicators

Sample tested:	K50L Indicators samples nos. #18 to 21, thermally conditioned, under project 70009430
Test report # & date:	15/0259 | 26 August 2015
Standard reference:	IEC 60079-0:2011 clause 26.4.2
Test procedure:	The light transmitting part of the Indicators were impacted at 4J and the base was impacted at 7J, at the service temperatures of +73.2°C and -40°C.
Test result summary:	The K50L samples remained intact

Impact test K30L Indicators (redone under new project 70115798)

Sample tested:	K30L Indicators samples nos. 5 to 8, thermally conditioned
Test report # & date:	17/0093 | 2017
Standard reference:	IEC 60079-0:2011 clause 26.4.2
Test procedure:	The light transmitting part of the Indicators were impacted at 4J at the service temperatures of +73.2°C and -40°C.

© 2020 CSA Group. All rights reserved.

Test result summary:	There was minor cracking observed on the K30L dome, but it was assessed by observation that this would not invalidate the protection concepts. To additionally verify that the protection was not invalidated, a dielectric strength test (500V ac) was conducted on the samples 7 and 8 in accordance with clause 6.3.13 of IEC 60079-11:2011 under water (Sira test report 17/ 0249, dated May 2017), and there was no flashover. NOTE: The base was impacted with a low impact energy of 4J. There was no damage to the sample, except to the label. It was however assessed that that due to how the equipment is intended to be installed, it would not be possible for the base to be subject to any impact.

The above test requirements are similar between IEC and CSA/UL standards and there are no additional requirements for C/US approval. Therefore, the above test results are acceptable for this project.

Updated drawings:

Drawing #	Old Rev	New Rev	Description of updates	Approved by earlier RR*
08249	H	I	ECO 501890: Added PN 190299 MATERIAL PC SABIC LEXAN 144R COLOR: GRAY GY6G451F to table 1 for FDA approved models. Remarks: This addition did not affect Ex/HazLoc construction.	R70115581A Section 3 Table
08249	I	J	ECO CD1266: Added p/n 203163 to table 1 for FDA approved models, re-numbered notes, added inspection dimensions Remarks: The addition did not affect Ex/HazLoc construction and the added dimensions allowed for a better incoming inspection process.	R70177521A Section 3.2.1
08249	J	K	ECO 402405: Adding a Note#13 to drawing which states that P/N 203163 must meet a minimum Torque requirement of 30 FT-LB. Remarks: This note did not affect Ex/HazLoc construction (FDA models only).	R70177521A Section 3.2.1
133592	D	E	ECO 501834: Added PN 185398 to table 2; PN 185398 will be material PC SABIC LEXAN 144R COLOR: 703 (GRAY) for FDA approved models; and adding table 3 for features to be inserted. Remarks: This addition did not affect Ex/HazLoc construction.	R70115581A Remarks: Per Form 9124 submitted 2016-12-28, Rev E, F and G were included in the update to Rev H, which was approved (the earlier changes did not affect Ex/HazLoc models).

© 2020 CSA Group. All rights reserved.

Drawing #	Old Rev	New Rev	Description of updates	Approved by earlier RR*
133592	E	F	ECO 501920: Updated changing the material color on the respective K50 + K30 bases from 703 GREY to GY6G451F (GRAY). Remarks: This did not affect Ex/HazLoc construction (FDA models only).	R70115581A
133592	F	G	ECO 312911: In drawing 133592: Changed DN 17 from: 3.95 to 4.04 to correct a manufacturing issue. Remarks: This was a minor dimensional change.	R70115581A
133592	G	H	ECO 502285: We are adding PNs 197246 and 198090 to the print; they are being added to Table 3. Remarks: This addition did not affect Ex/HazLoc construction	R70115581A Section 3 Table
133592	H	I	ECO CD1266: ADDED P/N 203160 TO TABLES 2&3; Remarks: This addition did not affect Ex/HazLoc construction	R70177521A Section 3.2.2
133592	I	J	ECO 402446: Adding minimum torque requirement on threads to take the place of no-go thread gage specifically for p/n 203160. Also adding deviation table for two dimensions, also just for p/n 203160. Remarks: This addition did not affect Ex/HazLoc construction	R70205810A Section 3.1
133592	J	K	ECO 502939: making the following updates: - Adding PNs 213077 + 214933 to the drawing and tables - Removing PNs 197246, 198090 + 185398 from tables 2 and 3 - Removing special drawing images on sheet 2 for PNs 197246 + 198090. Remarks: This addition did not affect Ex/HazLoc construction	R70177521A section 3.2.2
133594	A	B	ECO 501890: Created table 2 and adding PN 190298 MATERIAL PC SABIC LEXAN 144R COLOR: GRAY GY6G451F to the table. Remarks: This addition did not affect Ex/HazLoc construction	R70115581A Section 3 table
133594	B	C	ECO CD1266: Added p/n 203163 to table 1 for FDA approved models, re-numbered notes, added inspection dimensions Remarks: The addition did not affect Ex/HazLoc construction and the added dimensions allowed for a better incoming inspection process.	R70177521A section 3.2.3
133594	C	D	ECO 402445: Adding minimum torque requirement on threads to take the place of no-go thread gage specifically for P/N 203161. Also adding deviation table for two dimensions, also just for P/N 203161 Remarks: This note did not affect Ex/HazLoc construction (FDA models only).	R70205810A Section 3.2
158033	A	B	Revised design	R70115581A
158033	B	C	F1 was 1amp (currently 0.25A)	R70115581A
158033	C	D	Added to table P/N 169099, 169100, 169101, 169102, 169103, 169104, 169105	R70115581A
158033	D	E	Revised table, adding omitted Parts A&B, On PCB assy P/N169009 - 169105, deleted unneeded parts as designated by table	R70115581A
158033	E	F	Added "Agency Approval Notes"	R70115581A
158033	F	G	Update P/N 158033 to revision K to add model variation 185742 (Gn/Rd/Wh)	R70115581A
158033	G	H	Update P/N 158033 to revision K to add model variation 196555 (ye/Rd/X)	R70115581A
158033	H	I	Update P/N 158033 to revision K to add model variant 196752 (Bl/Wh/X)	R70115581A

© 2020 CSA Group. All rights reserved.

Drawing #	Old Rev	New Rev	Description of updates	Approved by earlier RR*
158033	I	J	Update P/N 158033 to revision K to add model variation 213013 (Ye/Bl/X)	R70115581A
158033	J	K	Update P/N 158033 to revision K to add model variation 219242 (Wh/Bl/Ye)	R70115581A
158252	A	B	Description of Change: Revised design	R70115581A
158252	B	C	Description of Change: F1 was 1amp (currently 0.25A)	R70115581A
158252	C	D	Description of Change: Added to table P/N 169108, 169109, 169110, 169111, 169112, 169113, 169114	R70115581A
158252	D	E	Description of Change: Revised table, adding omitted Parts A&B, On PCB assy P/N 169108 - 169114, deleted unneeded parts as designated by table	R70115581A
158252	E	F	Description of Change: Added "Agency Approval Notes"	R70115581A
158252	F	G	Description of Change: Update P/N 158252 to revision K to add model variation 189753 (Gn/Ye/Bl)	R70115581A
158252	G	H	Description of Change: Update P/N 158252 to revision K to add model variation 207292 (Ye/Bl/X)	R70115581A
158252	H	I	Description of Change: Update P/N 158252 to revision K to add model variant 209462 (Rd/Bl/X)	R70115581A
158252	I	J	Description of Change: Update P/N 158252 to revision K to add model variation 210032 (Wh/YeX). Remarks: Adding model with different color/illumination combination. This change did not affect Ex/HazLoc construction.	
162904	C	D	ECO 113044A & B: Changed Note 2, Finish from "SPI-D1" to "SPI-D3". Remarks: the change in finish was cosmetic and improved manufacturability of the part.	R70115581A Section 3 table
164905	B	C	ECO 312860: Added material: PN 196084 PLASTIC MATERIAL RAW PC COVESTRO MAKROLON 2407 COLOR 021069 UV SPECIAL DIFFUSING. Remarks: This note did not affect Ex/HazLoc construction	R70115581A Section 3 table
164906	F	G	Revising drawings and updating BOMs in Oracle to add COVESTRO material.	R70177521A R70115581A
164906	G	H	The following K50 covers are being revised to Rev. H: - PN 194906 COVER K50 INTRINSICALLY SAFE EZ LIGHT 2ND GEN - PN 197918 COVER K50 FDA EZ LIGHT 2ND GEN Tabulated drawing PN 194906 is being updated to add Table 1 that includes different materials and part numbers.	R70177521A
164906	H	I	Update prints 164906 & 196742 to add new PN and material	R70115581A
164906	I	J	Update the process dimensions and add inspection dimensions: - 164906 COVER K50 INTRINSICALLY SAFE EZ LIGHT 2ND GEN - 197918 COVER K50 FDA EZ LIGHT 2ND GEN - 203460 COVER K50 FDA EZ LIGHT GEN 3	R70177521A
168051	B	C	Potting changes for K50L and K30L models.	R70115798A

© 2020 CSA Group. All rights reserved.

Drawing #	Old Rev	New Rev	Description of updates	Approved by earlier RR*
168051	C	D	Update P/N 127246 - Deleted "DISPENSE POTTING UNTIL IT IS VISIBLE IN POTTING HOLES" and replaced with "- DISPENSE POTTING PER SPECIFIED VOLUME IN TABLE 2	R70115798A
169013	B	C	Update Wire Gage from 24 to 26 gage	N/A
169014	B	C	169014 ECO History 2020-09-16" includes the revision information for rev D	R70115798A
169014	C	D	Update P/N 127246 - Deleted "DISPENSE POTTING UNTIL IT IS VISIBLE IN POTTING HOLES" and replaced with "- DISPENSE POTTING PER SPECIFIED VOLUME IN TABLE 2 - MANUALLY DISPENSE ADDITIONAL POTTING AS NEEDED TO ACHIEVE THE LEVEL DEFINED IN DETAIL A". Deleted "SHOT VOLUME 30.5 mL" from table 1. Added table 2. Update P/N 144692 - Changed shot volume for 83438 from "32 mL" to "27 mL" Update P/N 159880 - Changed table 1 shot volume from "33 ml" to "25.1 + MANUAL" for 86405 and changed shot volume for all others from "33 ml" to " 33.0 +MANUAL" Update P/N 209618 - Changed Table 1 shot volume for 12798 from "29 mL" to "27.0 + MANUAL" Changed all other to "29.0 + MANUAL" Update P/N 127244 - Added shot volumes for specific parts to table Update P/N 169014 - Remove shot volume 1, shot size 1 reference, and shot 2 from table 2. Added Table 3 Update P/N 125252 - Added table 2 indicating specific shot volumes for specific parts. Took shot volume out of table 1. Update P/N 127245 - Added table 2 indicating specific shot volumes for specific parts. Took shot volume out of table 1. Added ", SEE TABLE 2" after "DISPENSE FIRST SHOT". Update P/N 159881 - Deleted "DISPENSE POTTING UNTIL IT IS VISIBLE IN POTTING HOLES" and replaced with "- DISPENSE POTTING PER SPECIFIED VOLUME IN TABLE 2 - MANUALLY DISPENSE ADDITIONAL POTTING AS NEEDED TO ACHIEVE THE LEVEL DEFINED IN DETAIL A". Deleted "SHOT VOLUME 33 mL" from table 1. Added table 2. Update P/N 168051 - Deleted shot size references from tables 1 and 2. Deleted shot volume 1 and 2 from table 2. Added table 3	R70115798A
169015	B	C	Update P/N 169015 PROC POTTING K30L HAZARDOUS ENVIRONMENTS FINAL ASSY to Revision C. Figure 1 - Add Note with 1. & 2. Add Second Fill info Table 1 - Update Table to reflect First & Second Fill	R70205810A R70115798A R70115581A
169015	C	D	Potting changes for K50L and K30L models.	R70205810A R70115798A R70115581A

© 2020 CSA Group. All rights reserved.

Drawing #	Old Rev	New Rev	Description of updates	Approved by earlier RR*
169015	D	E	Add note "DO NOT GET ANY POTTING ON TOP FLAT SURFACE"	R70205810A R70115798A R70115581A
171656	B	C	Update INTRINSICALLY SAFE labels	R26812B/01
171657	B	C	Update INTRINSICALLY SAFE labels	R26812B/01
171982	B	C	P/N 171982 LIT K30/K50 HAZARDOUS AREA EXMB INSTALLATION GUIDE has been revised to a "C" revision. Description of change: UL requires that we add Required Overcurrent Protection information to all UL 508 certified products. 171982: Added Required Overcurrent Protection and C-UL-US logo	For NA evaluated and accepted
171982	C	D	PN 171982 LIT K30/K50 HAZARDOUS AREA EXMB INSTALLATION GUIDE - to Rev. D	For NA evaluated and accepted
171982	D	E	MODEL LIST SHOWS INCORRECT MODEL NUMBER IN LINE 8	For NA evaluated and accepted
171982	E	F	Update Agency NB number per Brexit on 171982 and 172445. Reason for Change: FM Approval's identification number changed due to office moving because of Brexit	For NA evaluated and accepted
171983	B	C	PN 171983 LIT K30/K50 HAZARDOUS AREA EXNA INSTALLATION GUIDE - to Rev. C	For NA evaluated and accepted
172445	B	C	PN 172445 LIT K30/K50 INTRINSICALLY SAFE INSTALLATION GUIDE- ATEX CSA C/US AND IECEx - to Rev. C	For NA evaluated and accepted
172445	C	D	Update Agency NB number per Brexit on 171982 and 172445. Reason for Change: FM Approval's identification number changed due to office moving because of Brexit.	For NA evaluated and accepted
172719	A	B	Add model variant 205676 (RD/Ye/X)	R70205810A
172728	A	B	Update notes; add solid base copper area on side 1 of panel; add copper balancing on panel perimeter all layers.	R70205810A
172729	A	B	Update P/N 172729 to revision B to add model variant 189395 (Gn/Rd/Wh)	R70205810A R70177521A R70115581A
172729	B	C	Update P/N 172729 to revision B to add model variant 195330 (Wh/Ye/Rd)	R70205810A R70177521A R70115581A
172729	C	D	Update P/N 172729 to revision B to add model variant 204056 (Rd/Ye/X)	R70205810A R70177521A R70115581A
172729	D	E	Update P/N 172729 to revision B to add model variant 209465 (Bl/Rd/Ye)	R70205810A R70177521A R70115581A
172927	B	C	Update Wire Gage from 24 to 26 gage	For NA evaluated and accepted

© 2020 CSA Group. All rights reserved.

Drawing #	Old Rev	New Rev	Description of updates	Approved by earlier RR*
173292	B	C	Addin P/N's 40503, 40521 to table	For NA evaluated and accepted

Deleted drawings:

Drawing #	Reason
171463	Remove duplicate entries.
171656	Remove duplicate entries.
171657	Remove duplicate entries.

Construction Review:

Changes accepted in this edition does not jeopardise compliance to applicable standards requirements tested and analysed in previous additions.

Relevant Clauses Affected by the Modifications

CSA/UL 60079-0			
Clause	Requirement – Test	Result – Remark	Verdict
5.3	Surface temperature	Didn't exceed 135°C in 50°C ambient	Pass
26.5.1	Service temperature	72.3°C in a 50°C ambient	Pass
26.8, 26.9	Thermal conditioning	At least 93°C/90%RH.	Pass
26.4.2	Impact test	4J on light transmitting parts.	Pass

CSA/UL 60079-11			
Clause	Requirement – Test	Result – Remark	Verdict
6.6	Proof of potting	See section 3.1.1.2 Report R70115798A	Pass
6.3.13,10.3	Dielectric strength test	See section 3.1.1.8 Report R70115798A	Pass

CSA/UL 60079-15			
Clause	Requirement – Test	Result – Remark	Verdict
5.1	Maximum surface temperature	See section 3.1.1.2 Report R70115798A	Pass
22.3, 22.5	Conditioning tests	See section 3.1.1.4 Report R70115798A	Pass

CSA/UL 60079-18			
Clause	Requirement – Test	Result – Remark	Verdict
8.2.4	500V Dielectric strength test	See section 4.2.4 Report R70115798A	Pass
8.1.2	Dielectric strength of encapsulation material	See section 3.1.1.8 Report R70115798A	Pass
8.1.1	Water absorption test	See section 3.1.1.7 Report R70115798A	Pass

© 2020 CSA Group. All rights reserved.

CSA/UL 60079-18			
Clause	Requirement – Test	Result – Remark	Verdict
8.2.5	Cable pull test	See section 3.1.1.6 Report R70115798A	Pass

CSA/UL 60079-31			
Clause	Requirement – Test	Result – Remark	Verdict
4.4.1	Surface temperature	See section 3.1.1.2 Report R70115798A	Pass

C22.2 No. 61010-1:2012 (2018) and UL 61010 3d edition

IEC 61010-1			
Clause	Requirement + Test	Result - Remark	Verdict
4	TESTS	See CSA test report 2679646, project 80051475 All aspects fulfilled	P
4.4	Testing in SINGLE FAULT CONDITIONS	Analyze of the product and result of testing and evaluation from the CSA test report 2679646 for compliance with CSA/UL 60079-0: and CSA/UL 60079-11 standards, show that product do not capable to produce HAZARDS to the OPERATOR and the surrounding area outlined in close 1.2 of CSA/UL 61010 in normal and single fault condition. Testing performed in the report 2679646 are acceptable.	P
5	MARKING AND DOCUMENTATION		
5.1.1	Required equipment markings	Marking required in test report 2679646 are satisfied current standards requirement.	P
6	PROTECTION AGAINST ELECTRIC SHOCK		P
6.1	General	All product electrical parameters are below the requirements of current standard. Transient protection is incorporated in the design and evaluated under CSA test report 2679646, project 80051475 No shock hazard exists.	P

© 2020 CSA Group. All rights reserved.

IEC 61010-1			
Clause	Requirement + Test	Result - Remark	Verdict
7	PROTECTION AGAINST MECHANICAL HAZARDS		
7.1	Equipment does not cause a mechanical HAZARD in NORMAL nor in SINGLE FAULT CONDITION	Product is low weight, low power equipment, required to installed into an enclosure made from UL rated plastics and could not cause a mechanical hazard in normal nor in single fault condition.	P
7.2	Sharp edges	Equipment was examined for accessible sharp edges.	P
7.3	Moving parts	No such parts	N/A
8	RESISTANCE TO MECHANICAL STRESSES		
8.1	Equipment does not cause a HAZARD when subjected to mechanical stresses in NORMAL USE	Product complies with requirements of CSA/UL 60079-0. Low voltage, low power encapsulated within a plastic housing device cannot meet or exceed the failure criteria	P
9	PROTECTION AGAINST THE SPREAD OF FIRE		
9.1	No spread of fire in NORMAL and SINGLE FAULT CONDITION	Low voltage, low power encapsulated within a plastic housing device cannot meet or exceed the failure criteria. Protected by approved fuse.	P
10	EQUIPMENT TEMPERATURE LIMITS AND RESISTANCE TO HEAT		
10.1	Surface temperature limits for protection against burns	Testing and Evaluation accepted from previous editions. The maximum temperature rise measured on the enclosure was 35.8K; in a 50°C ambient =85.8°C rounded up to 86°C	P
11	PROTECTION AGAINST HAZARDS FROM FLUIDS		
11.1	Protection to OPERATORS and surrounding area provided by EQUIPMENT	Not present	N/A
12	PROTECTION AGAINST RADIATION, INCLUDING LASER SOURCES, AND AGAINST SONIC AND ULTRASONIC PRESSURE		

© 2020 CSA Group. All rights reserved.

IEC 61010-1			
Clause	Requirement + Test	Result - Remark	Verdict
12.1	Equipment provides protection	Not present	N/A
13	PROTECTION AGAINST LIBERATED GASES AND SUBSTANCES, EXPLOSION AND IMPLOSION		
13.1	Poisonous and injurious gases and substances	No poisonous and injurious gases and substances	N/A
14	COMPONENTS AND SUBASSEMBLIES		
14.1	Where safety is involved, components and subassemblies meet relevant requirements	Approved fuse and PCB	P
15	PROTECTION BY INTERLOCKS		
15.1	Interlocks are designed to remove a HAZARD before OPERATOR exposed	Not present	N/A
16	HAZARDS RESULTING FROM APPLICATION		P
16.1	REASONABLY FORESEEABLE MISUSE	No hazards in a reasonably foreseeable misuse situation possible	N/A
17	RISK ASSESSMENT		
	RISK assessment conducted, if HAZARD might arise and not covered by Clauses 6 to 16	All hazards addressed in assessment	NA
ANNEX F	ROUTINE TESTS		NA
	Manufacturer ´s declaration	Dielectric strength requirement is addressed by evaluation to UL/CSA 60079-0 and 60079-11	NA
ANNEX H	QUALIFICATION OF CONFORMAL COATINGS FOR PROTECTION AGAINST POLLUTION		
H.1	General	Equipment does not use conformal coating to protect against pollution. Equipment is entirely non-hazardous live and does not require	NA
ANNEX K	INSULATION REQUIREMENTS NOT COVERED BY CLAUSE 6.7	All insulation requirements not covered by clause 6.7	N/A

© 2020 CSA Group. All rights reserved.

Construction review performed with satisfactory results.
National deviation list stored in engineering file

This Edition supersedes all previous editions.

---End of Report---

© 2020 CSA Group. All rights reserved.