Q2XKLAF Laser Measurement Sensor

Original Instructions
p/n: 229259 Rev. D
24-Feb-26
© Banner Engineering Corp. All rights reserved. www.bannerengineering.com

ПРОМЭЛЕКТРОНИКА/ sales@prom-elec.com

Contents

Chapter 1 Features 3
- Models 3
- Specifications 3
  - Class 1 Laser Description and Safety Information 4
  - FCC Part 15 Class B for Unintentional Radiators 5
  - Industry Canada ICES-003(B) 5
  - Dimensions 6
  - Performance Curves 7

Chapter 2 Installation 10
- Overview 10
- Mount the Device 10
- Wiring 10

Chapter 3 Configuration Instructions 12
- Select the TEACH Mode 12
- TEACH Button Overview 12
- Remote Input Wire Menu 13
- TEACH Procedures 14
  - TEACH the Sensor Using Two-Point Static Background Suppression 14
  - TEACH the Sensor Using One-Point Object SET 15
  - TEACH the Sensor Using One-Point Window SET (Foreground Suppression) 16
  - TEACH the Sensor Using One-Point Dual Mode (Intensity + Distance) 17
  - Cancel the TEACH Process 17
  - Change the Response Speed 17
- Select Light Operate or Dark Operate 18
- Lock and Unlock the Button 19
- Pulse Frequency Modulation (PFM) 19
  - Enable the PFM Output 19
  - Disable the PFM Output 19

Chapter 4 IO-Link Interface 20
- IO-Link Parameters for Q2XKLAF Models 20
  - IO-Link Process Data In (Device to Master) for the Q2XKLAF 21
  - IO-Link Process Data Out (Master to Device) for the Q2XKLAF Models 23
  - Parameters Set Using IO-Link for the Q2XKLAF Models 23
  - IO-Link Events for the Q2XKLAF Model 26

Chapter 5 Accessories 28
- Cordsets 28
- Brackets 29

Chapter 6 Product Support and Maintenance 30
- Restoring Factory Defaults 30
- Clean with Mild Detergent and Warm Water 30
- Repairs 30
- Banner Engineering Corp Limited Warranty 30

© Banner Engineering Corp. All rights reserved. www.bannerengineering.com

Chapter Contents

Models 3
Specifications 3

Chapter 1 Features



- Compact sensor for installation in the smallest of spaces
- Exceptional optical performance; up to 3 m sensing range in compact Q2X housing
- Background suppression models for reliable detection of objects when the background condition is not controlled or fixed
- Simple TEACH adjustment of cutoff distance
- Enhanced immunity to fluorescent lights
- Remote configuration and monitoring available over IO-Link
- Class 1 IR laser emitter

WARNING:

- **Do not use this device for personnel protection**
- Using this device for personnel protection could result in serious injury or death.
- This device does not include the self-checking redundant circuitry necessary to allow its use in personnel safety applications. A device failure or malfunction can cause either an energized (on) or de-energized (off) output condition.

Models

Models	Sensing Range	Channel 1	Channel 2	Connections
Q2XKLAF2IR-Q	20 mm to 2000 mm (0.8 in to 78.74 in)	IO-Link, PNP output	User selectable, remote input, PNP output, or PFM Pulse Pro output	150 mm (6 in) PVC-jacketed cable with a 4-pin M8 male quick-disconnect connector
Q2XKLAF2IR-Q5				150 mm (6 in) PVC-jacketed cable with a 4-pin M12 male quick-disconnect connector
Q2XKLAF3IR-Q	20 mm to 3000 mm (0.8 in to 118.1 in)			150 mm (6 in) PVC-jacketed cable with a 4-pin M8 male quick-disconnect connector
Q2XKLAF3IR-Q5				150 mm (6 in) PVC-jacketed cable with a 4-pin M12 male quick-disconnect connector
Q2XNLAF2IR-Q	20 mm to 2000 mm (0.8 in to 78.74 in)	NPN output	Remote input	150 mm (6 in) PVC-jacketed cable with a 4-pin M8 male quick-disconnect connector
Q2XNLAF3IR-Q	20 mm to 3000 mm (0.8 in to 118.1 in)			

Specifications

Supply Voltage
10 V DC to 30 V DC (10% maximum ripple within specified limits) at less than 35 mA, exclusive of load

Sensing Beam
Infrared Class 1 laser (see "Class 1 Laser Description and Safety Information" on page 4)

Sensing Range
20 mm to 3000 mm

Delay at Power-Up
2 s

Supply Protection Circuitry
Protected against reverse polarity and transient overvoltages

© Banner Engineering Corp. All rights reserved.
www.bannerengineering.com

Output Configuration

PNP with IO-Link Model:

- Channel 1: PNP discrete output and IO-Link
- Channel 2: PNP discrete output, PFM output or Remote input

NPN Model:

- Channel 1: NPN discrete output
- Channel 2: Remote input

Output Rating

50 mA total output current

Off-State Leakage Current

< 10 µA at 30 V DC

On-State Saturation Voltage

< 2.5 V at 50 mA

IO-Link Interface

IO-Link Revision V1.1

Smart Sensor Profile: Yes

Baud Rate: 38400 bps

Process Data In Length: 32 bits

Process Data Out Length: 8 bits

Minimum Cycle Time: 2.6 ms

IODD files: Provides all programming options of the display, plus additional functionality

Connections

150 mm (6 in) PVC-jacketed cable with a 4-pin M8 male quick-disconnect connector, or 150 mm (6 in) PVC-jacketed cable with a 4-pin M12 male quick-disconnect connector, depending on the model.

Construction

PC/ABS housing, acrylic lens cover; PVC cable, PBT adjustment switch

Adjustments

One TEACH push button, remote input wire

Indicators

Two LED indicators on the sensor top:

- Green on: Power is on
- Amber on: Output is on

Response Speed

Fast: 33 ms[(1)]

Medium: 100 ms (default)

Slow: 500 ms in Xtalk or Precision Mode

Minimum Object Separation

50 mm

[(1)] The range when using a 6% black card is 2 m in fast mode.

Accuracy

35 mm

Typical accuracy is based on the mean of 256 samples per distance point

Environmental Rating

IP67

Operating Conditions

–20 °C to +50 °C (–4 °F to +122 °F)

95% at +50 °C maximum relative humidity (non-condensing)

Application Notes

For mirror-like objects, minimize the sensor-to-object mounting distance and tilt the sensor so reflected light is directed away from the sensor when the object is present

Certifications

Banner Engineering BV
Park Lane, Culliganlaan 2F bus 3
1831 Diegem, BELGIUM

Turck Banner LTD Blenheim House
Blenheim Court
Wickford, Essex SS11 8YT
GREAT BRITAIN

Required Overcurrent Protection

WARNING: Electrical connections must be made by qualified personnel in accordance with local and national electrical codes and regulations.

Overcurrent protection is required to be provided by end product application per the supplied table.

Overcurrent protection may be provided with external fusing or via Current Limiting, Class 2 Power Supply.

Supply wiring leads < 24 AWG shall not be spliced.

For additional product support, go to www.bannerengineering.com.

Supply Wiring (AWG)	Required Overcurrent Protection (A)	Supply Wiring (AWG)	Required Overcurrent Protection (A)
20	5.0	26	1.0
22	3.0	28	0.8
24	2.0	30	0.5

Class 1 Laser Description and Safety Information



Laser light. Do not stare into the beam.

Complies with 21 CFR 1040.10 and 1040.11 except for deviations pursuant to Laser Notice No. 56, dated May 8, 2019.

CLASS 1 LASER PRODUCT

CAUTION:

- **Never stare directly into the sensor lens.**
- Laser light can damage your eyes.
- Avoid placing any mirror-like object in the beam. Never use a mirror as a retroreflective target.

© Banner Engineering Corp. All rights reserved.
www.bannerengineering.com

CAUTION:

- **Return defective units to the manufacturer.**
- Use of controls or adjustments or performance of procedures other than those specified herein may result in hazardous radiation exposure.
- Do not attempt to disassemble this sensor for repair. A defective unit must be returned to the manufacturer.

CAUTION:

- **Ne regardez jamais directement la lentille du capteur.**
- La lumière laser peut endommager la vision.
- Évitez de placer un objet réfléchissant (de type miroir) dans la trajectoire du faisceau. N'utilisez jamais de miroir comme cible rétro-réfléchissante.

CAUTION:

- **Tout dispositif défectueux doit être renvoyé au fabricant.**
- L'utilisation de commandes, de réglages ou de procédures autres que celles décrites dans le présent document peut entraîner une exposition dangereuse aux radiations.
- N'essayez pas de démonter ce capteur pour le réparer. Tout dispositif défectueux doit être renvoyé au fabricant.

Class 1 lasers are lasers that are safe under reasonably foreseeable conditions of operation, including the use of optical instruments for intrabeam viewing.

Complies with IEC 60825-1:2014 and EN 60825-1:2014+A11:2021.

For safe laser use:

- Do not stare at the laser.
- Do not point the laser at a person’s eye.
- Mount open laser beam paths either above or below eye level, where practical.
- Terminate the beam emitted by the laser product at the end of its useful path.

Class 1 Laser Characteristics

Output power: 0.9 mW (average)
Laser wavelength: 940 nm
Pulse duration: 32.8 ms

FCC Part 15 Class B for Unintentional Radiators

(Part 15.105(b)) This equipment has been tested and found to comply with the limits for a Class B digital device, pursuant to part 15 of the FCC Rules. These limits are designed to provide reasonable protection against harmful interference in a residential installation. This equipment generates, uses, and can radiate radio frequency energy and, if not installed and used in accordance with the instructions, may cause harmful interference to radio communications. However, there is no guarantee that interference will not occur in a particular installation. If this equipment does cause harmful interference to radio or television reception, which can be determined by turning the equipment off and on, the user is encouraged to try to correct the interference by one or more of the following measures:

- Reorient or relocate the receiving antenna.
- Increase the separation between the equipment and receiver.
- Connect the equipment into an outlet on a circuit different from that to which the receiver is connected.
- Consult the dealer or an experienced radio/TV technician for help.

(Part 15.21) Any changes or modifications not expressly approved by the party responsible for compliance could void the user’s authority to operate this equipment.

Industry Canada ICES-003(B)

This device complies with CAN ICES-3 (B)/NMB-3(B). Operation is subject to the following two conditions: 1) This device may not cause harmful interference; and 2) This device must accept any interference received, including interference that may cause undesired operation.

Cet appareil est conforme à la norme NMB-3(B). Le fonctionnement est soumis aux deux conditions suivantes : (1) ce dispositif ne peut pas occasionner d'interférences, et (2) il doit tolérer toute interférence, y compris celles susceptibles de provoquer un fonctionnement non souhaité du dispositif.

© Banner Engineering Corp. All rights reserved.
www.bannerengineering.com

Dimensions

All measurements are listed in millimeters [inches], unless noted otherwise. The measurements provided are subject to change.

Dimensions

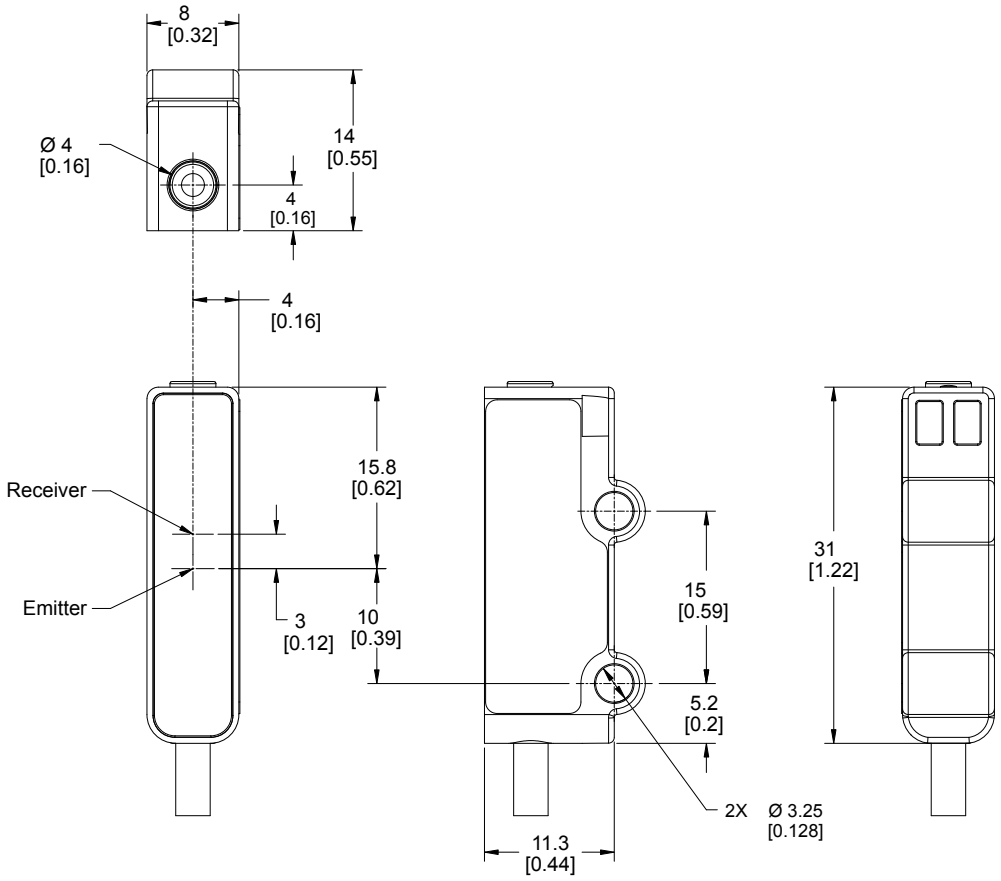

Hardware Included:

- Two M3 x 0.5 - 6g x 16 mm SS Screws
- Two M3 x 0.5 - 6H SS Nuts
- Two M3 flat SS Washers
- Two M3 internal tooth SS Lock Washers

Maximum torque 0.9 Nm (8 in-lbf)

© Banner Engineering Corp. All rights reserved.
www.bannerengineering.com

Performance Curves

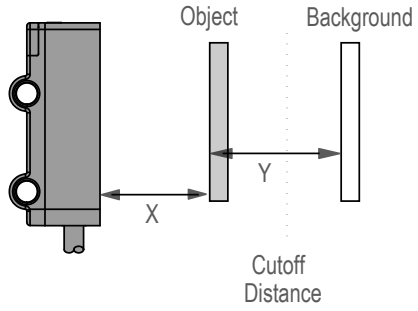

X: Distance to Object (mm)

Y: Minimum Separation Between Object and Background (mm)

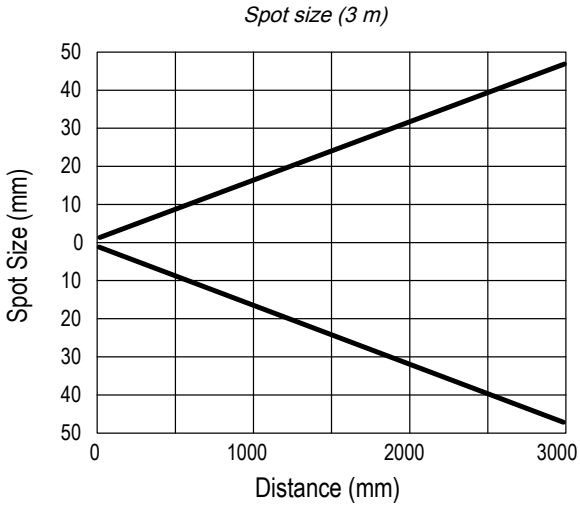

Repeatability: 3000 mm models

Typical performance curves for the 3000 mm models.

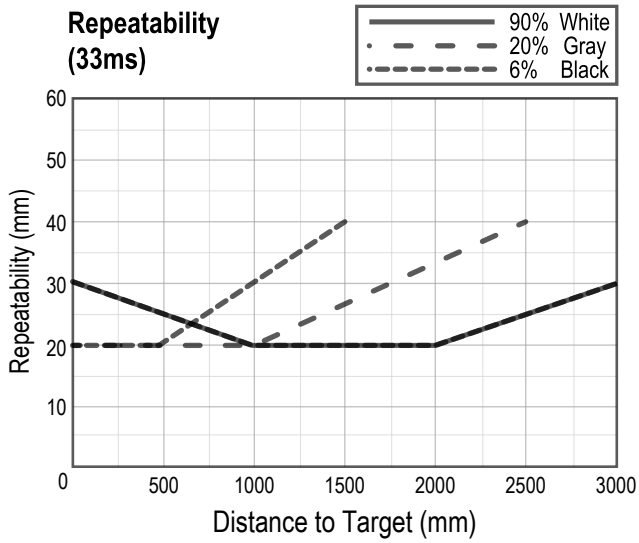

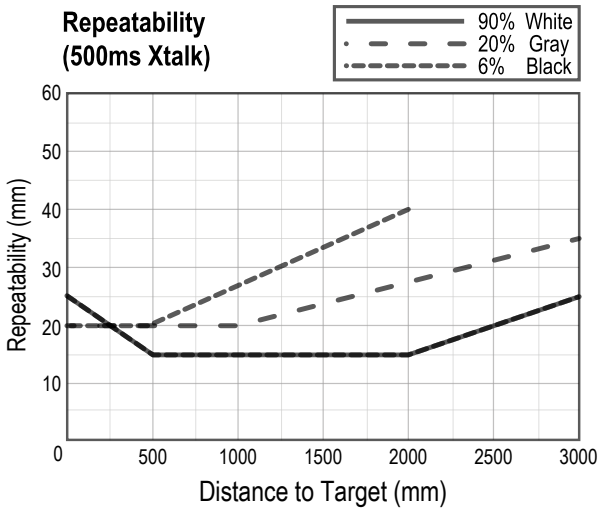

Continued on page 8

© Banner Engineering Corp. All rights reserved.
www.bannerengineering.com

Continued from page 7

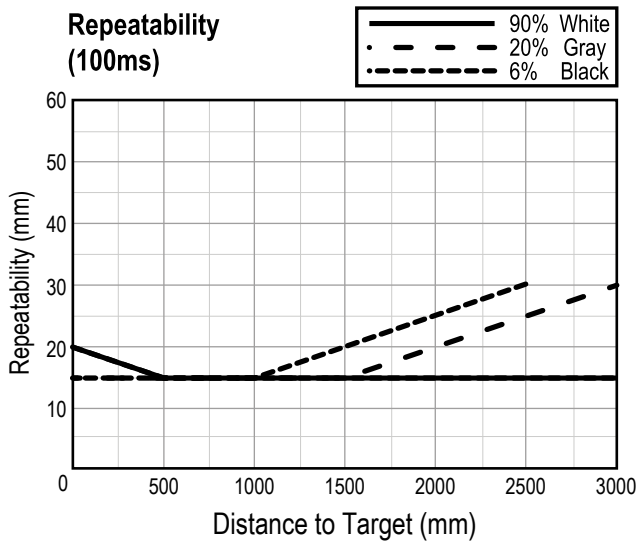

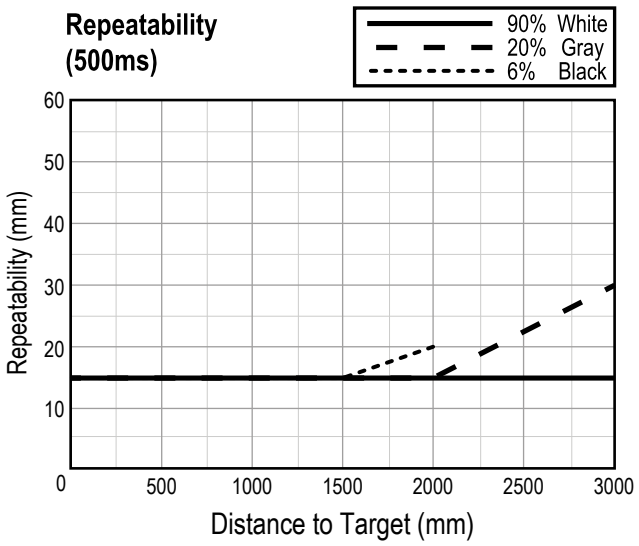

Repeatability: 2000 mm models

Typical performance curves for the 2000 mm models.

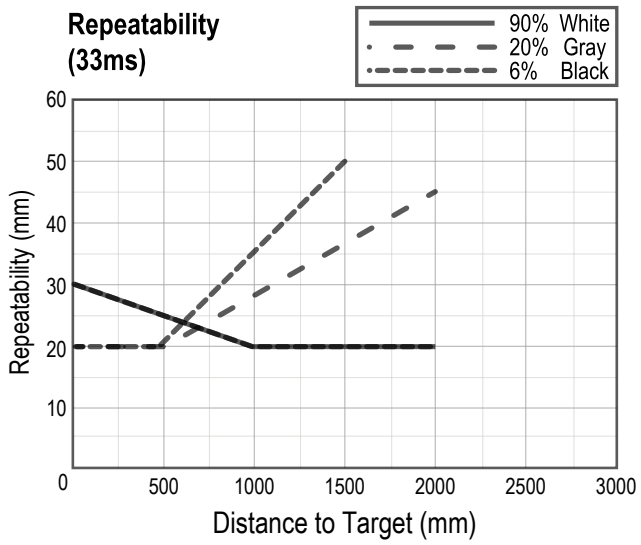

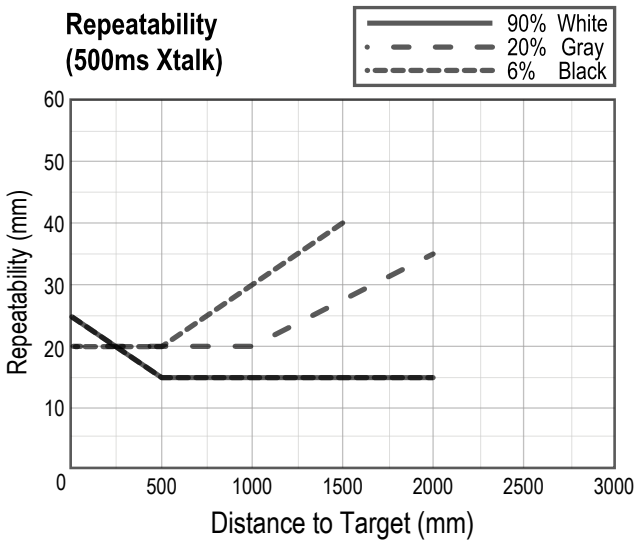

Continued on page 9

© Banner Engineering Corp. All rights reserved.
www.bannerengineering.com

Continued from page 8

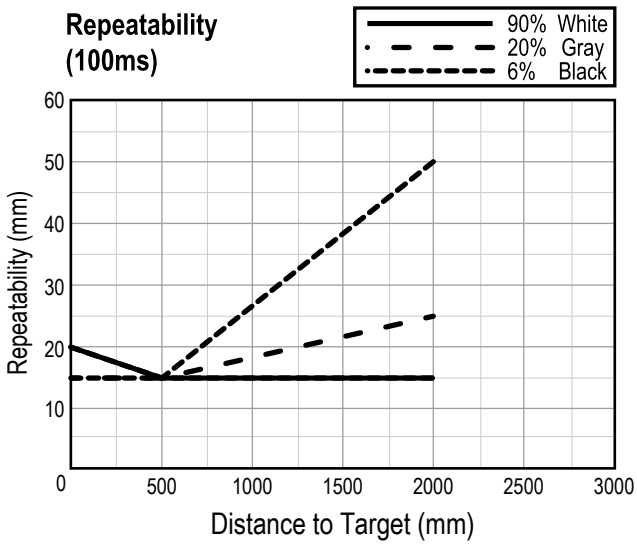

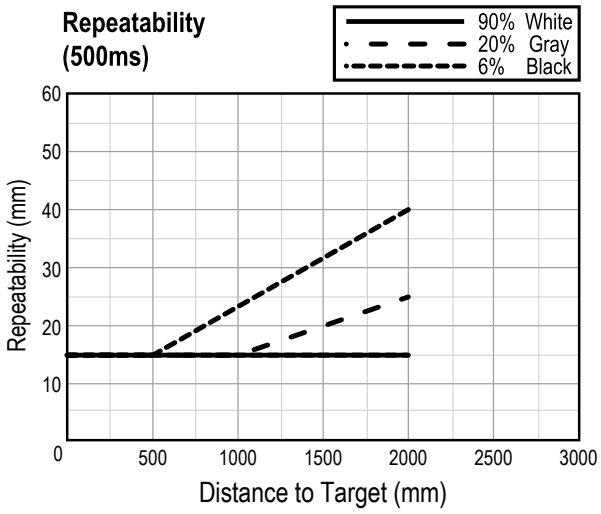

© Banner Engineering Corp. All rights reserved.
www.bannerengineering.com

Chapter Contents

Overview 10
Mount the Device 10
Wiring 10

Chapter 2 Installation

Overview

The Q2X Laser Measurement Sensor ignores objects beyond the set cutoff distance.



Background suppression mode can be used in most situations with varying object color and position or with varying background conditions.

1. Green: Power Indicator
2. Amber: Output Indicator
3. TEACH Button

Mount the Device

1. If a bracket is needed, mount the device onto the bracket.
2. Mount the device (or the device and the bracket) to the machine or equipment at the desired location. Do not tighten the mounting screws at this time.
3. Check the device alignment.
4. Tighten the mounting screws to secure the device (or the device and the bracket) in the aligned position.

Wiring

CAUTION: Cabled wiring diagrams are shown. Quick disconnect wiring diagrams are functionally identical. Observe proper ESD precautions (grounding) when connecting quick disconnect models.

CH1 as PNP/IO-Link and CH2 as the Remote Input

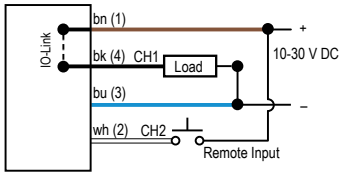

CH1 as PNP/IO-Link and CH2 as PNP Discrete or PFM Output

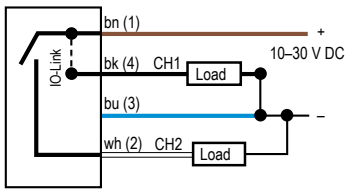

4-pin male M8 quick disconnect connector

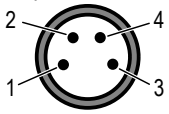

Continued on page 11

© Banner Engineering Corp. All rights reserved.
www.bannerengineering.com

Continued from page 10

NPN and Remote Input

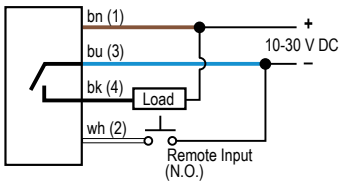

4-pin male M12 quick disconnect connector

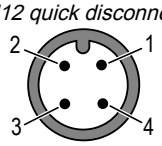

© Banner Engineering Corp. All rights reserved.
www.bannerengineering.com

Chapter Contents

Select the TEACH Mode 12
TEACH Button Overview 12
Remote Input Wire Menu 13
TEACH Procedures 14
Select Light Operate or Dark Operate 18
Lock and Unlock the Button 19
Pulse Frequency Modulation (PFM) 19

Chapter 3 Configuration Instructions

Select the TEACH Mode

Configure the sensor using the TEACH button on the sensor or the remote input (limited programming options).

To select the TEACH mode, follow these steps:

1. Put the sensor into TEACH mode.

Method	Action	Result
TEACH Button	Press and hold the TEACH button for two seconds.	The amber and green LEDs flash.
Remote Input	No action is necessary.	

2. Enter the TEACH mode selection.

Method	Action	Result
TEACH Button	Press the TEACH button three times.	The amber and green LEDs flash three times.
Remote Input	Pulse the remote input wire three times.	

3. Select the TEACH method.

TEACH Method	How to Select
One-Point Object SET	Press the TEACH button once or pulse the remote input once.
Two-Point Static Background Suppression (Default)	Press the TEACH button twice or pulse the remote input twice.
One-Point Window SET (Foreground Suppression)	Press the TEACH button three times or pulse the remote input three times.
One-Point Dual Mode (Intensity + Distance)	Press the TEACH button four times or pulse the remote input four times.
PFM Output	See "Pulse Frequency Modulation (PFM)" on page 19.

   After the TEACH method has been selected, the LEDs flash the same number of times as the button press/remote pulse.

4. Continue to the appropriate procedure to finish configuring the sensor.
   - "TEACH the Sensor Using One-Point Object SET" on page 15
   - "TEACH the Sensor Using Two-Point Static Background Suppression" on page 14
   - "TEACH the Sensor Using One-Point Window SET (Foreground Suppression)" on page 16
   - "TEACH the Sensor Using One-Point Dual Mode (Intensity + Distance)" on page 17

TEACH Button Overview

Press the TEACH button to configure the sensor.

See TEACH Procedures for detailed instructions.

© Banner Engineering Corp. All rights reserved.
www.bannerengineering.com

TEACH Button Chart

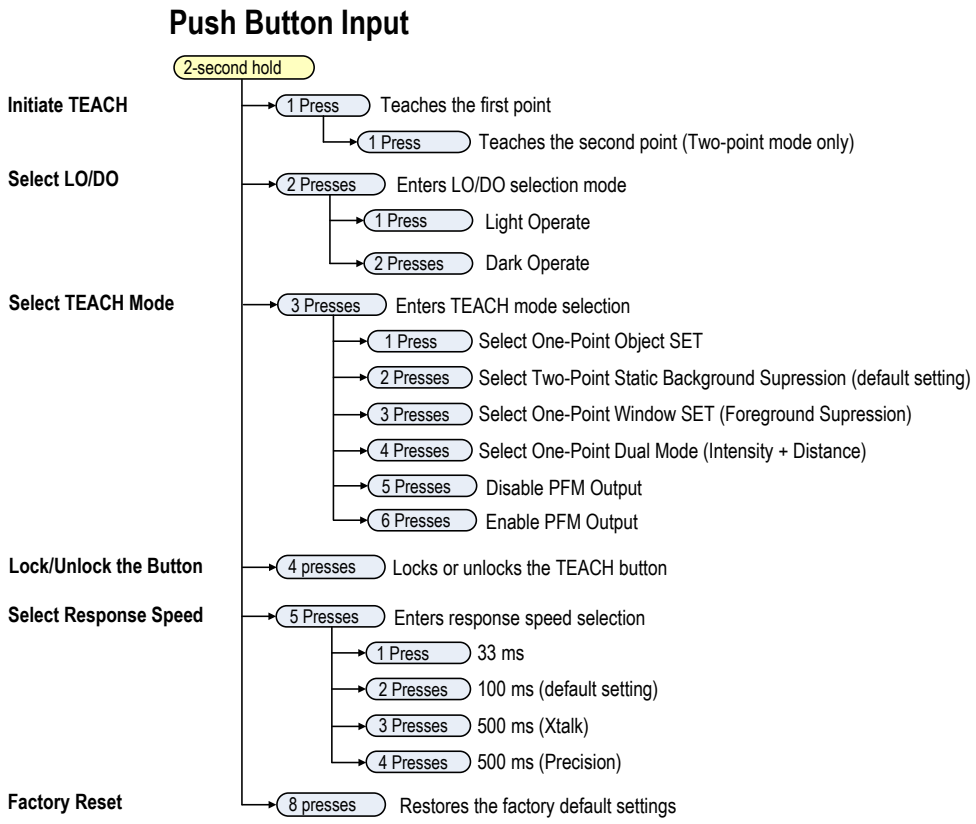

Remote Input Wire Menu

Use the remote input wire to program the sensor remotely.

The remote input provides limited programming options. The remote input is either Active High or Active Low depending on the polarity of the sensor. If the polarity is PNP, the remote input is Active High. If polarity is NPN, the remote input is Active Low.

For Active High, connect the white wire to 24 V DC with a remote switch connected between the wire and 24 V DC. For Active Low, connect the white wire to ground (0 V DC) with a remote switch connected between the wire and ground.

Pulse the remote input according to the diagram and the instructions provided in this manual. The length of the individual programming pulses is equal to the value **T: 0.04 seconds ≤ T ≤ 0.8 seconds**.

Exit remote programming modes by activating the remote input for longer than 2 seconds.

© Banner Engineering Corp. All rights reserved.
www.bannerengineering.com

Remote Input menu

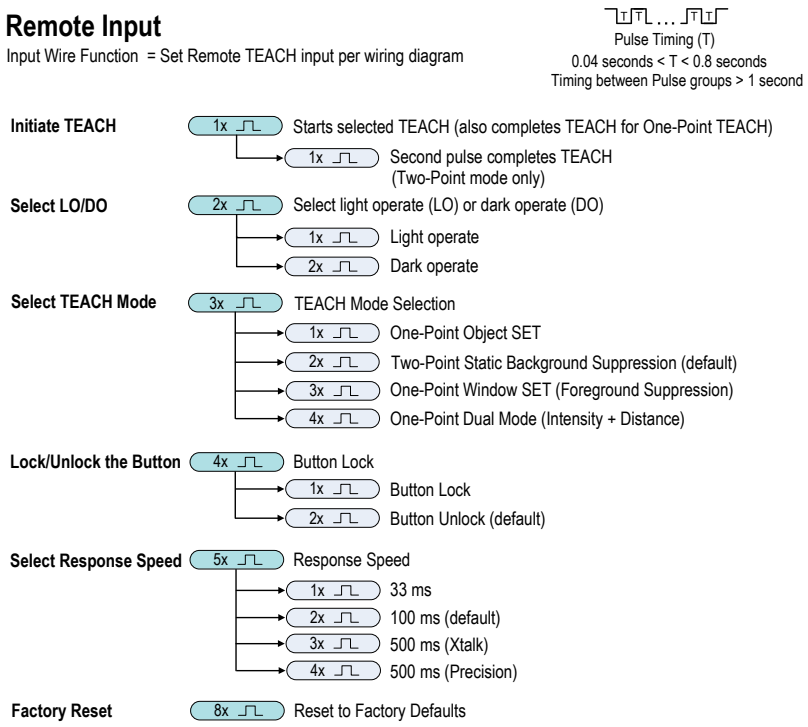

TEACH Procedures

Use the following procedures to configure the sensor.

TEACH the Sensor Using Two-Point Static Background Suppression

Two-Point TEACH sets a single switch point between two taught target distances. Use either the TEACH button or the remote line to teach the sensor.

The duration of each remote input pulse is defined as T, where T is 0.04 s < T < 0.8 s.

TEACH Process for Two-Point Static Background Suppression

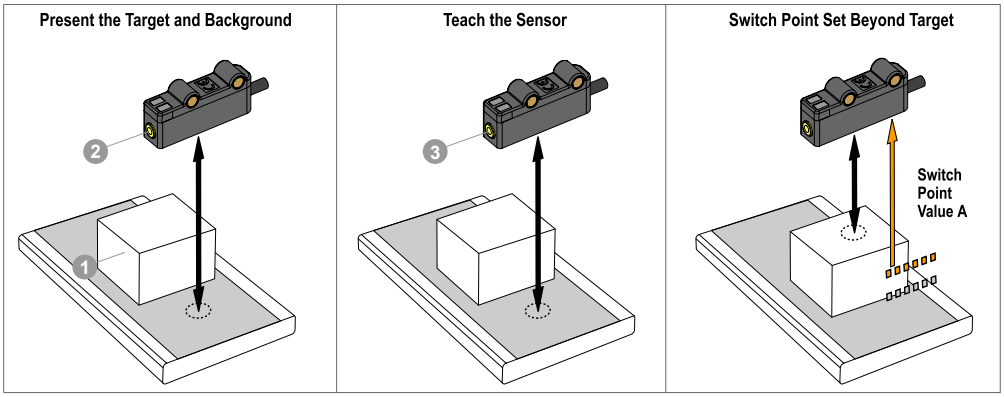

1. Select the TEACH mode (see "Select the TEACH Mode" on page 12).
2. Present the first target.
3. Start the TEACH process.

Method	Action	Result
TEACH Button	Press and hold the TEACH button for two seconds.	The amber and green LEDs flash.

Continued on page 15

© Banner Engineering Corp. All rights reserved.
www.bannerengineering.com

Continued from page 14

Method	Action	Result
Remote Input	No action is necessary.	

4. Teach the first target location.

Method	Action	Result
TEACH Button	Press the TEACH button once.	The LEDs turn off, then flash twice.
Remote Input	Single pulse the remote input wire.	

5. Present the second target.
6. Teach the second target location.

Method	Action	Result
TEACH Button	Press the TEACH button once.	The LEDs turn off, then flash as shown below.
Remote Input	Single pulse the remote input wire.	

After the sensor is taught the target locations, both LEDs flash with the results code, and then the sensor returns to Run mode.

Results of the two-point static background suppression TEACH

Condition	TEACH Result	Number of LED Flashes
Two points with different distance values within the sensor's range have been taught.	Sets a switch point between the two taught distance values.	Three
Two points with the same distance value within the sensor's range have been taught.	Sets a switch point in front of taught distance equal to the uniform reflectivity minimum object separation.	Six
Two points with different distance values have been taught; one point is within sensor range and the other is outside sensor range.	Sets a switch point between the taught distance and the maximum range.	Eight
Two points with distance values outside the sensor's range have been taught.	After the sensor is taught the target locations, both LEDs flash with the results code, and then the sensor returns to Run mode.	Ten

TEACH the Sensor Using One-Point Object SET

One-Point Object SET sets a single switch point just behind the taught target distance. Objects beyond the taught switch point are ignored.

The duration of each remote input pulse is defined as T, where T is 0.04 s < T < 0.8 s.

TEACH Process for One-Point Object SET

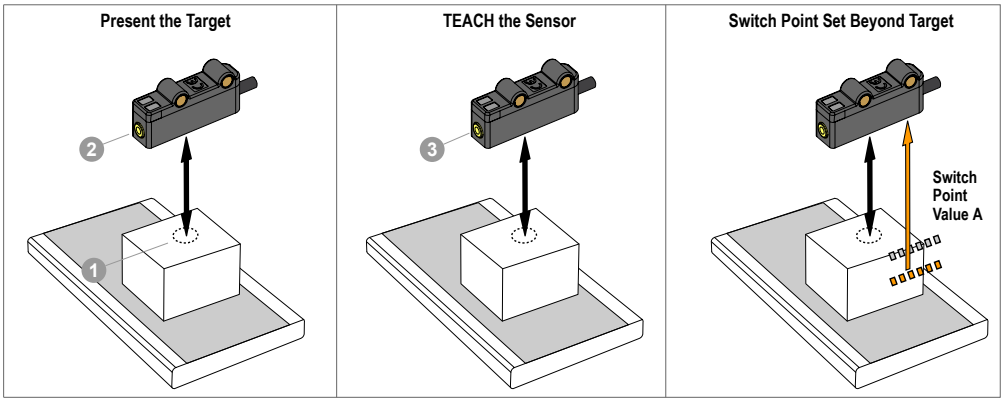

1. Select the TEACH mode (see "Select the TEACH Mode" on page 12).

© Banner Engineering Corp. All rights reserved.
www.bannerengineering.com

2. Present the first target.
3. Start the TEACH process.

Method	Action	Result
TEACH Button	Press and hold the TEACH button for two seconds.	The amber and green LEDs flash.
Remote Input	No action is necessary.	

4. Teach the target location.

Method	Action	Result
TEACH Button	Press the TEACH button once.	The LEDs turn off, then flash three times.
Remote Input	Single pulse the remote input wire.	

After the sensor is taught the target location, both LEDs flash with the results code, and then the sensor returns to Run mode.

TEACH the Sensor Using One-Point Window SET (Foreground Suppression)

One-Point Window SET defines a window (two switch points) centered around the taught target distance.

The duration of each remote input pulse is defined as T, where T is 0.04 s < T < 0.8 s.

TEACH Process for One-Point Window SET (FGS)

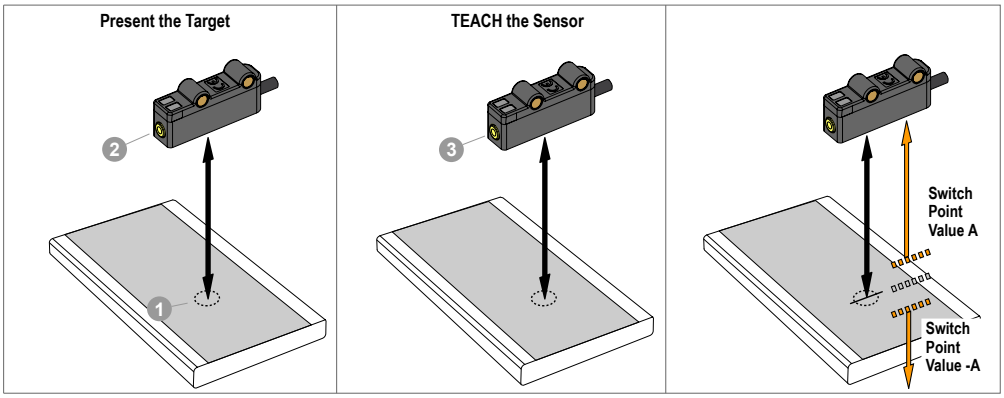

1. Select the TEACH mode (see "Select the TEACH Mode" on page 12).
2. Present the target.
3. Start the TEACH process.

Method	Action	Result
TEACH Button	Press and hold the TEACH button for two seconds.	The amber and green LEDs flash.
Remote Input	No action is required.	

4. Teach the target.

Method	Action	Result
TEACH Button	Press the TEACH button once.	The LEDs turn off, then flash three times.
Remote Input	Single pulse the remote input.	

After the sensor is taught the target location, both LEDs flash with the results code, and then the sensor returns to Run mode.

© Banner Engineering Corp. All rights reserved.
www.bannerengineering.com

TEACH the Sensor Using One-Point Dual Mode (Intensity + Distance)

Dual (Intensity + Distance) TEACH records the distance and amount of light received from the reference surface. The output switches when an object passing between the sensor and the reference surface changes the perceived distance or amount of returned light.

The duration of each remote input pulse is defined as T, where T is 0.04 s < T < 0.8 s.

TEACH Process for One-Point Dual Mode

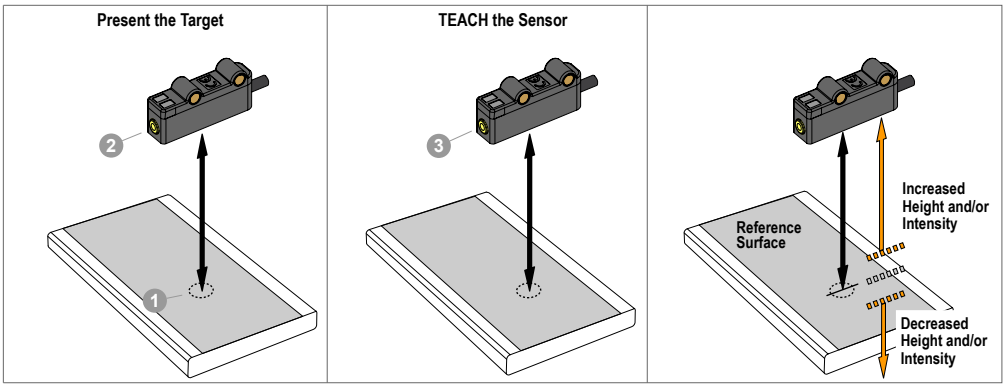

1. Select the TEACH mode (see "Select the TEACH Mode" on page 12).
2. Present the target.
3. Start the TEACH process.

Method	Action	Result
TEACH Button	Press and hold the TEACH button for two seconds.	The amber and green LEDs flash.
Remote Input	No action is required.	

4. Teach the target.

Method	Action	Result
TEACH Button	Press the TEACH button once.	The LEDs turn off, then flash three times.
Remote Input	Single pulse the remote input line.	

After the sensor is taught the target locations, both LEDs flash with the results code, and then the sensor returns to Run mode.

Cancel the TEACH Process

1. When the LED indicators are flashing, press and hold the TEACH button for two seconds.
   The amber and green LEDs flash alternately.
2. Release the TEACH button.
   The sensor returns to Run mode.

The TEACH process cannot be canceled using the remote input wire.

Change the Response Speed

Follow these steps to change the response speed.

1. Put the sensor into TEACH mode.

© Banner Engineering Corp. All rights reserved.
www.bannerengineering.com

Method	Action	Result
TEACH Button	Press and hold the TEACH button for two seconds.	The amber and green LEDs flash.
Remote Input	No action is necessary.	

2. Select Response Speed.

Method	Action	Result
TEACH Button	Press the TEACH button five times.	The amber and green LEDs flash five times.
Remote Input	Pulse the remote input wire five times.	

3. Choose the response speed.

Response Speed	How to Select
33 ms	Press the TEACH button once or pulse the remote input once.
100 ms (default setting)	Press the TEACH button twice or pulse the remote input twice.
500 ms (Xtalk mode)	Press the TEACH button three times or pulse the remote input three times.
500 ms (Precision mode)	Press the TEACH button four times or pulse the remote input four times.

In Xtalk mode, the Q2X is more resistant to crosstalk. In Precision mode, the Q2X has the best repeatability.

Select Light Operate or Dark Operate

Follow these steps to select between light operate (LO) or dark operate (DO). The default output configuration is light-operate mode.

In light operate (LO) mode, the output is ON when the target returns the same or more light to the sensor and OFF when the sensor detects less light than the configured/taught target.

In dark operate (DO) mode, the output is ON when the target returns less light to the sensor than the configured target and OFF when the sensor detects more light than the configured/taught target.

1. Put the sensor into TEACH mode.

Method	Action	Result
TEACH Button	Press and hold the TEACH button for 2 seconds.	The amber and green LEDs flash.
Remote Input	No action is necessary	

2. Select the LO/DO selection mode.

Method	Action	Result
TEACH Button	Press the TEACH button two times.	The amber and green LEDs flash twice.
Remote Input	Pulse the remote input wire two times.	

3. Choose LO or DO.

Method	Action	Result
TEACH Button	Press the TEACH button once for LO or twice for DO.	The amber and green LEDs flash once for LO and twice for DO.
Remote Input	Pulse the remote input wire once for LO or twice for DO.	

© Banner Engineering Corp. All rights reserved.
www.bannerengineering.com

Lock and Unlock the Button

Follow these steps to lock or unlock the TEACH button.

1. Initiate the button locking or unlocking procedure.

Method	Action	Result
TEACH Button	No action.	The LEDs flash four times.
Remote Input	Pulse the wire four times.	

2. Lock or unlock the button.

Method	Action	Result
TEACH Button	Press the TEACH button four times.	The green LED flashes four times.
Remote Input	To lock the button: Single-pulse the remote input wire. To unlock the button: Double-pulse the remote input wire.	

Pulse Frequency Modulation (PFM)

The Q2X Laser Measurement Sensor can be configured to generate pulses on the white wire (pin 2).

The pulse frequency is proportional to the sensor's measured distance to represent an analog signal with only a discrete counter. The sensing range of the sensor is scaled from 100 Hz to 600 Hz, where 100 Hz represents the sensor's near-range limit (20 mm) and 600 Hz represents the sensor's far-range limit (3000 mm).

An output of 50 Hz represents a loss of signal condition where there is no target or the target is out of the sensor's range. There is a two-second delay before the sensor sets the output to 50 Hz to indicate loss of signal. During the two seconds, the output holds the last PFM value.

The white wire (pin 2) can be configured as a PFM output using either the TEACH button or by sending a parameter via IO-Link. While PFM is enabled, the remote input is disabled.

Enable the PFM Output

Follow these steps to enable the PFM output. This changes the white wire (pin 2) from a remote TEACH input to a PFM output.

1. Press and hold the TEACH button for two seconds.
   The amber and green LEDs flash.
2. Press the TEACH button three times.
   The amber and green LEDs flash three times.
3. Press the TEACH button six times.
   The amber and green LEDs flash six times and the PFM output is enabled.

Disable the PFM Output

Follow these steps to disable the PFM output. This changes the white wire (pin 2) from a PFM output to a remote TEACH input.

1. Press and hold the TEACH button for two seconds.
   The amber and green LEDs flash.
2. Press the TEACH button three times.
   The amber and green LEDs flash three times.
3. Press the TEACH button five times.
   The LEDs flash five times and the PFM output is disabled.

© Banner Engineering Corp. All rights reserved.

Chapter Contents

IO-Link Parameters for Q2XKLAF Models 20

Chapter 4 IO-Link Interface

IO-Link® [2]is a point-to-point communication link between a master device and sensor. Use IO-Link to parameterize sensors and transmit process data automatically.

For the latest IO-Link protocol and specifications, see www.io-link.com.

Each IO-Link device has an IODD (IO Device Description) file that contains information about the manufacturer, article number, functionality etc. This information can be easily read and processed by the user. Each device can be unambiguously identified via the IODD as well as via an internal device ID. Download the Q2X's IO-Link IODD package (p/n 232947) from Banner Engineering's website at www.bannerengineering.com.

Banner has also developed Add On Instruction (AOI) files to simplify ease-of-use between the Q2X, multiple third-party vendors' IO-Link masters, and the Logix Designer software package for Rockwell Automation PLCs. Three types of AOI files for Rockwell Allen-Bradley PLCs are listed below. These files and more information can be found at www.bannerengineering.com.

Process Data AOIs—These files can be used alone, without the need for any other IO-Link AOIs. The job of a Process Data AOI is to intelligently parse out the Process Data word(s) in separate pieces of information. All that is required to make use of this AOI is an EtherNet/IP connection to the IO-Link Master and knowledge of where the Process Data registers are located for each port.

Parameter Data AOIs—These files require the use of an associated IO-Link Master AOI. The job of a Parameter Data AOI, when working in conjunction with the IO-Link Master AOI, is to provide quasi-realtime read/write access to all IO-Link parameter data in the sensor. Each Parameter Data AOI is specific to a given sensor or device.

IO-Link Master AOIs—These files require the use of one or more associated Parameter Data AOIs. The job of an IO-Link Master AOI is to translate the desired IO-Link read/write requests, made by the Parameter Data AOI, into the format a specific IO-Link Master requires. Each IO-Link Master AOI is customized for a given brand of IO-Link Master.

Add and configure the relevant Banner IO-Link Master AOI in your ladder logic program first; then add and configure Banner IO-Link Device AOIs as desired, linking them to the Master AOI as shown in the relevant AOI documentation.

IO-Link Parameters for Q2XKLAF Models

This document refers to the following IODD file: Banner_Engineering-q2xtof-20230529-IODD1.1.xml. The IODD file and support files can be found on www.bannerengineering.com under the download section of the product family page.

IO-Link Parameters

Parameter	Value	Parameter	Value
IO-Link revision	V1.1.2	Port class	A
Process Data In length	32 bits	SIO mode	Yes
Process Data Out length	8 bits	Smart Sensor Profile	Yes
Bit Rate	38400 bps	Block parameterization	Yes
Minimum cycle time	2.6 ms	Data Storage	Yes
Device ID	0x0B0002		

[2] IO-Link® is a registered trademark of PROFIBUS Nutzerorganisation e.V.

© Banner Engineering Corp. All rights reserved.
www.bannerengineering.com

IO-Link Process Data In (Device to Master) for the Q2XKLAF

Index 64, Subindex 4 = 0

Subindex	Name	Number of Bits	Data Values
1	Channel 1 Output State	1	0=inactive, 1=active
2	Channel 2 Output State	1	0=inactive, 1=active
3	Stability State	1	0=no target/marginal, 1=stable
4	Measurement 1 Value	13	Value depends on "Configuration.Measurement 1 Selection"
5	Measurement 2 Value	16	Value depends on "Configuration.Measurement 2 Selection"

Octet 0

Subindex	5	5	5	5	5	5	5	5
Bit Offset	31	30	29	28	27	26	25	24
Value	0	0	0	0	0	0	1	0

Octet 1

Subindex	5	5	5	5	5	5	5	5
Bit Offset	23	22	21	20	19	18	17	16
Value	1	0	1	1	0	1	1	0

Octet 2

Subindex	4	4	4	4	4	4	4	4
Bit Offset	15	14	13	12	11	10	9	8
Value	1	1	1	1	1	1	1	1

Octet 3

Subindex	4	4	4	4	4	3	2	1
Bit Offset	7	6	5	4	3	2	1	0
Value	1	1	1	1	1	1	0	1

Example parameter values:

- Channel 1 Output = Active
- Channel 2 Output = Inactive
- Stability State = Stable
- Measurement 1 Value = 8191
- Measurement 2 Value = 694

Index 64, Subindex 4 = 1

Subindex	Name	Number of Bits	Data Values
1	Measurement 1 Value	16	Value depends on "Configuration.Measurement 1 Selection"
2	Measurement 2 Value	16	Value depends on "Configuration.Measurement 2 Selection"

© Banner Engineering Corp. All rights reserved.
www.bannerengineering.com

Octet 0

Subindex	2	2	2	2	2	2	2	2
Bit offset	31	30	29	28	27	26	25	24
Value	0	0	0	0	0	0	1	1

Octet 1

Subindex	2	2	2	2	2	2	2	2
Bit offset	23	22	21	20	19	18	17	16
Value	0	1	0	0	1	0	1	1

Octet 2

Subindex	1	1	1	1	1	1	1	1
Bit offset	15	14	13	12	11	10	9	8
Value	0	1	1	0	0	1	1	1

Octet 3

Subindex	1	1	1	1	1	1	1	1
Bit offset	7	6	5	4	3	2	1	0
Value	1	0	0	0	1	1	1	1

Example parameter values:

- Measurement 1 Value = 26511
- Measurement 2 Value = 843

Index 64, Subindex 4=2

Subindex	Name	Number of Bits	Data Values
1	Measurement Value	16	The measurement device value
2	Measurement Scale	8	The measurement device scale
3	Stability State	1	0=no target/marginal, 1=stable
4	Channel 2 Output State	1	0=inactive, 1=active
5	Channel 1 Output State	1	0=inactive, 1=active

Octet 0

Subindex	1	1	1	1	1	1	1	1
Bit offset	31	30	29	28	27	26	25	24
Value	0	0	0	0	0	0	0	1

Octet 1

Subindex	1	1	1	1	1	1	1	1
Bit offset	23	22	21	20	19	18	17	16
Value	1	1	1	1	1	1	0	1

Octet 2

Subindex	2	2	2	2	2	2	2	2

Continued on page 23

© Banner Engineering Corp. All rights reserved.
www.bannerengineering.com

Continued from page 22

Bit offset	15	14	13	12	11	10	9	8
Value	1	1	1	1	1	1	0	1

Octet 3

Subindex	//	//	//	//	//	3	4	5
Bit offset	7	6	5	4	3	2	1	0
Value	NA	NA	NA	NA	NA	0	1	0

Example parameter values:

- Measurement Value = 509
- Measurement Scale = -3
- Stability State = no target/marginal
- Channel 2 Output State = Active
- Channel 1 Output State = Inactive

IO-Link Process Data Out (Master to Device) for the Q2XKLAF Models

Subindex	Name	Number of Bits	Data Values
1	Emitter Disable	1	0 = Active, 1 = Inactive

Octet 0

Subindex	//	//	//	//	//	//	//	1
Bit offset	7	6	5	4	3	2	1	0
Value	NA	NA	NA	NA	NA	NA	NA	1

Example parameter values:

- Emitter Disable = 1 (Inactive)

Parameters Set Using IO-Link for the Q2XKLAF Models

These parameters can be read from and/or written to an IO-Link model of the Q2X ToF sensor. Also included is information about whether the variable in question is saved during Data Storage and whether the variable came from the IO-Link Smart Sensor Profile.

Unlike Process Data In, which is transmitted from the IO-Link device to the IO-Link master cyclically, these parameters are read or written acyclically as needed.

IO-Link Parameters

Index	Subindex	Name	Length	Value Range	Default	Access Rights	Data Storage?	Smart Sensor Profile
0	1-16	Direct Parameter Page 1 (incl. Vendor ID & Device ID)				ro		
1	1-16	Direct Parameters Page 2				rw		
2		Standard Command		65 = SP1 Single Value Teach, 67 = SP1 Two Value Teach TP1, 68 = SP1 Two Value Teach TP2, 79 = SP1 Teach Exit, 130 = Restore Factory Settings, 162 = Start discovery, 163 = Stop discovery		wo		y

Continued on page 24

© Banner Engineering Corp. All rights reserved.
www.bannerengineering.com

Continued from page 23

Index	Subindex	Name	Length	Value Range	Default	Access Rights	Data Storage?	Smart Sensor Profile
3		Data Storage Index (device-specific list of parameters to be stored)				rw		
4-11		reserved by IO-Link Specification						
12		Device Access Locks						
12	1	Parameter Write Access Lock		0 = off 1 = on	0	rw	y	
12	2	Data Storage Lock		0 = off, 1 = on	0	rw	y	
12	3	Local Parameterization Lock		0 = off, 1 = on	0	rw	y	
12	4	Local User Interface Lock		0 = off, 1 = on	0	rw	y	
13		Profile Characteristic				ro		
14		PDInput Descriptor				ro		
15		PDOut Descriptor				ro		
16		Vendor Name string		Banner Engineering Corporation		ro		
17		Vendor Text string		More Sensors. More Solutions.		ro		
18		Product Name string		Q2X		ro		
19		Product ID string				ro		
20		Product Text string				ro		
21		Serial Number				ro		
22		Hardware Version				ro		
23		Firmware Version				ro		
24		App Specific Tag (user defined)				rw	y	
25-35		reserved						
36		Device Status	8-bit integer	0=Device is OK, 1=Maintainance required, 2=Out of specification, 3=Functional check, 4=Failure, 5..255 Reserved		ro		
37		Detailed Device Status	Array[6] of 3-octet			ro		
38-39		reserved						
40		Process Data Input		see Process Data In		ro		
41		Process Data Output		see Process Data Out		ro		
42-57		unused/reserved						
58		Teach-in Channel		0 = Default, 1 = BDC1, 2 = BDC2	0	rw		y
59		Teach-In Status						
59	1	Teach State	4-bit integer	0 = Idle, 1 = SP1 Success, 4 = Wait for Command, 5 = Busy, 7 = Error		ro		y
59	2	SP1 TP1	1-bit integer	0 = not taught or unsuccessful, 1 = successfully taught		ro		y
59	3	SP1 TP2	1-bit integer	0 = not taught or unsuccessful, 1 = successfully taught		ro		y
60		BDC1 Setpoints						
60	1	BDC1 Setpoint SP1	32-bit integer	20 to 3000 mm		rw	y	y
60	2	BDC1 Setpoint SP2	32-bit integer	20 to 3000 mm		rw	y	y

Continued on page 25

© Banner Engineering Corp. All rights reserved.
www.bannerengineering.com

Continued from page 24

Index	Subindex	Name	Length	Value Range	Default	Access Rights	Data Storage?	Smart Sensor Profile
61		BDC1 Configuration						
61	1	BDC1 Switchpoint Logic	8-bit integer	0 = LO, 1 = DO	0	rw	y	y
61	2	BDC1 Mode	8-bit integer	1 = One-Point Object SET, 128 = Two-Point static BGS, 129 = Two-Point Window (FGS), 130 = One-Point Window (FGS), 131 = Dual Mode	128	rw	y	y
61	3	BDC1 Hysteresis	16-bit integer	-3000 to +3000 mm	0	rw	y	y
62		BDC2 Setpoints						
62	1	BDC2 Setpoint SP1	32-bit integer	20 to 3000 mm		rw	y	y
62	2	BDC2 Setpoint SP2	32-bit integer	20 to 3000 mm		rw	y	y
63		BDC2 Configuration						
63	1	BDC2 Switchpoint Logic	8-bit integer	0 = LO, 1 = DO	0	rw	y	y
63	2	BDC2 Mode	8-bit integer	1 = One-Point Object SET, 128 = Two-Point static BGS, 129 = Two-Point Window (FGS), 130 = One-Point Window (FGS), 131 = Dual Mode	128	rw	y	y
63	3	BDC2 Hysteresis	16-bit integer	-3000 to +3000 mm	0	rw	y	y
64		Configuration						
64	1	Response Speed	8-bit Uinteger	0 = High Speed, 2 = Default, 3 = Robust, 4 = Clear Object	2	rw	y	
	2	Secondary Output Function	8-bit Uinteger	0 = Remote Teach Input 1 = Laser On 4 = Complementary Output 5 = Laser Off 6 = Pulse Frequency Modulation 7 = Independent Output	0	rw	y	
64	3	IOL Filter Time	16-bit Uinteger	0 to 65535	0	rw	y	
64	4	Include Binary Data in Process Data	8-bit Uinteger	0 = Include, 1 = Don't Include, 2 = Measurement Device	0	rw	y	
64	5	Process Data Measurement 1 Selection	8-bit Uinteger	0 = Disabled, 1 = Excess Gain, 2 = Excess Gain / 10, 3 = Channel 1 Dual Mode Percent	1	rw	y	
64	6	Process Data Measurement 2 Selection	8-bit Uinteger	0 = Disabled, 1 = Distance Measurement Value, 2 = Channel 2 Dual Mode Percent	1	rw	y	
65		BDC1 Vendor Specific Configuration						
65	1	BDC1 Delay Mode	8-bit Uinteger	0 = Disabled, 1 = On-Off Delay, 2 = Oneshot	0	rw	y	
65	2	BDC1 Delay Time 1	32-bit Uinteger	0 to 90000 ms	0ms	rw	y	
65	3	BDC1 Delay Time 2	32-bit Uinteger	0 to 90000 ms	0ms	rw	y	
65	4	BDC1 Teach Offset Mode	8-bit Uinteger	0 = Auto, 1 = User Selected	0	rw	y	
65	5	BDC1 FGS Window Size Mode	8-bit Uinteger	0 = Auto, 1 = User Selected	0	rw	y	
65	6	BDC1 User Teach Offset	32-bit integer	-2980 to +2980 mm	0mm	rw	y	
65	7	BDC1 FGS User Window Size	32-bit integer	20 to 2980 mm	0mm	rw	y	
65	8	BDC1 Auto-Thresholding	8-bit Uinteger	0 = Slow, 1 = Medium, 2 = Fast	3	rw	y	
66		BDCD Vendor Specific Configuration						
66	1	BDC2 Delay Mode	8-bit Uinteger	0 = Disabled, 1 = On-Off Delay, 2 = Oneshot	0	rw	y	

Continued on page 26

© Banner Engineering Corp. All rights reserved.
www.bannerengineering.com

Continued from page 25

Index	Subindex	Name	Length	Value Range	Default	Access Rights	Data Storage?	Smart Sensor Profile
66	2	BDC2 Delay Time 1	32-bit Uinteger	0 to 90000 ms	0ms	rw	y	
66	3	BDC2 Delay Time 2	32-bit Uinteger	0 to 90000 ms	0ms	rw	y	
66	4	BDC2 Teach Offset Mode	8-bit Uinteger	0 = Auto, 1 = User Selected	0	rw	y	
66	5	BDC2 FGS Window Size Mode	8-bit Uinteger	0 = Auto, 1 = User Selected	0	rw	y	
66	6	BDC2 User Teach Offset	32-bit integer	-2980 to +2980 mm	0mm	rw	y	
66	7	BDC2 FGS User Window Size	32-bit integer	20 to 2980 mm	0mm	rw	y	
66	8	BDC2 Auto-Thresholding	8-bit Uinteger	0 = Slow, 1 = Medium, 2 = Fast	1	rw	y	
67		Status						
67	1	Measurement 1 Value (distance in mm)	32-bit integer			ro		
67	2	Excess Gain	32-bit integer			ro		
67	3	Stability	8-bit Uinteger	0=No target, 1=Marginal/ Multiple Peaks, 2=Stable		ro		
67	4	Emitter Status	8-bit Uinteger	0 = Active, 1 = Inactive		ro		
67	5	Temperature (in 0.1 °C)	16-bit integer			ro		
67	6	Last Taught Temperature (in 0.1 °C)	16-bit integer			ro		
71		Pulse Frequency Configuration						
71	1	Near Frequency	32-bit integer	1 to 100000 Hz	100Hz	rw	y	
71	2	Far Frequency	32-bit integer	1 to 100000 Hz	600Hz	rw	y	
78		Pulse Frequency Setpoints						
78	1	Setpoint SP1	32-bit integer	20 to 3000 mm		rw	y	
	2	Setpoint SP2	32-bit integer	20 to 3000 mm		rw	y	
79	1	Pulse Frequency LOS Frequency	32-bit Uinteger	1 to 100000 Hz	50Hz	rw	y	
16512		MDC Descriptor		Measuring Data Channel Descriptor - Smart Sensor Profile 2nd Edition				
16512	1	Lower Limit	32-bit integer			ro		
16512	2	Upper Limit	32-bit integer			ro		
16512	3	Unit	16-bit uinteger	1010 = m		ro		
16512	4	Scale	8-bit integer	-3 = range shift of $(10)^{-3}$		ro		

IO-Link Events for the Q2XKLAF Model

Events are acyclic transmissions from the IO-Link device to the IO-Link master. Events can be error messages and/or warning or maintenance data.

IO-Link events

Code	Type	Name	Description
25376 (0x6320)	Error	Parameter error	Check datasheet and values
36003 (0x8CA3)	Notification	Teach Completed Event	Event indicating a teach has been completed.
36004 (0x8CA4)	Notification	Factory Settings Restored Event	Event indicating that the factory settings have been restored.

Continued on page 27

© Banner Engineering Corp. All rights reserved.
www.bannerengineering.com

Continued from page 26

Code	Type	Name	Description
36005 (0x8CA5)	Notification	Teach Coerced Event	Event indicating a taught condition resulting in a setpoint being coerced. Taught was updated.
36007 (0x8CA7)	Notification	Teach Failed Event	Event indicating an invalid target condition was attempted to be taught. Taught setpoint was not updated.
36097 (0x8D01)	Error	System Fault Event	Contact Banner Engineering to resolve.

© Banner Engineering Corp. All rights reserved.
www.bannerengineering.com

Chapter Contents

Cordsets 28
Brackets 29

Chapter 5 Accessories

Cordsets

4-pin Single-Ended M8 Female Cordsets (datasheet p/n 236623)				
Model	**Length**	**Dimensions (mm)**	**Pinout (Female)**	
BC-M8F4-24-0.5	0.5 m (1.64 ft)	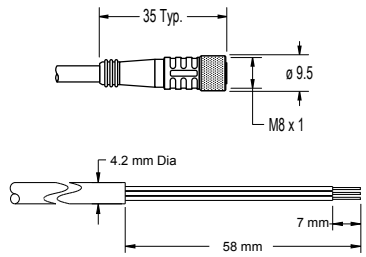	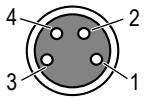	1 = Brown 2 = White 3 = Blue 4 = Black
BC-M8F4-24-1	1 m (3.28 ft)			
BC-M8F4-24-2	2 m (6.56 ft)			
BC-M8F4-24-5	5 m (16.4 ft)			
BC-M8F4-24-8	8 m (26.25 ft)			
BC-M8F4-24-10	10 m (30.81 ft)			

4-pin Single-Ended M12 Female Cordsets (datasheet p/n 235937)				
Model	**Length**	**Dimensions (mm)**	**Pinout (Female)**	
BC-M12F4-22-1	1 m (3.28 ft)	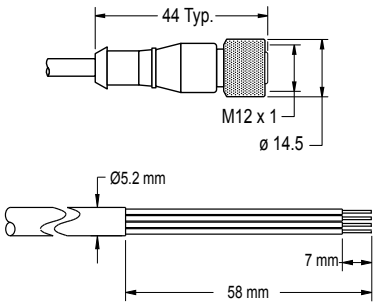	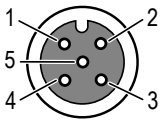	1 = Brown 2 = White 3 = Blue 4 = Black 5 = Unused
BC-M12F4-22-2	2 m (6.56 ft)			
BC-M12F4-22-5	5 m (16.4 ft)			
BC-M12F4-22-8	8 m (26.25 ft)			
BC-M12F4-22-10	10 m (30.81 ft)			
BC-M12F4-22-15	15 m (49.2 ft)			
BC-M12F4-22-20	20 m (65.61 ft)			
BC-M12F4-22-25	25 m (82.02 ft)			
BC-M12F4-22-30	30 m (98.42 ft)			

4-pin Single-Ended M12 Female Right-Angle Cordsets (datasheet p/n 235937)				
Model	**Length**	**Dimensions (mm)**	**Pinout (Female)**	
BC-M12F4A-22-1	1 m (3.28 ft)	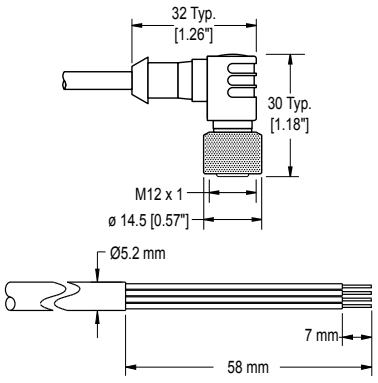	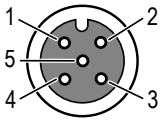	1 = Brown 2 = White 3 = Blue 4 = Black 5 = Unused
BC-M12F4A-22-2	2 m (6.56 ft)			
BC-M12F4A-22-5	5 m (16.4 ft)			
BC-M12F4A-22-8	8 m (26.25 ft)			
BC-M12F4A-22-10	10 m (30.81 ft)			
BC-M12F4A-22-15	15 m (49.2 ft)			

© Banner Engineering Corp. All rights reserved.
www.bannerengineering.com

Brackets

All measurements are listed in millimeters, unless noted otherwise. The measurements provided are subject to change.

SMBQ2XA

- Vertical L-shaped bracket
- 20-ga stainless steel
- CAD Files: DXF, PDF, IGS, STP

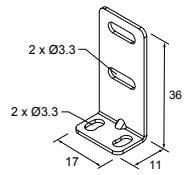

SMBQ2XB

- Rear L-shaped bracket
- 20-ga stainless steel
- CAD Files: DXF, PDF, IGS, STP

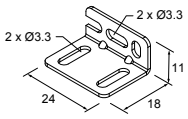

SMBQ20FA

- Includes 3/8-16 × 2 in socket head cap screw (SHCS)
- 304 stainless steel
- CAD Files: DXF, PDF, IGS, STP

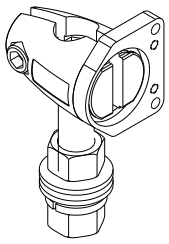

SMBQ20FAM10

- Kit for 10 mm (3/8 in) Rod Bracket Systems for Q2X, Q20, Q12, VS1, VS3, VS8
- Includes M10-1.5 x 50 mm Socket Head Cap Screw (SHCS)
- CAD Files: DXF, PDF, IGS, STP

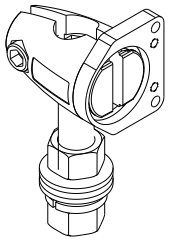

SMBQ20FAM12

- Kit for 12 mm (1/2 in) Rod Bracket Systems for Q2X, Q20, Q12, VS1, VS3, VS8
- No socket head cap screw (SHCS) included
- CAD Files: DXF, PDF, IGS, STP

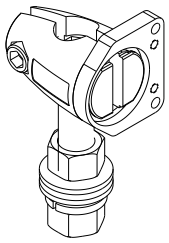

© Banner Engineering Corp. All rights reserved.
www.bannerengineering.com

Chapter Contents

Restoring Factory Defaults 30
Clean with Mild Detergent and Warm Water 30
Repairs 30
Banner Engineering Corp Limited Warranty 30

Chapter 6 Product Support and Maintenance

Restoring Factory Defaults

To restore factory default settings:

- 8-pulse the remote wire, or
- Press the TEACH button eight times.

After the factory default settings are restored, both LEDs flash eight times.

Clean with Mild Detergent and Warm Water

Handle the sensor with care during installation and operation. Sensor windows soiled by fingerprints, dust, water, oil, etc. create stray light that may degrade the peak performance of the sensor.

Wipe down the device with a soft cloth dampened with a mild detergent and warm water solution. Do not use any other chemicals for cleaning.

Repairs

Contact Banner Engineering for troubleshooting of this device. **Do not attempt any repairs to this Banner device; it contains no field-replaceable parts or components.** If the device, device part, or device component is determined to be defective by a Banner Applications Engineer, they will advise you of Banner's RMA (Return Merchandise Authorization) procedure.

> **IMPORTANT:** If instructed to return the device, pack it with care. Damage that occurs in return shipping is not covered by warranty.

Banner Engineering Corp Limited Warranty

Banner Engineering Corp. warrants its products to be free from defects in material and workmanship for one year following the date of shipment. Banner Engineering Corp. will repair or replace, free of charge, any product of its manufacture which, at the time it is returned to the factory, is found to have been defective during the warranty period. This warranty does not cover damage or liability for misuse, abuse, or the improper application or installation of the Banner product.

THIS LIMITED WARRANTY IS EXCLUSIVE AND IN LIEU OF ALL OTHER WARRANTIES WHETHER EXPRESS OR IMPLIED (INCLUDING, WITHOUT LIMITATION, ANY WARRANTY OF MERCHANTABILITY OR FITNESS FOR A PARTICULAR PURPOSE), AND WHETHER ARISING UNDER COURSE OF PERFORMANCE, COURSE OF DEALING OR TRADE USAGE.

This Warranty is exclusive and limited to repair or, at the discretion of Banner Engineering Corp., replacement. **IN NO EVENT SHALL BANNER ENGINEERING CORP. BE LIABLE TO BUYER OR ANY OTHER PERSON OR ENTITY FOR ANY EXTRA COSTS, EXPENSES, LOSSES, LOSS OF PROFITS, OR ANY INCIDENTAL, CONSEQUENTIAL OR SPECIAL DAMAGES RESULTING FROM ANY PRODUCT DEFECT OR FROM THE USE OR INABILITY TO USE THE PRODUCT, WHETHER ARISING IN CONTRACT OR WARRANTY, STATUTE, TORT, STRICT LIABILITY, NEGLIGENCE, OR OTHERWISE.**

Banner Engineering Corp. reserves the right to change, modify or improve the design of the product without assuming any obligations or liabilities relating to any product previously manufactured by Banner Engineering Corp. Any misuse, abuse, or improper application or installation of this product or use of the product for personal protection applications when the product is identified as not intended for such purposes will void the product warranty. Any modifications to this product without prior express approval by Banner Engineering Corp will void the product warranties. All specifications published in this document are subject to change; Banner reserves the right to modify product specifications or update documentation at any time. Specifications and product information in English supersede that which is provided in any other language. For the most recent version of any documentation, refer to: www.bannerengineering.com.

For patent information, see www.bannerengineering.com/patents.

© Banner Engineering Corp. All rights reserved.
www.bannerengineering.com

LinkedIn

X

Facebook

Instagram



© 2026. All rights reserved.