BMHPS Heated Enclosure Power Supply

Power Transformer for Heated Enclosure Windows



Models

Model Number	Description	Primary	Secondary
BMHPS4	Power Supply for Two BMHE4 Enclosures	105 to 130V ac	23V ac
BMHPS5	Power Supply for Two BMHE5 Enclosures		27V ac
BMHPS6	Power Supply for Two BMHE6 Enclosures		29V ac
BMHPS6-74232	Power Supply for Two BMHE6 Enclosures	210 to 230V ac	

Connections

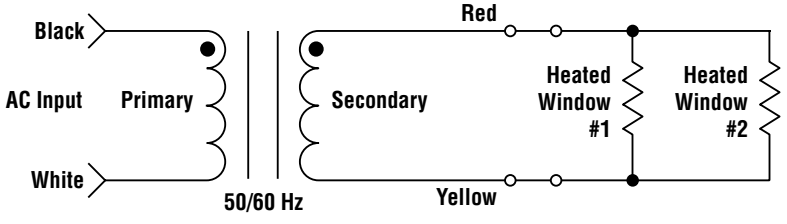

Dimensions

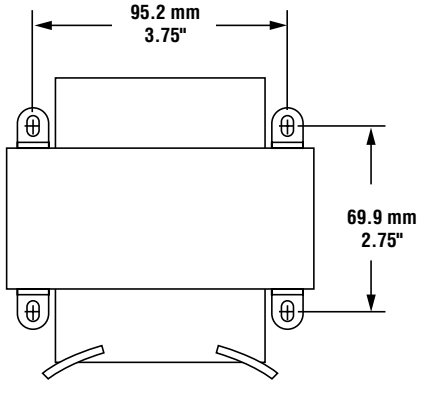

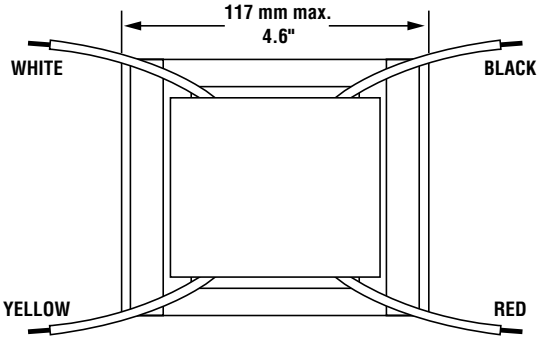

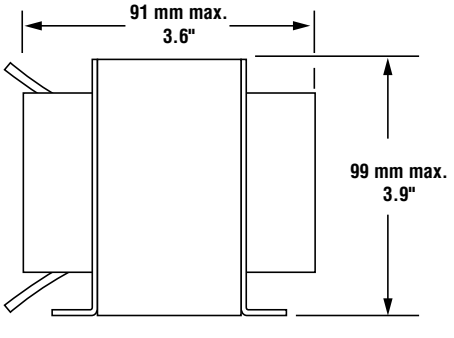

Printed in USA 05/05 P/N 55555 rev. B

Banner Engineering Corp., 9714 Tenth Ave. No., Minneapolis, MN 55441 • Phone: 763.544.3164 • www.bannerengineering.com • Email: sensors@baneng.com

ПРОМЭЛЕКТРОНИКА/ sales@prom-elec.com