Lighting Controller System Product Manual

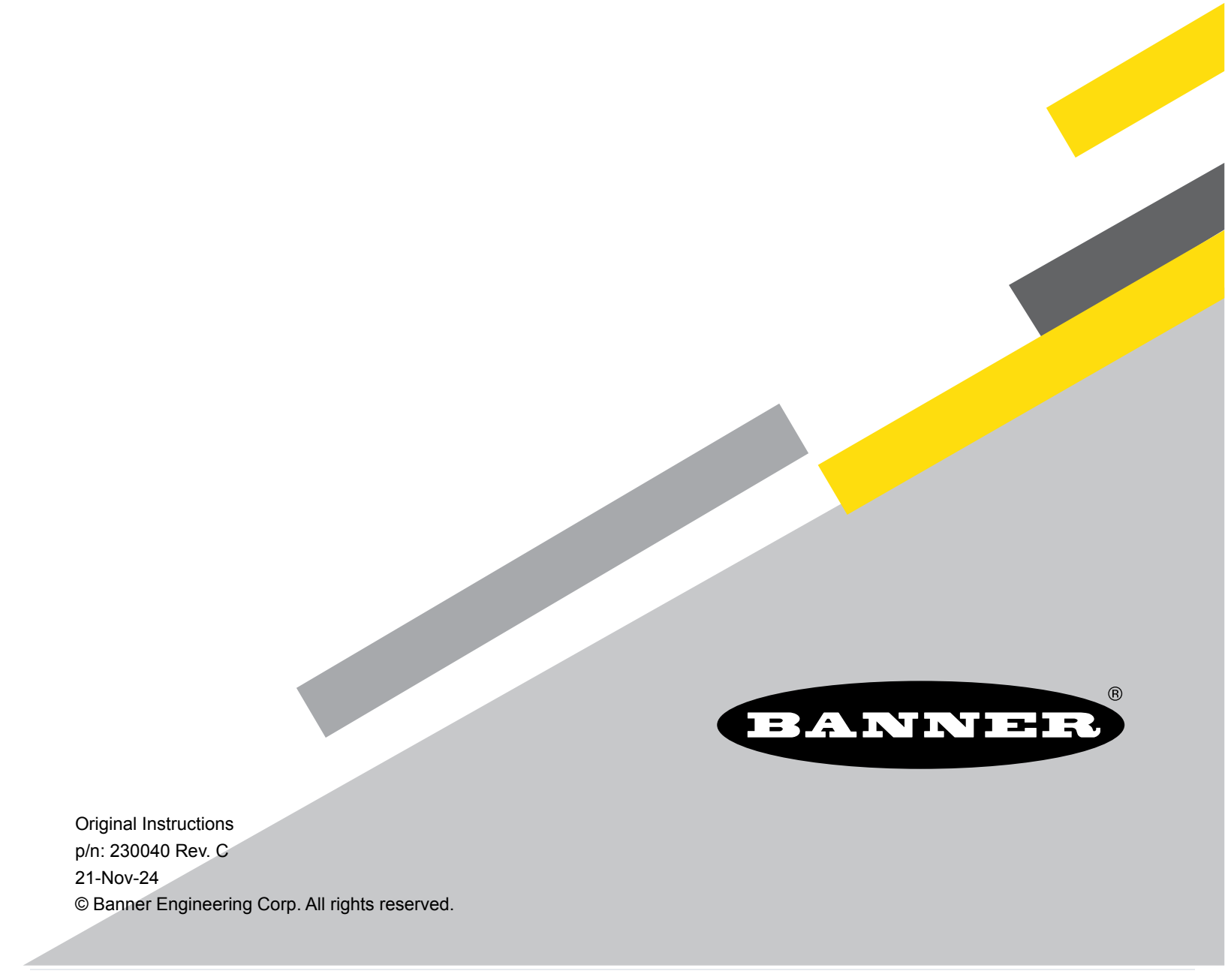

Original Instructions
p/n: 230040 Rev. C
21-Nov-24
© Banner Engineering Corp. All rights reserved.

ПРОМЭЛЕКТРОНИКА/ sales@prom-elec.com

Contents

Chapter 1 Features

Model 3
Overview 3

Chapter 2 Wiring 4

Chapter 3 Specifications

Dimensions 6

Chapter 4 Product Support and Maintenance

Clean with Mild Detergent and Water 7
Repairs 7
Contact Us 7
Banner Engineering Corp Limited Warranty 7

© Banner Engineering Corp. All rights reserved.

Chapter Contents

Model 3
Overview 3

Chapter 1 Features

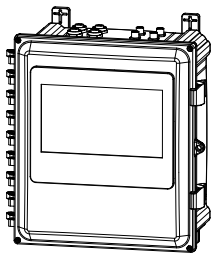

- Power and dimming control for multiple zones
- Simplify the installation and implementation of a lighting and inspection control system
- Reduce integration time and expense
- 10.2 inch (259 mm) touchscreen interface
- Multi-level password protection

Model

Model	Description
LCS10	Lighting Controller System with HMI Screen Interface, 4 Zones

Overview

The LCS10 Lighting Control System controls four separate zones individually, which is done using the HMI color touchscreen. Each zone has a dedicated 3-pin 7/8 in-16UNF connector for power and a 4-pin M12 connector for dimming integrated into the polycarbonate enclosure.

Mounting brackets are included.

© Banner Engineering Corp. All rights reserved.

Chapter Contents

Chapter 2 Wiring

Power Connection – 3-pin 7/8 in-16UNF Pinout

Diagram (Female)	Pin	Description
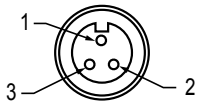	1	Ground
	2	Neutral
	3	Line/Hot

Dimming Connection – 4-pin M12 Pinout

Diagram (Female)	Pin	Description
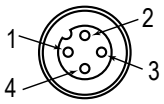	1	Not Connected
	2	Not Connected
	3	Dim (-)
	4	Dim (+)

© Banner Engineering Corp. All rights reserved.

Chapter Contents

Dimensions..... 6

Chapter 3 Specifications

Supply Voltage
120 V AC to 277 V AC

Supply Current
HMI/Controller: 375 mA typical
Lighting zone: 15 A maximum per zone

HMI Screen
10.2 inch (259 mm) diagonal
1024 × 768 resolution
Color LED backlight

Dimming and Control
Each dimming zone provides 0 V to 10 V of analog LED dimming, dimmable to 5% intensity
50 mA sink capacity per zone

Construction
Housing: Polycarbonate

Mounting
(4) M8 × 1.37 threaded mounting holes

Connections
(4) Integral 3-pin 7/8 in-16UNF female quick-disconnect connectors
(4) Integral 4-pin M12 female quick-disconnect connectors
Input power provided by installer

Environmental Rating
IP20

Operating Temperature
0 °C to +50 °C (+32 °F to +122 °F)

Storage Temperature
–40 °C to +70 °C (–40 °F to +158 °F)

Password
333

Required Overcurrent Protection

WARNING: Electrical connections must be made by qualified personnel in accordance with local and national electrical codes and regulations.

Overcurrent protection is required to be provided by end product application per the supplied table.

Overcurrent protection may be provided with external fusing or via Current Limiting, Class 2 Power Supply.

Supply wiring leads < 24 AWG shall not be spliced.

For additional product support, go to www.bannerengineering.com.

Supply Wiring (AWG)	Required Overcurrent Protection (A)	Supply Wiring (AWG)	Required Overcurrent Protection (A)
20	5.0	26	1.0
22	3.0	28	0.8
24	1.0	30	0.5

Certifications

c UL us LISTED IND. CONT. EQ. E316212

© Banner Engineering Corp. All rights reserved.

Dimensions

All measurements are listed in millimeters [inches], unless noted otherwise. The measurements provided are subject to change.

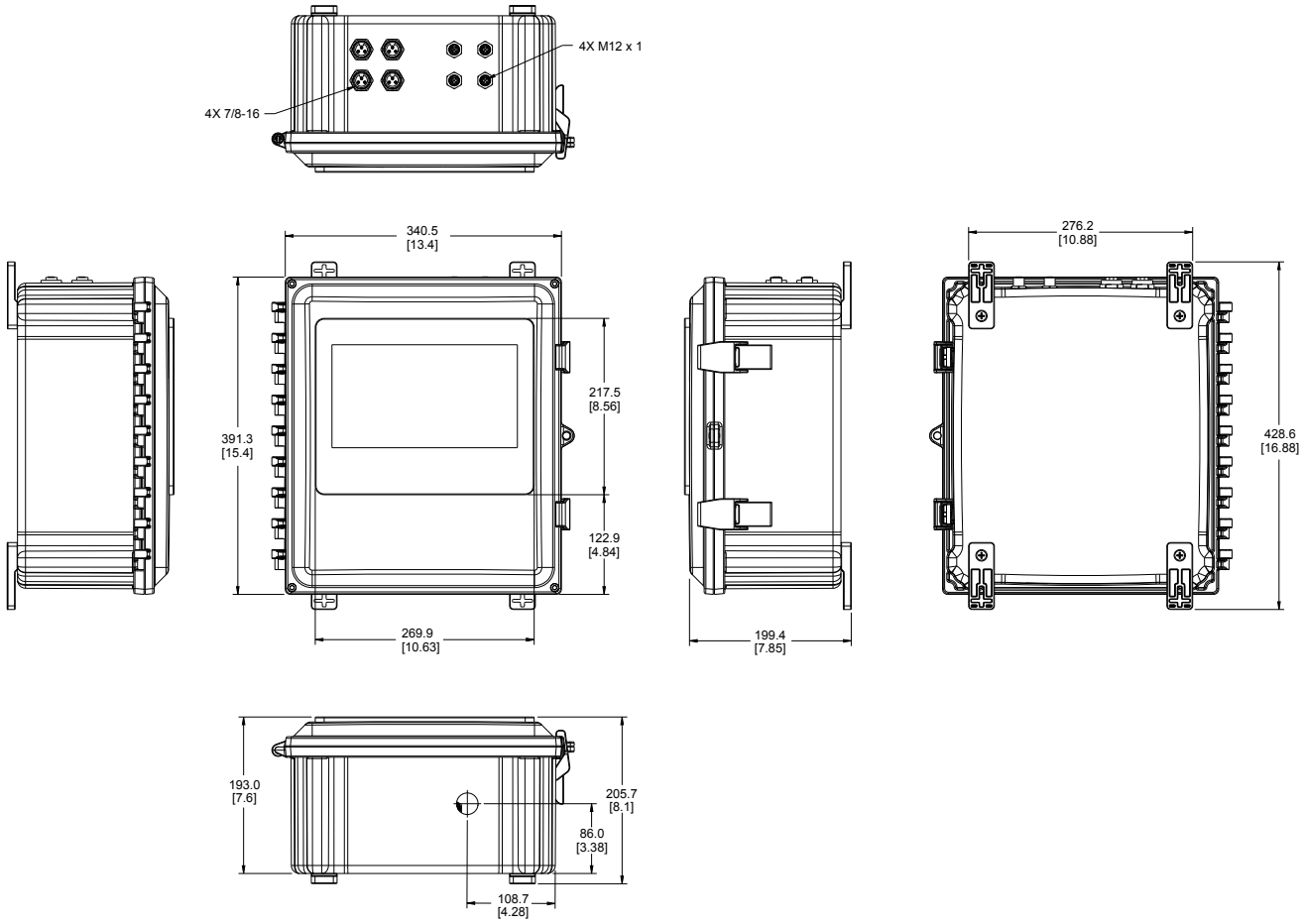

© Banner Engineering Corp. All rights reserved.

Chapter Contents

Clean with Mild Detergent and Water 7
Repairs 7
Contact Us 7
Banner Engineering Corp Limited Warranty 7

Chapter 4 Product Support and Maintenance

Clean with Mild Detergent and Water

Wipe down the polycarbonate enclosure and the display with a soft cloth that has been dampened with a mild detergent and warm water solution.

Repairs

Contact Banner Engineering for troubleshooting of this device. **Do not attempt any repairs to this Banner device; it contains no field-replaceable parts or components.** If the device, device part, or device component is determined to be defective by a Banner Applications Engineer, they will advise you of Banner's RMA (Return Merchandise Authorization) procedure.

> **IMPORTANT:** If instructed to return the device, pack it with care. Damage that occurs in return shipping is not covered by warranty.

Contact Us

Banner Engineering Corp. headquarters is located at: 9714 Tenth Avenue North | Plymouth, MN 55441, USA | Phone: + 1 888 373 6767

For worldwide locations and local representatives, visit www.bannerengineering.com.

Banner Engineering Corp Limited Warranty

Banner Engineering Corp. warrants its products to be free from defects in material and workmanship for one year following the date of shipment. Banner Engineering Corp. will repair or replace, free of charge, any product of its manufacture which, at the time it is returned to the factory, is found to have been defective during the warranty period. This warranty does not cover damage or liability for misuse, abuse, or the improper application or installation of the Banner product.

THIS LIMITED WARRANTY IS EXCLUSIVE AND IN LIEU OF ALL OTHER WARRANTIES WHETHER EXPRESS OR IMPLIED (INCLUDING, WITHOUT LIMITATION, ANY WARRANTY OF MERCHANTABILITY OR FITNESS FOR A PARTICULAR PURPOSE), AND WHETHER ARISING UNDER COURSE OF PERFORMANCE, COURSE OF DEALING OR TRADE USAGE.

This Warranty is exclusive and limited to repair or, at the discretion of Banner Engineering Corp., replacement. **IN NO EVENT SHALL BANNER ENGINEERING CORP. BE LIABLE TO BUYER OR ANY OTHER PERSON OR ENTITY FOR ANY EXTRA COSTS, EXPENSES, LOSSES, LOSS OF PROFITS, OR ANY INCIDENTAL, CONSEQUENTIAL OR SPECIAL DAMAGES RESULTING FROM ANY PRODUCT DEFECT OR FROM THE USE OR INABILITY TO USE THE PRODUCT, WHETHER ARISING IN CONTRACT OR WARRANTY, STATUTE, TORT, STRICT LIABILITY, NEGLIGENCE, OR OTHERWISE.**

Banner Engineering Corp. reserves the right to change, modify or improve the design of the product without assuming any obligations or liabilities relating to any product previously manufactured by Banner Engineering Corp. Any misuse, abuse, or improper application or installation of this product or use of the product for personal protection applications when the product is identified as not intended for such purposes will void the product warranty. Any modifications to this product without prior express approval by Banner Engineering Corp will void the product warranties. All specifications published in this document are subject to change; Banner reserves the right to modify product specifications or update documentation at any time. Specifications and product information in English supersede that which is provided in any other language. For the most recent version of any documentation, refer to: www.bannerengineering.com.

For patent information, see www.bannerengineering.com/patents.

© Banner Engineering Corp. All rights reserved.

LinkedIn

X (formerly Twitter)

Facebook



© 2024. All rights reserved.
www.bannerengineering.com